Town of Needham
Department of Public Works – Administration
Public Services Administration Building
500 Dedham Avenue
Needham, Massachusetts 02492
Telephone (781) 455-7550 X319

ACKNOWLEDGEMENT OF RECEIPT

Release Date	July 2, 2013
Bid Title	16-Inch Water Main Replacement
Bid Number	14DPW038C
Number of Documents	The Bid Package consists of 1PDF documents. Returning this form confirms receipt of all the documents.
Pre-Bid Meeting	10am, July 11, 2013 @ PSAB
Questions Due	July 12, 2013
Bids are Due	2pm, July 18, 2013, Administration Office of the Public Works Department, Public Services Administration Building (PSAB), Second Floor 500 Dedham Avenue, Needham, Massachusetts, 02492

Please provide the requested information below as acknowledgment that you have received our bid package noted above. It is **recommended** that interested bidders complete this **acknowledgment and return via Fax to the Department of Public Works (781) 449-9023** or by mail. Only by doing this, will the Town be able to provide notification of any addenda or answered questions relating to this bid. **Only those companies or individuals shown on the Distribution Register will receive addenda to this bid. By completing and returning this acknowledgement will ensure you are recorded on the Distribution Register.** Proposals from companies or individuals **not** acknowledging the addenda may be rejected as **not responsive.**

Name of Company or Individual **(Print)**	
Name / Title of Contact **(Print)**	
Address (line 1) **(Print)**	
Address (line 2) **(Print)**	
Telephone Number	
Fax Number	
E-mail Address **(Print)**	
Signature	
Date	

* Any hand delivery or facsimile received after the due date and time will not be addressed. Please allow enough time for hand delivery or facsimile transmissions.

TOWN OF NEEDHAM MASSACHUSETTS
Department of Public Works

16-Inch Water Main Replacement
IFB 14DPW038C

Released Date Tuesday 2 July 2013

Pre-Bid Meeting – 10:00 A.M. Thursday 11 July 2013
Deadline for Questions – 5:00 P.M. Friday 12 July 2013
Plans and Specs Available until Bid Closing

Bids Due
2:00 P.M. Thursday 18 July 2013

COMMONWEALTH OF MASSACHUSETTS
MICHAEL R. HORNIG
CIVIL
No. 45185
REGISTERED PROFESSIONAL ENGINEER
7-1-13

Prepared by:

BETA Group, Inc.
Engineers • Planners • Landscape Architects • Scientists

TABLE OF CONTENTS

Invitation to Bid		i to ii
Section 1	Information for Bidders	1 to 7
Section 2	Proposal	1 to 28
Section 3	Contract Agreement	1 to 37
Section 4	General Specifications	1 to 6
Section 5	Earthwork	1 to 46
Section 6	Water Contract Specifications	1 to 24
Section 7	Drainage Contract Specifications	1 to 14
Section 8	Sewer Contract Specifications	1 to 55
Section 9	Roadway Specifications	1 to 40
Section 10	Tree Protection, Pruning and Fertilizing	1 to8
Section 11	Lawns and Planting	1 to 26
Section 12	New Lighting/Electrical/Traffic Signals	1 to 16
Section 13	Street Lighting System Specifications	1 to 9

INVITATION TO BID
GENERAL CONTRACT FOR

Project Name: **16-Inch Water Main Replacement**

Contract No.: **IFB 14DPW038C**

Project Description: Unit Price Contract Bid (see Sect. 3.1, Art. I) to Furnish labor, materials and equipment necessary for installing approximately 2,900 feet of 16" ductile iron water main, gate valves, services, and hydrants.

The Town of Needham, Massachusetts invites sealed bids for the **16- Inch Water Main Replacement** in accordance with the Bid Documents prepared by BETA Group, Inc.

Sealed General Contract Bids for the above described Project will be received at the following office until **2:00 P.M.** on **July 18, 2013**:

Department of Public Works
Public Services Administration Building
500 Dedham Avenue (Rte. l35)
Needham, MA 02492

and then will be publicly opened and read aloud at **2:10** pm, in the Charles River Room.

Drawings and Documents are available at the above office or on line **www.needhamma.gov/bids.aspx**.

Bid Deposit : Bid Bond in the amount of 5% or more of bid price.
Surety Bonds: Performance Bond –100% of Contract Price.
Payment Bond - 50% of Contract Price.

A pre-bid meeting will be held on **July 11, 2013 at 10:00 A.M.** at the Public Services Administration Building, 500 Dedham Avenue (Route 135) in the Charles River Room. All bidders are encouraged to attend.

Drawings and Contract Documents are available at he above Office. **Payment in the amount of Twenty Five ($25.00) dollars** and will be required for each set of Drawings and Contract Documents. This is a nonrefundable payment . Payment shall be by cash, company check, treasurer's or cashier's check, or money order payable to the Town of Needham, MA. **You can download and print for Free the Drawings and Contract Documents at http://www.needhamma.gov/bids.aspx**

Insurance Coverage Required.

For construction contracts bid under Chapter 149, Sect 44A, for building projects totaling more than $100,000, all bidders must be pre-qualified under the Massachusetts Executive Office for Administration and Finance, Division of Capital Asset Management (DCAM) Laws regarding Prequalification of Bidders.

For construction projects funded by State funding sources, the Contractor must meet the requirements of Chapter 29, Section 8B of the Massachusetts General Laws whereby each prospective Bidder proposing to bid on any work to be awarded by a municipality under the provisions of Section 37 of Chapter 90, must be pre-qualified in accordance with 720 CMR 5.00..

Massachusetts Labor Laws regarding minimum wage rates and employment conditions apply (see Sect. 3.5).

The right is reserved by the Town Manager of the Town of Needham, to reject any or all bids if it is in the public interest so to do.

TOWN MANAGER
TOWN OF NEEDHAM

SECTION l INFORMATION FOR BIDDERS

Project: **16-Inch Water Main Replacement**

Contract No.: **IFB 14DPW038C**

1.1 GENERAL

1. The Town of Needham, Massachusetts, herein called the Owner, acting through its Town Manager, will receive sealed Bid proposals for the above referenced project. Proposals shall be addressed as follows:

   Department of Public Works
   500 Dedham Avenue (Rte. l35)
   Needham, MA 02492

   All Proposals shall be endorsed with the Project Name and Contract Number on the outside of the sealed envelope and will be received by the above office until **2:00** p.m. on Thursday, **July 18, 2013**, and then will be publicly opened and read aloud at **2:10** pm, in the Chestnut Room at the Public Services Administration Building, 500 Dedham Avenue, Needham, MA 02492.

2. The attention of Bidders is called to those parts of the Contract regarding labor conditions, wage rates, insurance requirements, etc.

3. Statutes regulating competitive bidding in the award of Contract for public works projects as promulgated by the Commonwealth of Massachusetts shall govern the process of Bidding and Contract Award on this project.

4. Contractors are advised that this project **is _X_ is not___**funded by State funding sources. Bids for construction projects funded by State funding sources must met the requirements of Chapter 29, Section 8B of the Massachusetts General Laws whereby each prospective Bidder proposing to bid on any work to be awarded by a municipality under the provisions of Section 37 of Chapter 90, must be prequalified in accordance with 720 CMR 5.00. Contractor pre-qualification forms can be obtained from the Massachusetts Department of Transportation. (MassDOT). Form can be found at http://www.mhd.state.ma.us/downloads/prequalcontractors/R109.pdf and e-mailed completed form to MassDOT at prequel.r109@state.ma.us.

5. Contractors are advised that this project does___ does not_X_ qualify as a building contract under M.G.L., Ch. 149. Any contract that qualifies as a contract under M.G.L, Ch. 149 requires that all bidders must be pre-qualified by the Massachusetts Executive Office for Administration and Finance, Division of Capital Asset Management (DCAM) .

6. Contractors are advised that this project does_X_does not___ qualify as a construction contract under M.G.L., Ch.30, Sec. 39M and is subject to its provisions and all other provisions of law related thereto.

1.2 EXISTING CONDITIONS

l. Bidders are required to submit their proposals upon the following express conditions, which shall apply to and become a part of every bid received, viz:

a. Bidders must satisfy themselves by personal examination of the location of the proposed work and by such other means as they may desire, as to actual conditions and requirements of the work.

b. The locations of existing equipment and/or structures within the project area are shown on the drawings in accordance with the best available information in the Owner's possession. Other drawings of the work site are available for reference at the above referenced office. The completeness and accuracy of said information is not guaranteed and the Contractor shall have no grounds for additional compensation because of excessive expense due to encountering any existing pipes, conduits or other structural features.

c. Bidders shall, upon observation of discrepancies in observed field conditions and conditions shown on the contract documents, notify the Engineer in writing at least five (5) days before the advertised openings of bids.

1.3 CONTRACT DOCUMENTS

l. Detailed Contract Drawings, Form for Proposals, Form of Contract, Form of Bond and Special Provisions, herein referred to as the Specifications, may be obtained at the office referenced in the “Invitation to Bid”.

2. Drawings and Contract Documents are available at he above Office. **Payment in the amount of Twenty Five Dollars ($25.00) dollars** will be required for each set of Drawings and Contract Documents. This is a **non-refundable payment**. Payment shall be by cash, company check, treasurer's or cashier's check, or money order payable to the Town of Needham, MA. You can download and print for Free the Drawings and Contract Documents at http://www.needhamma.gov/bids.aspx

.

3. The general characteristics and principal details are shown on a set of contract drawings entitled, **"16 - Inch Water Main Replacement"** and are hereby incorporated into these Specifications by reference.

1.4 QUESTIONS REGARDING SPECIFICATIONS

l. Any questions regarding the intent or meaning of the specifications and the equality or use of products or methods, other than those definitely designated or described on the drawings or in the specifications, shall be submitted in writing by the bidders to the Town Engineer in care of the Director of Public Works, 470 Dedham Avenue, Needham, MA 02492, together with drawings, detailed specifications or other data in sufficient detail to enable the Engineer to determine the equality of the product or method, at least five (5) days before the advertised openings of bids.

2. The Engineer shall arrange as addenda, which shall become a part of the contract and specifications, all questions so received with his decision regarding each, and he shall send a copy of these addenda to each of the Bidders who have taken out plans and specifications, at least three (3) days prior to said opening of bids.

3. Unless such action shall have been taken by the Bidder and approval obtained, the Bidder agrees to use the product or method designated or described in the specifications.

1.5 GENERAL BIDS

l. All Bids must be upon the blank Form for Proposal annexed hereto, give the price for each item of work proposed, both in words and figures, and be signed by the Bidder with his business address, business telephone number, facsimile number, email address, and place of residence.

2. Bid Security

a. Each Bid must be accompanied by a Bid Bond for not less than 5% (five percent) of the bid price, with a surety company satisfactory to the Owner, payable to the Town of Needham, MA, said Bid Bond to be returned to the Bidder unless forfeited under the conditions herein stipulated. The Bid Bond should be enclosed in the sealed envelope containing the Bid. Such Bid Bond will be returned to all except the three lowest responsible and eligible Bidders within five days, Saturdays, Sundays and legal holidays excluded, after the formal opening of the bids.

b. The remaining Bid Bonds will be returned to the three lowest responsible and eligible Bidders within three days after the Owner and the accepted Bidder have executed the Contract. If no Contract has been so executed within 30 days after the date of the opening of bids, the bid security will be returned at any time thereafter upon demand of the Bidder so long as he has not been notified of the acceptance of his bid.

c. If all Bids are rejected, bid security will be returned forthwith.

3. Bids may be withdrawn at any time prior to the designated time for the opening of bids.

4. Bids will be compared on the basis of the sum of the "Total Item Bid" entries stated in the Proposal, and all addenda. In the event that there is a discrepancy between the item bid price written in words and written in figures, the price written in words shall govern (see Sect. 3.1, Art I- definitions: Unit Price Contract).

5. The Bidder shall state in his Proposal the number of calendar days within which he will complete the work if he is awarded the Contract. If the Contractor proposes to suspend work during the winter season, the number of calendar days shall include the duration of the suspended work. Under no conditions shall the winter shutdown period exceed 120 calendar days.

6. The Owner may reject as informal, Bids which are incomplete, conditional, or obscure, or which contain additions not called for, erasures not properly initialed, alterations, or irregularities of any kind; or the Owner may waive such informalities.

7. A Contract for performance of the work shall be awarded by the Town of Needham, acting through its Town Manager, to the lowest responsive, responsible and eligible Bidder. Consideration of time for completion and equipment proposed may be considered in selecting the lowest responsive, responsible and eligible Bidder. Any and all proposals may be rejected whenever the Town Manager determines the interests of the Town so require.

1.6 CONTRACT AWARD

l. It is the purpose of the Owner not to award this contract to any Bidder who does not furnish satisfactory evidence that he has ability and experience in this class of work, and that he has sufficient capital and plant to enable him to prosecute the same successfully and to complete it in the time named in the Contract.

The Bidder is required to state what work of a similar character to that required in the proposed Contract. The contractor must have completed 10 similar projects within the past Five (5) years, together with references, on the form provided herein.

2. A bond in the sum of the full amount of the Proposal, with a surety company satisfactory to the Owner, as surety will be required for the faithful performance of the Contract. A Payment Bond in the sum of fifty percent (50%) of the Proposal, with a surety company satisfactory to the Owner, as surety will be required for the faithful payment by the Contractor of all subcontractors, materials suppliers and other obligations of the Contractor associated with this Contract. Said Bonds shall be in accordance with form Bonds appearing in Section 3-2, shall contain no other provisions and shall be subject to the approval of Town Counsel.

3. The party to whom the Contract is awarded will be required to present forthwith the name of the surety company to be offered and to execute the Contract and furnish the bond duly executed by a satisfactory surety company, within the time limit stated in the Proposal after notification that the Contract is ready for signature.

4. In case the party to whom the Contract is awarded shall fail or neglect to execute the Contract and furnish satisfactory bonds within the time specified in Section 2, the Owner may determine that the Bidder has abandoned the Contract and thereupon the Proposal and acceptance shall be null and void, and the surety accompanying the Proposal shall be forfeited to and retained by the said Owner as

liquidated damages for such failure or neglect, and to indemnify said Owner for any loss which may be sustained by failure of the Bidder to execute the Contract and furnish bond as aforesaid. After the execution of the Contract and acceptance of the Bond by the Owner, the Surety Bond accompanying the Proposal of the successful Bidder shall be returned.

5. Equipment or materials proposed shall be such that it will fit within the space available and allocated for it and be compatible with existing conditions. Any relocation of existing equipment or structural alterations necessary to suit specific equipment or materials furnished shall be at the expense of the Contractor.

6. All necessary State and Local permits, easements and/or permission to enter upon or occupy private property shall be secured by the Contractor to whom the Contract is Awarded, at his expense. Any assistance the Town may offer in obtaining said permits, easements or permission, shall not absolve the Contractor's responsibility to obtain any permits easements or permission necessary to accomplish the Contract work.

7. The Contractor shall be responsible for scheduling and furnishing all local Police Officers to direct traffic and to keep the traffic off any part of the roadway in which construction is being carried on, or as may, in the opinion of the Engineer, be necessary for such purpose. Arrangements for officers shall be made well in advance of the work schedule for each day. The Contractor shall submit payments for details from the Needham Police Department directly to the Treasurer's office and supply copies of receipted invoices to the Department of Public Works as proof of payment. The Contractor shall submit payments for details from other State or local municipalities at the location designated by each municipality and supply copies of receipted invoices to the Department of Public Works as proof of payment. If for any reason the Contractor cancels work for that day, and the Needham Police Department is not given advance notice, the Contractor will be responsible for that officer's wages. Otherwise, the Owner will reimburse the Contractor for all other police details.

8. Coordination with private utilities is the sole responsibility of the Contractor (including natural gas, electricity, telephone, cable, etc.). The Contractor shall be responsible for notifying *Dig Safe* prior to the start of work. Any assistance the Town may offer in coordinating with private utilities shall not absolve the Contractor's

responsibility to coordinate with private utilities as necessary to accomplish the Contract work.

9. Coordination with public utilities is the sole responsibility of the Contractor (including water, sewer and drain). Any assistance the Town may offer in coordinating with public utilities shall not absolve the Contractor's responsibility to coordinate with private utilities as necessary to accomplish the Contract work.

10. The Contractor shall obtain a Street Occupancy Permit from the Department of Public Works Administration Division for projects on public ways. All fees, bonds and insurance required under this permit shall be waived by this Contract.

11. The Contractor shall read and be fully knowledgeable about the contract provisions, plans and specifications of this Contract. Failure to do so will not absolve the Contractor from all responsibilities and requirements of this Contract.

SECTION 2 PROPOSAL

Project Name: **16-Inch Water Main Replacement**

Contract No.: **14DPW038C**

To: Town of Needham, Massachusetts, herein called the Owner, acting through its Town Manager.

The undersigned, as bidder and herein referred to as singular and masculine, declares that the only parties interested in this Proposal, as Principals, are named herein; that this Proposal is made without collusion with any other person, firm, or corporation; that no officer or agent of the Owner is directly or indirectly interested in this bid; that he has carefully examined the location of the proposed work, the annexed proposed form of the Contract, and the Drawings and Specifications therein referred to and he proposes and agrees that if the Proposal is accepted, he will Contract with the Owner, in the form of the copy of the Contract deposited in the office of the Engineer, and attached hereto, to provide all necessary machinery, tools, apparatus and other means of construction, and to do all the work and furnish all the materials specified in this Contract in the manner and time therein prescribed and according to the requirements of the Engineer as therein set forth and that he will take in payment for each item of work the unit prices set forth by him on the Unit Price Bid Sheets attached hereto.

THE FOLLOWING NOTATIONS APPLY TO THE UNIT PRICE BID ITEMS:

1. The estimated quantities shown on the Unit Price Bid Sheets are an approximate statement of the extent of the work to be done, based upon the estimate of the Engineer: The Owner does not expressly or by implication agree that the quantities shown correspond exactly to the amount of work to be performed, but reserves the exclusive right to increase or decrease the amount of any class or portion of the work, as may be deemed necessary and directed in writing by the Engineer.

   Should the Engineer determine that it is necessary to increase the quantity of any Bid Item more than 10% of the estimated quantity shown on the Unit Price Bid Sheet, the increase shall be governed by the provisions of Sect. 3 Art. XXX – Extra Work.

   Should the Engineer determine that it is necessary to increase the quantity of any Bid Item by less than or equal to 10% of the estimated quantity shown on the Unit Price Bid Sheet, the increase in work shall be paid for at the written bid unit price for that Bid Item.

   Should the Engineer determine that it is necessary to decrease the quantity in any Bid Item, the Engineer shall direct, in writing, a reduction in scope to

the Contract. The Engineer may direct a reduction in scope at any time, up to and including the final estimate and payment.

In the event the actual quantity used is less that the estimated quantity in the Unit Price Bid Sheet, the Contractor shall be paid for the actual amount of units used at the written bid unit price for the Bid Item.

2. Indeterminate: Quantity assumed for purposes of comparison of bids. For all work done under this Item, the undersigned agrees that he will accept in full payment therefore the unit prices stated above.

3. Days for completion as stated by the Bidder in the Proposal.

4. The Owner specifically reserves the right to delete from the Contract, any of the bid items described in the Unit Price Bid Sheets and/or any work as stipulated in Section 1.3- Contract Documents, should, in its opinion, such action be necessary. Such deletion shall be done by written notice to the Contractor.

5. The Owner reserves the right to consider the following in selecting the successful Bidder or rejecting any and all Bids if it is in the best interest of the Town so to do:

- Price
- Date of completion
- Make and model of equipment or materials proposed
- Ability to perform work
- Availability to begin work per Contract (see Sect 3.1, Art. XV)
- Bonding capacity
- Insurance coverage
- References
- Proposed subcontractors (see Sect 3.1 Art XIV)

The Contractor agrees that: Prices quoted in the Proposal shall be held firm until _____ (minimum of 30 days, Saturdays, Sundays and Legal Holidays excluded), unless a Contract has been signed prior to that date.

If this Proposal is accepted by the Owner, the undersigned agrees to complete all work proposed under this Contract and as specified herein within _____ **calendar days** after execution of the Contract and/or the date the Contractor has been notified to commence the work (see Sect. 1.5.5 and Sect 3.1 Art XVII), or if no number of days is set forth above and no notice to proceed is given, 60 days after the award of this Contract, which ever occurs later

For purposes of informal comparison only and not to be considered as part of this Proposal, the total price, derived as described in "Information for Bidders" under Sect 1.5.4, is:

The total proposed Contract price is:

_____DOLLARS_____CENTS
in writing in writing

($_____)

This bid includes addenda numbered _____

NOTE: Pursuant to M.G.L., Ch. 30, Sec. 39M:

The undersigned certifies under penalties of perjury that this bid is in all respects bona fide, fair and made without collusion or fraud with any other person. As used in this paragraph the work "person" shall mean any natural person, joint venture, partnership, corporation or other business or legal entity.

_____
(NAME OF PERSON SIGNING BID)

_____
(COMPANY NAME)

_____
(ADRRESS for PLACE OF BUISSNESS)

_____
(CITY, STATE, ZIP CODE) (PHONE NUMBER)

If this proposal shall be accepted by the Owner, and the undersigned shall fail to contract as aforesaid, and to give a bond prepared on the form provided herein, in the sum of the full amount of the Proposal, with surety satisfactory to the Owner, within twelve days (not including Sunday or a legal holiday) from the date of the mailing of a notice from the Owner to him, according to the address given herewith, that the Contract is ready for signature, then the Owner may by option determine that the bidder has abandoned the Contract and thereupon the proposal and acceptance shall be null and void, and the bid security accompanying this Proposal shall become the property of the Owner; otherwise the accompanying bid security shall be returned to the undersigned.

Signature of bidder, with residence and business address, telephone number, facsimile number, and email address:

_____

_____

_____

Date_____

The names and residences of all persons and parties interested in the foregoing bid, as principals, are as follows:

(Notice - Give first and last name in full, and, in case of corporations, give name of president, treasurer and manager.)

_____

_____

_____

_____

_____

In case this Proposal shall be accepted by the Town Manager:

_____

Name of Surety

is offered as surety for the faithful execution of the Contract.

The bidder is requested to state below what work of a similar character to that included in the proposed contract he has done, and give references that will enable the Owner to judge of his experience, skill and business standing.

Contact	Title	Organization	Phone	Project	Completion Date

The bidder is requested to state below proposed subcontractors for any work to be performed under this Contract (see Sect 3.1, Art XIV), and give references that will enable the Owner to judge of his experience, skill and business standing.

Subcontractor	Type of Work Proposed to be Performed	References

OSHA CERTIFICATION

A Contractor will not be eligible for award of a contract unless such Contractor has submitted the following certification, which is deemed a part of the resulting Contract.

_____ certifies that:
(Name of Authorized Representative)

All employees to be employed at the worksite will have successfully completed a course in construction safety and health approved by the United States Occupational Safety and Health Administration that is at least 10 hours in duration at the time the employee begins work and shall furnish documentation of successful completion of said course with the first certified payroll report for each employee.

_____
Signature of Authorized Representative of Contractor)

_____
(Company Name)

CERTIFICATE OF NON-COLLUSION

The undersigned certifies under penalties of perjury that this bid is in all respects bona fide, fair and made without collusion or fraud with any other person. As used in this paragraph, the word person shall mean any natural person, joint venture, partnership, corporation, or other business or legal entity.

TAX COMPLIANCE CERTIFICATION

Pursuant to M.G.L. c. 62C, Section 49A, I certify under the penalties of perjury that, to the best of my knowledge and belief, I am in compliance with all laws of the Commonwealth relating to taxes, reporting of employees and contractors, and withholding and remitting child support.

Signature of Individual Submitting Bid or Proposal_____

Title:_____

Name of Business:
_____

If a Corporation, State and Date of Incorporation: _____

Address:_____

Telephone:_____

Social Security # or Federal Identification #:
_____

Approval of a contract or other agreement will not be granted unless this certification form is signed by the applicant.

Your Social Security Number or Federal Identification Number will be furnished to the Massachusetts Department of Revenue (DOR) to determine whether you have met tax filing or tax payment obligations. The Town is required to furnish a list to the DOR at the end of its fiscal year, showing the vendors to whom more than $5,000 is paid during the 12 months ending June 30. Providers who fail to correct their non-filing or delinquency will not have a contract or other agreement issued, renewed, or extended. This request is made under the authority of Massachusetts General Laws, Chapter 62C, Section 49a.

CERTIFICATE OF AUTHORIZATION
FOR
BIDDING REPRESENTATIVE

GENERAL CONTRACTOR

(Note: Bidder must complete for certification of authorized representative signing Bid.)

At a duly authorized meeting of the Board of Directors of the _____,
(Name of Corporation)
held on _____, at which all the Directors were present or waived notice, it was
(Date)
voted that _____ _____
(Name of Authorized Representative) (Title)

of this company shall be, and hereby is, authorized to execute bidding documents, contracts and bonds in the name and on behalf of said company, and to affix the corporate seal thereto, and such execution of any contract obligation in this company's name on its behalf of such _____ _____ under seal of the company shall be valid and binding upon this company.
(Title)

A true copy

ATTEST _____

Place of Business _____

_____

I hereby certify that I am the clerk of the _____
(Name of Corporation)

_____, that _____
(Name of Authorized Representative)

is the duly elected _____of said company, and that the above
(Title)
vote has not been amended or rescinded and remains in full force and effect as of the date of this contract.

Corporate
_____ Seal
(Clerk)

BID BOND

KNOW ALL BY THESE PRESENTS, That we,_____

_____ as Principal, hereinafter called the Principal,

And the _____

of _____ , a corporation duly organized under

the laws of the state of _____, as Surety, hereinafter called the surety, are held and

firmly bound unto the **Town of Needham, Massachusetts** as obligee, hereinafter called the obligee, in

the sum of $_____ **(5% of Bid Amount)** , for the payment of which sum well and

truly to be made, the said principal and the said Surety, bind ourselves, our heirs, executors,

administrators, successors and assigns, jointly and severally, firmly by these presents.

WHEREAS, the principal has submitted a bid for_____

_____

NOW, THEREFORE, if the obligee shall accept the bid of the Principal and the Principal shall enter into a contract with the obligee in accordance with the terms of such bid, and give such bond or bonds as may be specified in the bidding Contract Documents with good and sufficient surety for the faithful performance of such contract and for the prompt payment of labor and materials furnished in the prosecution there of, or in the event of the failure of the Principal to enter into such Contract and give such bond or bonds, if the Principal shall pay the obligee the difference not to exceed the penalty hereof between the amount specified in said bid and such larger amount for which the obligee may in good faith contract with another party to perform the work covered by said bid, then this obligation shall be null and void, otherwise to remain in full force and effect.

Signed and sealed this _____ day of _____

_____(Seal)
(Principal – Corporation Name)

_____
(Surety Name)

By_____
(Principle – Signature)

By_____
Attorney-in-Fact (Signature)

_____
(Principle –Print Name)

_____
Attorney-in-Fact (Print Name)

_____
(Title)

Item No.	Qty.	Item Description		
4.11	Reimbursement	POLICE DETAILS – Prearranged and PAID by Contractor		
Fourty-Five Thousand Dollars and No Cents			$45,000.00	$45,000.00
Unit Price in Writing Dollars and Cents			Unit Price	Total Item Bid
5.2.3a	400	L.F HAY BALES		
			$	$
Unit Price in Writing Dollars and Cents			Unit Price	Total Item Bid
5.2.3b	400	L.F. SILT FENCE		
			$	$
Unit Price in Writing Dollars and Cents			Unit Price	Total Item Bid
5.3.4a	0	AC. CLEARING AND GRUBBING		
			$	$
Unit Price in Writing Dollars and Cents			Unit Price	Total Item Bid
5.3.4b	0	AC. SELECTIVE CLEARING AND THINNING		
			$	$
Unit Price in Writing Dollars and Cents			Unit Price	Total Item Bid
5.3.4c	0	EA TREE REMOVED (DIAMETER UNDER 24”)		
			$	$
Unit Price in Writing Dollars and Cents			Unit Price	Total Item Bid
5.3.4d	0	EA TREE REMOVAL (DIAMETER 24” AND OVER)		
			$	$
Unit Price in Writing Dollars and Cents			Unit Price	Total Item Bid
5.3.4e	0	EA STUMP REMOVAL		
			$	$
Unit Price in Writing Dollars and Cents			Unit Price	Total Item Bid
5.4.9a	0	C.Y. COMMON EXCAVATION		
			$	$
Unit Price in Writing Dollars and Cents			Unit Price	Total Item Bid
5.4.9b	0	C.Y. CLASS A ROCK EXCAVATION		
			$	$
Unit Price in Writing Dollars and Cents			Unit Price	Total Item Bid

Item No.	Qty.		Item Description		
5.4.9c	0	C.Y.	TOPSOIL EXCAVATED AND STOCKPILED		
Unit Price in Writing Dollars and Cents				$ Unit Price	$ Total Item Bid
5.4.9d	0	C.Y.	UNCLASSIFIED EXCAVATION		
Unit Price in Writing Dollars and Cents				$ Unit Price	$ Total Item Bid
5.4.9e	5	EA	TEST PITS AND AUGER BORINGS		
Unit Price in Writing Dollars and Cents				$ Unit Price	$ Total Item Bid
5.5.10a	0	C.Y.	CLASS B ROCK EXCAVATION		
Unit Price in Writing Dollars and Cents				$ Unit Price	$ Total Item Bid
5.5.10b	0	C.Y.	EXCAVATION WITHIN COFFERDAMS		
Unit Price in Writing Dollars and Cents				$ Unit Price	$ Total Item Bid
5.6.6a	0	C.Y.	ORDINARY BORROW		
Unit Price in Writing Dollars and Cents				$ Unit Price	$ Total Item Bid
5.6.6b	0	C.Y.	GRAVEL BORROW (TYPE B)		
Unit Price in Writing Dollars and Cents				$ Unit Price	$ Total Item Bid
5.6.6c	0	C.Y.	GRAVEL BORROW (TYPE C)		
Unit Price in Writing Dollars and Cents				$ Unit Price	$ Total Item Bid
5.6.6d	0	C.Y.	SAND BORROW		
Unit Price in Writing Dollars and Cents				$ Unit Price	$ Total Item Bid
5.6.6e	0	C.Y.	IMPERVIOUS SOIL BORROW		
Unit Price in Writing Dollars and Cents				$ Unit Price	$ Total Item Bid

Item No.	Qty.		Item Description		
5.6.6f	0	C.Y.	CONTROLLED DENSITY FILL(FLOWABLE FILL)		
Unit Price in Writing Dollars and Cents				$ Unit Price	$ Total Item Bid
5.6.6g	0	C.Y.	DENSE GRADED CRUSHED STONE		
Unit Price in Writing Dollars and Cents				$ Unit Price	$ Total Item Bid
5.7.3a	0	S.Y.	FINE GRADING AND COMPACTING- SUBGRADE AREAS		
Unit Price in Writing Dollars and Cents				$ Unit Price	$ Total Item Bid
5.8.5a	0	C.Y	PAVEMENT REPLACEMENT-GRAVEL SUB-BASE COURSE		
Unit Price in Writing Dollars and Cents				$ Unit Price	$ Total Item Bid
5.8.5b	0	C.Y	PAVEMENT REPLACEMENT-GRAVEL BASE COURSE		
Unit Price in Writing Dollars and Cents				$ Unit Price	$ Total Item Bid
5.8.5c	0	TON	PAVEMENT REPLACEMENT-BINDER COURSE		
Unit Price in Writing Dollars and Cents				$ Unit Price	$ Total Item Bid
5.8.5d	0	TON	PAVEMENT REPLACEMENT-TOP COURSE		
Unit Price in Writing Dollars and Cents				$ Unit Price	$ Total Item Bid
5.9.7a	0	C.Y.	TOPSOIL REHANDLED AND SPREAD		
Unit Price in Writing Dollars and Cents				$ Unit Price	$ Total Item Bid
5.9.7b	0	C.Y.	PLANTABLE SOIL BORROW		
Unit Price in Writing Dollars and Cents				$ Unit Price	$ Total Item Bid
5.9.7c	0	C.Y.	LOAM BORROW		
Unit Price in Writing Dollars and Cents				$ Unit Price	$ Total Item Bid

Item No.	Qty.		Item Description		
5.9.7d	0	C.Y.	COMPOST HANDLED AND SPREAD		
Unit Price in Writing Dollars and Cents				$ Unit Price	$ Total Item Bid
5.9.7e	0	S.Y.	SEEDING		
Unit Price in Writing Dollars and Cents				$ Unit Price	$ Total Item Bid
5.9.7f	0	S.Y.	FERTILIZER AND HERBICIDE APPLICATION		
Unit Price in Writing Dollars and Cents				$ Unit Price	$ Total Item Bid
5.9.7g	0	S.Y.	SODDING		
Unit Price in Writing Dollars and Cents				$ Unit Price	$ Total Item Bid
5.9.7h	0	S.Y.	HYDRO-SEEDING		
Unit Price in Writing Dollars and Cents				$ Unit Price	$ Total Item Bid
6.1.9a	0	L.F.	20" DIAMETER PIPE		
Unit Price in Writing Dollars and Cents				$ Unit Price	$ Total Item Bid
6.1.9b	2,900	L.F.	16" DIAMETER PIPE		
Unit Price in Writing Dollars and Cents				$ Unit Price	$ Total Item Bid
6.1.9c	20	L.F.	14" DIAMETER PIPE		
Unit Price in Writing Dollars and Cents				$ Unit Price	$ Total Item Bid
6.1.9d	80	L.F.	12" DIAMETER PIPE		
Unit Price in Writing Dollars and Cents				$ Unit Price	$ Total Item Bid
6.1.9e	220	L.F.	8" DIAMETER PIPE		
Unit Price in Writing Dollars and Cents				$ Unit Price	$ Total Item Bid

Item No.	Qty.		Item Description		
6.1.9f	120	L.F.	6" DIAMETER PIPE		
Unit Price in Writing Dollars and Cents				$ Unit Price	$ Total Item Bid
6.1.9g	0	L.F.	4" DIAMETER PIPE		
Unit Price in Writing Dollars and Cents				$ Unit Price	$ Total Item Bid
6.1.9h	50	L.F.	PIPE INSULATION ALL SIZES		
Unit Price in Writing Dollars and Cents				$ Unit Price	$ Total Item Bid
6.1.9i	0	E.A	CAPS MAIN, ALL SIZES		
Unit Price in Writing Dollars and Cents				$ Unit Price	$ Total Item Bid
6.2.4a	0	EA	8"X8" TAPPING SLEEVE WITH 8" GATE VALVE AND BOX		
Unit Price in Writing Dollars and Cents				$ Unit Price	$ Total Item Bid
6.2.4b	0	EA	12"X8" TAPPING SLEEVE WITH 8" GATE VALVE AND BOX		
Unit Price in Writing Dollars and Cents				$ Unit Price	$ Total Item Bid
6.3.5a	12	EA	16" VALVES AND BOXES		
Unit Price in Writing Dollars and Cents				$ Unit Price	$ Total Item Bid
6.3.5b	6	EA	12" VALVES AND BOXES		
Unit Price in Writing Dollars and Cents				$ Unit Price	$ Total Item Bid
6.3.5c	10	EA	8" VALVES AND BOXES		
Unit Price in Writing Dollars and Cents				$ Unit Price	$ Total Item Bid
6.3.5d	10	EA	6" VALVES AND BOXES		
Unit Price in Writing Dollars and Cents				$ Unit Price	$ Total Item Bid

Item No.	Qty.		Item Description
6.3.5e	0	EA	4" VALVES AND BOXES

Unit Price in Writing Dollars and Cents	$ Unit Price	$ Total Item Bid

6.3.5f	0	EA	REPLACE VALVE BOXES

Unit Price in Writing Dollars and Cents	$ Unit Price	$ Total Item Bid

6.3.5g	0	EA	ABANDON VALVE IN PLACE

Unit Price in Writing Dollars and Cents	$ Unit Price	$ Total Item Bid

6.3.5h	0	EA	8" INSERTION VALVE

Unit Price in Writing Dollars and Cents	$ Unit Price	$ Total Item Bid

6.4.4a	5	EA	NEW FIRE HYDRANT AND APPURTENANT WORK

Unit Price in Writing Dollars and Cents	$ Unit Price	$ Total Item Bid

6.5.3a	4	EA	REMOVE EXISTING HYDRANT AND APPURTENANT WORK

Unit Price in Writing Dollars and Cents	$ Unit Price	$ Total Item Bid

6.6.3a	0	EA	TRANSFER WATER SERVICE LATERAL

Unit Price in Writing Dollars and Cents	$ Unit Price	$ Total Item Bid

6.7.6a	45	EA	RENEW WATER SERVICE LATERAL MAIN TO PROPERTY LINE

Unit Price in Writing Dollars and Cents	$ Unit Price	$ Total Item Bid

6.7.6b	0	EA	RENEW WATER SERVICE LATERAL MAIN TO WATER METER

Unit Price in Writing Dollars and Cents	$ Unit Price	$ Total Item Bid

6.7.6c	0	EA	RENEW WATER SERVICE LATERAL SPECIAL

Unit Price in Writing Dollars and Cents	$ Unit Price	$ Total Item Bid

Item No.	Qty.		Item Description		
6.8.3a	1	L.S.	PRESSURE TESTS, LEAKAGE TESTS & CHLORINATION		
Unit Price in Writing Dollars and Cents				$ Unit Price	$ Total Item Bid
6.9.3a	1	L.S.	TEMPORARY WATER SERVICE-INCL. EXCAVATIONS & ALL INCIDENTAL WORK		
Unit Price in Writing Dollars and Cents				$ Unit Price	$ Total item Bid
6.10.1a	0	EA	RESTORATION OF LAWN SPRINKLER SYSTEM		
Unit Price in Writing Dollars and Cents				$ Unit Price	$ Total Item Bid
6.11.6a	1	L.S.	14 INCH WATER MAIN CLEANING AND LINING		
Writing				$ Unit Price	$ Total Item Bid
7.1.6a	0	L.F.	RCP PIPE - 12 INCH		
Unit Price in Writing Dollars and Cents				$ Unit Price	$ Total Item Bid
7.1.6b	0	L.F.	RCP PIPE - 15 INCH		
Unit Price in Writing Dollars and Cents				$ Unit Price	$ Total Item Bid
7.1.6c	0	L.F.	RCP PIPE - 18 INCH		
Unit Price in Writing Dollars and Cents				$ Unit Price	$ Total Item Bid
7.1.6d	0	L.F.	RCP PIPE - 21 INCH		
Unit Price in Writing Dollars and Cents				$ Unit Price	$ Total Item Bid
7.1.6e	0	L.F.	RCP PIPE - 24 INCH		
Unit Price in Writing Dollars and Cents				$ Unit Price	$ Total Item Bid
7.1.6f	0	L.F.	RCP PIPE - 42 INCH		
Unit Price in Writing Dollars and Cents				$ Unit Price	$ Total Item Bid

Item No.	Qty.		Item Description		
7.1.6g	0	EA	CONNECTION TO EXISTING STRUCTURES, CORING		
Unit Price in Writing Dollars and Cents				$ Unit Price	$ Total Item Bid
7.1.6h	0	EA	CONNECTION TO EXISTING STRUCTURES, OTHER		
Unit Price in Writing Dollars and Cents				$ Unit Price	$ Total Item Bid
7.2.6a	0	L.F.	PVC PIPE - 12 INCH		
Unit Price in Writing Dollars and Cents				$ Unit Price	$ Total Item Bid
7.2.6b	0	L.F.	PVC PIPE - 18 INCH		
Unit Price in Writing Dollars and Cents				$ Unit Price	$ Total Item Bid
7.2.6c	0	L.F.	PVC PIPE - 24 INCH		
Unit Price in Writing Dollars and Cents				$ Unit Price	$ Total Item Bid
7.2.6d	0	L.F.	8 INCH SUBDRAIN		
Unit Price in Writing Dollars and Cents				$ Unit Price	$ Total Item Bid
7.3.10a	0	EA	DRAINAGE MANHOLE – 6 ½ ft.		
Unit Price in Writing Dollars and Cents				$ Unit Price	$ Total Item Bid
7.3.10b	0	EA	DRAINAGE MANHOLE – 8 ½ ft.		
Unit Price in Writing Dollars and Cents				$ Unit Price	$ Total Item Bid
7.3.10c	0	EA	DRAINAGE CATCH BASIN – 10 ½ ft.		
Unit Price in Writing Dollars and Cents				$ Unit Price	$ Total Item Bid
7.3.10d	0	EA	SPECIAL DRAINAGE MANHOLE		
Unit Price in Writing Dollars and Cents				$ Unit Price	$ Total Item Bid

Item No.	Qty.		Item Description		
7.4.10a	0	EA	CATCH BASIN – 5 ½ ft.		
Unit Price in Writing Dollars and Cents				$ Unit Price	$ Total Item Bid
7.4.10b	0	EA	CATCH BASIN – 6 ½ ft.		
Unit Price in Writing Dollars and Cents				$ Unit Price	$ Total Item Bid
7.4.10c	0	EA	SPECIAL CATCH BASIN		
Unit Price in Writing Dollars and Cents				$ Unit Price	$ Total Item Bid
7.4.10d	0	EA	CURB INLET		
Unit Price in Writing Dollars and Cents				$ Unit Price	$ Total Item Bid
7.4.10e	0	EA	CURB INLET REMOVED & STACKED		
Unit Price in Writing Dollars and Cents				$ Unit Price	$ Total Item Bid
7.4.11a	0	EA	SLUICEWAY CATCH BASIN		
Unit Price in Writing Dollars and Cents				$ Unit Price	$ Total Item Bid
7.4.11b	0	EA	DOUBLE STRAIGHT GRANITE CURB INLET		
Unit Price in Writing Dollars and Cents				$ Unit Price	$ Total Item Bid
7.5.3a	0	EA	DRAINAGE STRUCTURE REMODELED		
Unit Price in Writing Dollars and Cents				$ Unit Price	$ Total Item Bid
7.5.3b	0	V.F.	DRAINAGE STRUCTURE REBUILT		
Unit Price in Writing Dollars and Cents				$ Unit Price	$ Total Item Bid
7.5.3c	0	EA	FRAME AND GRATE		
Unit Price in Writing Dollars and Cents				$ Unit Price	$ Total Item Bid

Item No.	Qty.		Item Description		
7.5.3d	0	EA	FRAME AND COVER		
Unit Price in Writing Dollars and Cents				$ Unit Price	$ Total Item Bid
7.5.3e	0	EA	FLARED-END SECTION WITH RIP-RAP		
Unit Price in Writing Dollars and Cents				$ Unit Price	$ Total Item Bid
7.5.3f	0	EA	DRAINAGE STRUCTURE CHANGE IN TYPE		
Unit Price in Writing Dollars and Cents				$ Unit Price	$ Total Item Bid
7.5.3g	0	EA	DRAINAGE STRUCTURE ABANDONED		
Unit Price in Writing Dollars and Cents				$ Unit Price	$ Total Item Bid
7.5.3h	0	EA	DRAINAGE STRUCTURE REMOVED		
Unit Price in Writing Dollars and Cents				$ Unit Price	$ Total Item Bid
7.5.3i	0	EA	FRAME & GRATE REMOVED & RESET		
Unit Price in Writing Dollars and Cents				$ Unit Price	$ Total Item Bid
7.5.3j	0	EA	FRAME & COVER REMOVED & RESET		
Unit Price in Writing Dollars and Cents				$ Unit Price	$ Total Item Bid
7.5.3k	0	EA	DOUBLE FRAME AND GRATE		
Unit Price in Writing Dollars and Cents				$ Unit Price	$ Total Item Bid
7.5.3l	0	EA	DRAINAGE VAULT REMOVED		
Unit Price in Writing Dollars and Cents				$ Unit Price	$ Total Item Bid
8.1.10a	0	L.F.	PVC SEWER PIPE - 8 INCH		
Unit Price in Writing Dollars and Cents				$ Unit Price	$ Total Item Bid

Item No.	Qty.		Item Description		
8.1.10b	0	L.F.	PVC SEWER PIPE - 12 INCH		
Unit Price in Writing Dollars and Cents				$ Unit Price	$ Total Item Bid
8.1.10c	0	C.Y.	CONCRETE CRADLE OR ENVELOPE		
Unit Price in Writing Dollars and Cents				$ Unit Price	$ Total Item Bid
8.1.10d	0	EA	CHIMNEY		
Unit Price in Writing Dollars and Cents				$ Unit Price	$ Total Item Bid
8.1.10e	0	EA	CONNECTION TO EXISTING SEWER STRUCTURES-CORING		
Unit Price in Writing Dollars and Cents				$ Unit Price	$ Total Item Bid
8.1.10f	0	L.S.	LEAKAGE TESTING		
Unit Price in Writing Dollars and Cents				$ Unit Price	$ Total Item Bid
8.2.12a	0	EA	SEWER MANHOLE - 6 FT.		
Unit Price in Writing Dollars and Cents				$ Unit Price	$ Total Item Bid
8.2.12b	0	EA	SEWER MANHOLE - 8 FT.		
Unit Price in Writing Dollars and Cents				$ Unit Price	$ Total Item Bid
8.2.12c	0	EA	SEWER MANHOLE - 10 FT.		
Unit Price in Writing Dollars and Cents				$ Unit Price	$ Total Item Bid
8.2.12d	0	EA	SEWER MANHOLE - 12 FT.		
Unit Price in Writing Dollars and Cents				$ Unit Price	$ Total Item Bid
8.2.12e	0	EA	SPECIAL SEWER MANHOLE		
Unit Price in Writing Dollars and Cents				$ Unit Price	$ Total Item Bid

Item No.	Qty.		Item Description		
8.2.12f	0	EA	FRAME AND COVER - SEWER		
Unit Price in Writing Dollars and Cents				$ Unit Price	$ Total Item Bid
8.2.12g	0	EA	DROP MANHOLE - SEWER		
Unit Price in Writing Dollars and Cents				$ Unit Price	$ Total Item Bid
8.2.12h	0	EA	SEWER STRUCTURE REMODELED		
Unit Price in Writing Dollars and Cents				$ Unit Price	$ Total Item Bid
8.2.12i	0	EA	SEWER STRUCTURE RELOCATED		
Unit Price in Writing Dollars and Cents				$ Unit Price	$ Total Item Bid
8.3.4.a	0	L.F.	SEWER SERVICE LATERAL		
Unit Price in Writing Dollars and Cents				$ Unit Price	$ Total Item Bid
8.3.4.b	0	EA	RENEW SEWER SERVICE LATERAL		
Unit Price in Writing Dollars and Cents				$ Unit Price	$ Total Item Bid
8.3.4.c	0	L.F.	SEWER SERVICE LATERAL INSULATION		
Unit Price in Writing Dollars and Cents				$ Unit Price	$ Total Item Bid
8.4.5a	0	L.S.	DEMOLITION OF EXISTIN PUMP STATION		
Unit Price in Writing Dollars and Cents				$ Unit Price	$ Total Item Bid
8.4.5b	0	L.F.	REMOVAL AND DISPOSAL OF EXISTING AC SEWER		
Unit Price in Writing Dollars and Cents				$ Unit Price	$ Total Item Bid
8.4.5c	0	EA	REMOVAL AND DISPOSAL OF EXISTING MANHOLES		
Unit Price in Writing Dollars and Cents				$ Unit Price	$ Total Item Bid

Item No.	Qty.		Item Description		
8.5.7a	0	L.F.	CLEAN & TV INSPECT SEWER MAIN BEFORE REHAB (All Sizes)		
Unit Price in Writing Dollars and Cents				$ Unit Price	$ Total Item Bid
8.5.7b	0	L.F.	CLEAN & TV INSPECT SEWER SERVICES BEFORE REHAB (All Sizes)		
Unit Price in Writing Dollars and Cents				$ Unit Price	$ Total Item Bid
8.5.7c	0	L.F.	CLEAN & TV INSPECT SEWER MAIN AFTER REHAB (All Sizes)		
Unit Price in Writing Dollars and Cents				$ Unit Price	$ Total Item Bid
8.5.7d	0	L.F.	CLEAN & TV INSPECT SEWER SERVICES AFTER REHAB (All Sizes)		
Unit Price in Writing Dollars and Cents				$ Unit Price	$ Total Item Bid
8.6.11a	0	L.F.	CHEMICAL ROOT TREATMENT SEWER		
Unit Price in Writing Dollars and Cents				$ Unit Price	$ Total Item Bid
8.7.15a	0	L.F.	SEWER MAIN TESTING AND SEALING		
Unit Price in Writing Dollars and Cents				$ Unit Price	$ Total Item Bid
8.7.15b	0	EA	SEALING OF WYES		
Unit Price in Writing Dollars and Cents				$ Unit Price	$ Total Item Bid
8.7.15c	0	EA	CUT SEWER GASKET		
Unit Price in Writing Dollars and Cents				$ Unit Price	$ Total Item Bid
8.7.15c	0	EA	CUT PROTUDING LATERAL		
Unit Price in Writing Dollars and Cents				$ Unit Price	$ Total Item Bid
8.8.7a	0	L.S.	SEWER FORCE MAIN BYPASS		
Unit Price in Writing Dollars and Cents				$ Unit Price	$ Total Item Bid

Item No.	Qty.		Item Description		
8.9.2a	0	C.Y.	DISPOSAL OF SPECIAL WASTES		
Unit Price in Writing Dollars and Cents				$ Unit Price	$ Total Item Bid
8.10.11a	0	V.F.	MANHOLE SEALING AND COATING		
Unit Price in Writing Dollars and Cents				$ Unit Price	$ Total Item Bid
9.1.19a	870	L.F.	SAWCUTTING CEM. & BIT. CONCRETE		
Unit Price in Writing Dollars and Cents				$ Unit Price	$ Total Item Bid
9.1.19b	500	GL	BITUMEN FOR TACK COAT		
Unit Price in Writing Dollars and Cents				$ Unit Price	$ Total Item Bid
9.1.19c	8	EA	CASTING ADJUSTMENT - LARGE		
Unit Price in Writing Dollars and Cents				$ Unit Price	$ Total Item Bid
9.1.19d	8	EA	CASTING ADJUSTMENT - SMALL		
Unit Price in Writing Dollars and Cents				$ Unit Price	$ Total Item Bid
9.1.19e	250	L.F.	WIRE LOOP DETECTOR		
Unit Price in Writing Dollars and Cents				$ Unit Price	$ Total Item Bid
9.1.19f	0	EA	RELOCATE/ADJUST HYDRANT		
Unit Price in Writing Dollars and Cents				$ Unit Price	$ Total Item Bid
9.1.19g	0	C.Y.	NEW STONE MASONRY WALL REMOVED & RESET		
Unit Price in Writing Dollars and Cents				$ Unit Price	$ Total Item Bid
9.1.19h	0	C.Y.	NEW STONE MASONRY RETAINING WALL		
Unit Price in Writing Dollars and Cents				$ Unit Price	$ Total Item Bid

Item No.	Qty.		Item Description		
9.1.19i	0	L.F.	FENCE REMOVED & RESET		
Unit Price in Writing Dollars and Cents				$ Unit Price	$ Total Item Bid
9.1.19j	0	EA	STONE BOUND REMOVED & STACKED		
Unit Price in Writing Dollars and Cents				$ Unit Price	$ Total Item Bid
9.2.3a	410	C.Y.	GRAVEL SUB-BASE COURSE		
Unit Price in Writing Dollars and Cents				$ Unit Price	$ Total Item Bid
9.3.3a	200	C.Y.	GRAVEL BASE COURSE		
Unit Price in Writing Dollars and Cents				$ Unit Price	$ Total Item Bid
9.4.3a	0	S.Y.	RECLAIMED BASE COURSE		
Unit Price in Writing Dollars and Cents				$ Unit Price	$ Total Item Bid
9.5.3a	470	TON	CLASS I BITUMINOUS CONCRETE BINDER COURSE – TYPE I-1		
Unit Price in Writing Dollars and Cents				$ Unit Price	$ Total Item Bid
9.6.3a	319	TON	CLASS I BITUMINOUS CONCRETE TOP COURSE – TYPE I-1		
Unit Price in Writing Dollars and Cents				$ Unit Price	$ Total Item Bid
9.7.3a	0	GL	CRACK SEALING		
Unit Price in Writing Dollars and Cents				$ Unit Price	$ Total Item Bid
9.7.3b	0	L.F.	CRACK SEALING		
Unit Price in Writing Dollars and Cents				$ Unit Price	$ Total Item Bid
9.8.3a	0	S.Y.	ASPHALT-LATEX, STONE AGGREGATE SAM		
Unit Price in Writing Dollars and Cents				$ Unit Price	$ Total Item Bid

Item No.	Qty.		Item Description		
9.8.3b	0	S.Y.	ASPHALT-LATEX, STONE AGGREGATE SAMI		
Unit Price in Writing Dollars and Cents				$ Unit Price	$ Total Item Bid
9.9.3	0	S.Y.	COLD PLANING (MILLING)		
Unit Price in Writing Dollars and Cents				$ Unit Price	$ Total Item Bid
9.10.3a	0	L.F.	VERTICAL GRANITE CURB – STRAIGHT SECTION		
Unit Price in Writing Dollars and Cents				$ Unit Price	$ Total Item Bid
9.10.3b	0	L.F.	VERTICAL GRANITE CURB – RADIUS SECTION		
Unit Price in Writing Dollars and Cents				$ Unit Price	$ Total Item Bid
9.10.3c	0	EA	VERTICAL GRANITE CURB 3 FT. RADIUS NOSE ROUNDING		
Unit Price in Writing Dollars and Cents				$ Unit Price	$ Total Item Bid
9.10.3d	0	L.F.	CURB REMOVED & STACKED		
Unit Price in Writing Dollars and Cents				$ Unit Price	$ Total Item Bid
9.11.3a	0	S.Y.	CONCRETE SIDEWALK		
Unit Price in Writing Dollars and Cents				$ Unit Price	$ Total Item Bid
9.11.3b	0	S.Y.	CONCRETE HANDICAP RAMP		
Unit Price in Writing Dollars and Cents				$ Unit Price	$ Total Item Bid
9.11.3c	0	S.Y.	CONCRETE DRIVEWAY APRON		
Unit Price in Writing Dollars and Cents				$ Unit Price	$ Total Item Bid
9.11.3d	20	TON	BITUMINOUS CONCRETE WALK SURFACE		
Unit Price in Writing Dollars and Cents				$ Unit Price	$ Total Item Bid

Item No.	Qty.		Item Description		
9.11.3e	0	TON	BITUMINOUS CONCRETE HANDICAP RAMP		
Unit Price in Writing Dollars and Cents				$ Unit Price	$ Total Item Bid
9.11.3f	0	TON	BITUMINOUS CONCRETE DRIVEWAY APRON		
Unit Price in Writing Dollars and Cents				$ Unit Price	$ Total Item Bid
9.12.3a	0	S.Y.	RECONSTRUCT EXISTING DRIVEWAYS		
Unit Price in Writing Dollars and Cents				$ Unit Price	$ Total Item Bid
9.12.3b	0	S.Y.	RECONSTRUCT CEMENT CONCRETE WALKWAY		
Unit Price in Writing Dollars and Cents				$ Unit Price	$ Total Item Bid
9.12.3c	0	S.Y.	RECONSTRUCT FLAGSTONE WALKWAY		
Unit Price in Writing Dollars and Cents				$ Unit Price	$ Total Item Bid
9.12.3d	0	S.Y.	RECONSTRUCT BITUMINOUS CONCRETE WALKWAY		
Unit Price in Writing Dollars and Cents				$ Unit Price	$ Total Item Bid
9.12.3e	0	S.Y.	RECONSTRUCT BRICK WALKWAY		
Unit Price in Writing Dollars and Cents				$ Unit Price	$ Total Item Bid
9.13.3a	0	L.F.	GUARD RAILS - STEEL		
Unit Price in Writing Dollars and Cents				$ Unit Price	$ Total Item Bid
9.13.3b	0	L.F.	GUARD RAILS - TIMBER		
Unit Price in Writing Dollars and Cents				$ Unit Price	$ Total Item Bid
9.13.3c	0	L.F.	GUARD RAILS REMOVED AND RESET		
Unit Price in Writing Dollars and Cents				$ Unit Price	$ Total Item Bid

Item No.	Qty.		Item Description		
9.14.3a	0	L.F.	REFLECTORIZED PAINTED LINE, ___INCH WIDTH		
Unit Price in Writing Dollars and Cents				$ Unit Price	$ Total Item Bid
9.14.3b	0	L.F.	REFLECTORIZED THERMOPLASTIC LINE, 4 INCH WIDTH		
Unit Price in Writing Dollars and Cents				$ Unit Price	$ Total Item Bid
9.14.3c	0	L.F.	REFLECTORIZED THERMOPLASTIC LINE, 12 INCH WIDTH		
Unit Price in Writing Dollars and Cents				$ Unit Price	$ Total Item Bid
9.14.3d	0	L.F.	REFLECTORIZED THERMOPLASTIC LINE, 24 INCH WIDTH		
Unit Price in Writing Dollars and Cents				$ Unit Price	$ Total Item Bid
9.14.3e	0	S.F.	PAVEMENT ARROW AND LEGEND, PAINTED		
Unit Price in Writing Dollars and Cents				$ Unit Price	$ Total Item Bid
9.14.3f	0	S.F.	PAVEMENT ARROW AND LEGEND, THERMOPLASTIC		
Unit Price in Writing Dollars and Cents				$ Unit Price	$ Total Item Bid
9.15.3a	0	EA	RELOCATE STREET SIGN		
Unit Price in Writing Dollars and Cents				$ Unit Price	$ Total Item Bid
9.15.3b	0	S.F.	NEW STREET SIGN		
Unit Price in Writing Dollars and Cents				$ Unit Price	$ Total Item Bid
9.15.3c	0	EA	NEW POST		
Unit Price in Writing Dollars and Cents				$ Unit Price	$ Total Item Bid
9.15.3d	0	EA	REMOVE & STACK SIGN		
Unit Price in Writing Dollars and Cents				$ Unit Price	$ Total Item Bid

Item No.	Qty.		Item Description		
9.15.3e	0	EA	REMOVE & RELOCATE PARKING METER		
Unit Price in Writing Dollars and Cents				$ Unit Price	$ Total Item Bid
9.16.3	0	S.F.	INFRA-RED APPLICATION		
Unit Price in Writing Dollars and Cents				$ Unit Price	$ Total Item Bid
9.17.3a	0	S.F.	POTHOLE REPAIR		
Unit Price in Writing Dollars and Cents				$ Unit Price	$ Total Item Bid
9.18.1a	0	EA	PORTABLE CHANGEABLE MESSAGE SIGN		
Unit Price in Writing Dollars and Cents				$ Unit Price	$ Total Item Bid
9.19.3a	210	TON	Class I Temporary Pavement Course, Type 1-1		
Unit Price in Writing Dollars and Cents				$ Unit Price	$ Total Item Bid
9.20.2a	0	L.S.	PEDESTRIAN AND VEHICLE MANAGEMENT PER MUTCD		
Unit Price in Writing Dollars and Cents				$ Unit Price	$ Total Item Bid
9.21.2a	0	L.S.	TEMPORARY CONSTRUCTION AND TRAFFIC CONTROL SIGNS		
Unit Price in Writing Dollars and Cents				$ Unit Price	$ Total Item Bid
9.22	940	L.F.	RECONSTRUCTION OF BITUMINOUS CONCRETE CURB		
Writing				$ Unit Price	$ Total Item Bid
10.13a	0	EA	TREE PROTECTION		
Unit Price in Writing Dollars and Cents				$ Unit Price	$ Total Item Bid
10.13b	0	EA	TREE MAINTENANCE		
Unit Price in Writing Dollars and Cents				$ Unit Price	$ Total Item Bid

Item No.	Qty.		Item Description		
10.13c	0	EA	TREE PRUNING (DIAMETER BETWEEN 3" AND 6")		
Unit Price in Writing Dollars and Cents				$ Unit Price	$ Total Item Bid
10.13d	0	EA	TREE PRUNING (DIAMETER BETWEEN 6" AND 12")		
Unit Price in Writing Dollars and Cents				$ Unit Price	$ Total Item Bid
10.13e	0	EA	TREE PRUNING (DIAMETER BETWEEN 12" AND 18")		
Unit Price in Writing Dollars and Cents				$ Unit Price	$ Total Item Bid
10.13f	0	EA	TREE PRUNING (DIAMETER BETWEEN 18" AND 24")		
Unit Price in Writing Dollars and Cents				$ Unit Price	$ Total Item Bid
10.13g	0	EA	TREE PRUNING (DIAMETER BETWEEN 24" AND 30")		
Unit Price in Writing Dollars and Cents				$ Unit Price	$ Total Item Bid
10.13h	0	EA	TREE PRUNING (DIAMETER GREATER THAN 30")		
Unit Price in Writing Dollars and Cents				$ Unit Price	$ Total Item Bid
10.13i	0	S.Y.	FERTILIZING TREES		
Unit Price in Writing Dollars and Cents				$ Unit Price	$ Total Item Bid
10.13j	0	S.Y.	MYCORRHIZAL INOCULATION OF TREES		
Unit Price in Writing Dollars and Cents				$ Unit Price	$ Total Item Bid
11.5.5	0	C.Y.	PLANTING MULCH		
Unit Price in Writing Dollars and Cents				$ Unit Price	$ Total Item Bid
11.5.11a	0	C.Y.	TREE INSTALLED COMPLETE IN PLACE		
Unit Price in Writing Dollars and Cents				$ Unit Price	$ Total Item Bid

Item No.	Qty.		Item Description		
11.5.11b	0	C.Y.	SHRUB INSTALLED COMPLETE IN PLACE		
Unit Price in Writing Dollars and Cents				$ Unit Price	$ Total Item Bid
11.5.11c	0	C.Y.	TREE REMOVED AND REPLANTED		
Unit Price in Writing Dollars and Cents				$ Unit Price	$ Total Item Bid
11.5.11d	0	EA	SHRUB REMOVED AND REPLANTED		
Unit Price in Writing Dollars and Cents				$ Unit Price	$ Total Item Bid
11.6.10a	0	C.Y.	ON-SITE LOAM REHANDLED, SPREAD AND COMPACTED		
Unit Price in Writing Dollars and Cents				$ Unit Price	$ Total Item Bid
11.6.10b	0	C.Y.	COMPOST HANDLED, SPREAD AND COMPACTED		
Unit Price in Writing Dollars and Cents				$ Unit Price	$ Total Item Bid
11.6.10c	0	C.Y.	LOAM SPREAD AND COMPACTED		
Unit Price in Writing Dollars and Cents				$ Unit Price	$ Total Item Bid
11.6.10d	0	S.Y.	SEEDING		
Unit Price in Writing Dollars and Cents				$ Unit Price	$ Total Item Bid
12.2.20a	0	L.S.	TRAFFIC CONTROL SIGNAL REMOVED & STACKED		
Unit Price in Writing Dollars and Cents				$ Unit Price	$ Total Item Bid
12.2.20b	0	L.S.	TRAFFIC SIGNALTYPE 8DW with 2 Spair BIU's		
Unit Price in Writing Dollars and Cents				$ Unit Price	$ Total Item Bid
12.2.20c	0	EA	PULL BOX 12 IN X 12 IN (SD2.031)		
Unit Price in Writing Dollars and Cents				$ Unit Price	$ Total Item Bid
12.2.20d	0	L.F.	3" ELECTRICAL CONDUIT (TYPE NM)		
Unit Price in Writing Dollars and Cents				$ Unit Price	$ Total Item Bid
12.2.20e	0	L.F.	2" ELECTRICAL CONDUIT (TYPE NM)		
Unit Price in Writing Dollars and Cents				$ Unit Price	$ Total Item Bid

Item No.	Qty.		Item Description
13.1.1a	0	EA	PEDESTRIAN LIGHT POLE

Unit Price in Writing Dollars and Cents	$ Unit Price	$ Total Item Bid

13.1.2a	0	EA	PEDESTRIAN LIGHTING LUMINAIRE

Unit Price in Writing Dollars and Cents	$ Unit Price	$ Total Item Bid

13.1.2b	0	EA	LIGHTED BOLLARDS

Unit Price in Writing Dollars and Cents	$ Unit Price	$ Total Item Bid

13.1.3a	0	EA	LIGHT POLE REMOVED AND RESET

Unit Price in Writing Dollars and Cents	$ Unit Price	$ Total Item Bid

13.2.1a	0	EA	PEDESTRIAN LIGHT STANDARD FOUNDATION

Unit Price in Writing Dollars and Cents	$ Unit Price	

13.4.1a	0	EA	PULL BOX 12" X 12" - SD2.031

Unit Price in Writing Dollars and Cents	$ Unit Price	$ Total Item Bid

13.5.1a	0	L.S.	WIRING, GROUNDING AND SERVICE CONNECTION

Unit Price in Writing Dollars and Cents	$ Unit Price	$ Total Item Bid

TOTAL AMOUNT OF BID BASED ON ENGINEER'S ESTIMATE OF QUANTITIES:

Total Amount in Writing Dollars and Cents	$ Dollars
Company Name	Address
Signature	Date
Title	
License No. (if Applicable)	

SECTION 3 CONTRACT AGREEMENT

Project Name: **16-Inch Water Main Replacement**

Contract No.: **14DPW038C**

NOTE: The subheadings on this and the following pages are intended for convenience of reference only, and do not form part of the Contract or specifications.

THIS AGREEMENT, made and entered into by and between the Town of Needham, Massachusetts, the Owner, acting through its Town Manager, who act herein solely for said Town and without personal liability to themselves, and _____, having a usual place of business at _____, in the town of _____ in the state of _____, the Contractor.

WITNESSETH, that the parties to these presents, each in consideration of the undertakings, promises and agreements on the part of the other herein contained, have undertaken, promised and agreed, and do hereby undertake, promise and agree, the Owner for itself, its successors and assigns, and the party of the Contractor for himself and his heirs, executors and administrators or successors and assigns as follows:

3.1 CONTRACT ARTICLES

Art. I Definitions

Wherever the words defined in this article, or pronouns used in their stead, occur in this Contract and the attached specifications, they shall have the meanings herein given.

Owner

The word "Owner" shall mean the Town of Needham.

Contractor

The word "Contractor" shall mean the party, above designated, entering into this Contract for the performance of the work required.

Engineer

The word "Engineer" shall mean the Town Engineer of Needham, or in his absence, shall mean the Assistant Town Engineer.

Inspector

The word "Inspector shall mean that person designated by the Engineer to observe record and report to the Engineer the activities of the Contractor. The Inspector shall record observations in a field notebook. Inspector shall also be equipped with a two-way radio to relay information or questions to the Engineer and Contract Administrator. The Inspector shall have no authority to direct the Contractor or to approve or accept work or materials.

Project Supervisor

The term "Project Supervisor" shall mean that person designated by the Contractor and approved, in writing, by the Engineer to be the Contractor's representative to oversee all work performed in the field. The Project Supervisor shall be responsible for the faithful execution of the Contract per these specifications and the Contract Plans.

Unit Price Contract

The term "Unit Price Contract" shall mean a form of Contract characterized by individual units of work, which together form a complete project. Estimated quantities for each unit item of work are predetermined and cannot be increased or decreased except as provided elsewhere under this Contract. The value of the Contract is defined by the sum of the discrete item values.

Contract Administrator

The term "Contract Administrator" shall mean the person designated by the Engineer to prepare and process administrative documents associated with the project for review and approval of the Engineer.

Art. IIa. Project Supervision

The Contractor shall provide a qualified Project Supervisor to oversee all work in the field. This person shall be an employee of the General Contractor. The Contractor shall submit for review and written approval by the Engineer, the qualifications, projects history and references of the proposed Project Supervisor, prior to beginning work. The Project Supervisor shall be on the project site at all times while any work is being performed and shall be responsible for the coordination, quality, timeliness and performance of the work of the Contractor and the sub-contractor(s). Should the Project Supervisor need to be absent from the work at any time, the Contractor shall provide a pre-approved alternate to assume his duties. The alternate must be approved (in a manner similar to the Project Supervisor) by the Engineer prior to his assumption of duties.

Art. IIb. Obligations and Liability of Contractor

The Contractor shall do all the work and furnish all the materials, tools and appliances, except as herein otherwise specified and everything necessary for proper performance and completion of the work required by this Contract, in the manner and within the time herein specified. He shall complete the entire work to the satisfaction of the Engineer, and in accordance with the specifications and drawings herein mentioned, at the prices herein agreed upon and fixed therefore. All the work, labor and materials to be done and furnished under this Contract shall be done and furnished strictly pursuant to, and in conformance with, the attached specifications, and the directions of the Engineer as given from time to time during the progress of the work, under the terms of this Contract, and also in accordance with the Contract Drawings.

The Contractor shall coordinate his operations and avoid any interference with the operations of any other contractors who may be employed on other work of the Owner and shall cooperate in the arrangements for storage of materials. The Contractor shall maintain all utilities and shall be responsible for the coordination of all required utility relocations unless stated otherwise in the Contract Documents.

The Contractor shall conduct his work so as to interfere as little as possible with private business and public travel. He shall, at his own expense, wherever necessary or required, maintain fences, provide watchmen, maintain lights, and take such other precautions as may be necessary to protect life and property and shall be liable for all damages occasioned in any way by his act or neglect, or that of his agents, employees or workmen.

The Contractor shall take all responsibility for the work done under this Contract; for the protection of the work; and for preventing injuries to persons and damage to property and utilities on or about the work. He shall in no way be relieved of his responsibility by any right of the Engineer to give permission or issue orders relating to any part of the work, nor by any such permission given or orders issued, nor by failure of the Engineer to give such permission or issue such orders. The Contractor shall bear all losses resulting to him or to the Owner on account of the amount or character of the work, or because the nature of the site in or on which the work is done is different from what was estimated or expected, or on account of the weather, elements or other whatsoever character against the Contractor or the Owner, and indemnify, save harmless and insure the Owner, its officers or agents, against all claims arising out of injury or damage to persons, corporations or property, whether said claims arise out of negligence or not, or whether said claims are for unavoidable damage or not, and from all claims relating to labor and materials furnished for the work. The Contractor shall not be required to indemnify the Owner against damage or claims occasioned by acts of the Owner.

Art. III Engineer to Decide

The Engineer shall in all cases determine the amount, quality, acceptability and fitness of the several kinds of work and materials which are to be paid for under this Contract; shall

determine all questions in relation to said work and the construction thereof, and shall in all cases decide every question of fact which may arise relative to the fulfillment of this Contract on the part of the Owner and on the part of the Contractor. His estimate and decision shall be final and conclusive upon both parties to this Contract.

Any differences or conflicts, which may arise between the Contractor and other contractors of the Owner in regard to their work, shall be adjusted and determined by the Engineer.

Art. IV Engineer to Give Orders

The Engineer shall make all necessary explanations as to the meaning and intention of the drawings and specifications, and shall give all necessary orders and directions.

The order or sequence of execution of the work and the general conduct of the work shall be subject to the approval of the Engineer, who shall have authority to direct the order or sequence where public necessity or welfare shall require. However, such approval or direction shall in no way affect the responsibility of the Contractor in the conduct of the work except for extension of time as necessary and approved.

Art. V Absence of Contractor

Whenever the Contractor is not present on any part of the work where it may be desired to give directions, orders may be given by the Engineer, and shall be received and obeyed by the superintendent or foreman who may have charge of the particular work in reference to which orders are given.

Art. VI Parts of Contract

The Information for Bidders, any Addenda, the Proposal submitted by the Contractor, the Specifications and the Contract Drawings are made parts of this Contract.

Art. VII Discrepancies, Errors and Omissions

The drawings and specifications are intended to be explanatory of each other. Should any discrepancy appear or any misunderstanding arise as to the import of anything contained in either, the interpretation and decision of the Engineer shall be final and binding on both parties to this Contract.

Any correction of errors or omissions in drawings and specifications may be made by the Engineer when such correction is necessary for the proper fulfillment of their intention as interpreted by him. Where said correction of errors or omissions, except as provided in the next two paragraphs below, adds to the amount of work to be done by the Contractor, compensation for said additional work shall be made under the item for Extra Work

except where the additional work may be classed under some item of work for which a unit price is included in the proposal.

The fact that specific mention of a fixture, or of any part of the work, is omitted in the specifications, whether intentionally or otherwise, when the same is clearly shown or indicated on the drawings, or is usually and customarily required to fully complete such work as is specified herein, will not entitle the Contractor to consideration in the matter of any claim for extra compensation, but the said fixtures or work, or both, must be installed or done the same as if called for by both the drawings and specifications.

All work indicated on the drawings and not mentioned in the specifications, or vice-versa, and all work and material usual and necessary to make the work complete in all its parts, whether or not they are indicated on the drawings or mentioned in the specifications, shall be furnished and executed the same as if they were called for by both the drawings and specifications.

Art. VIII Insurance

The Contractor shall carry and maintain insurance as specified below. This insurance shall be in such form as shall protect him and any Subcontractor performing work covered by this Contract and/or the Owner, if provided for herein, from all claims and liability for damages for bodily injury including accidental death and for property damage, which may arise from operations under this Contract, whether such operations are performed by the Contractor himself, by any Subcontractor, or by anyone directly or indirectly employed by either of them. This insurance shall remain in effect until the work has been accepted by the Owner.

Except as otherwise stated, the amounts of such insurance shall be, for each policy, not less than:

(A) For liability for bodily injury, including accidental death, $l,000,000. per occurrence, subject to the same limit for each person, $3,000,000. general aggregate.

(B) For liability for property damage, $1,000,000. per occurrence and $l,000,000. general aggregate.

The following types of insurance shall be provided:

(a) Workmen's Compensation Insurance as required by the General Laws of Massachusetts.

(b) Public Liability Insurance and Contractor's Protective Public Liability Insurance, in the amounts required in (A) above.

(c) Property Damage Insurance and Contractor's Protective Property Damage Insurance, including coverage for damage to or destruction of wires or pipes and similar property and appurtenant apparatus, and collapse of or structural damage to any building or structure except those on which work under this Contract is being done, in the amounts required in (B) above. Blasting and explosion coverage shall be obtained, if there is a need for blasting under this Contract, and no blasting shall be done until such insurance has been obtained.

(d) Bodily Injury Insurance covering the operation of all motor vehicles owned by the Contractor, in the amounts required in (A) above.

(e) Property Damage Insurance covering the operation of all motor vehicles owned by the Contractor, in an amount not less $100,000.00.

(f) Insurance in the amounts required in (A) and (E) above, to cover bodily injuries and property damage resulting from the use of motor vehicles not owned by the Contractor, while such vehicles are being operated in connection with the prosecution of the work under this Contract.

(g) Contractual Liability Insurance covering the liability assumed by the Contractor under the fourth paragraph of Art. II, in the above amounts required under (A) and (B) above.

(h) In all coverages set forth in this Section, there shall be no deductible clause.

All policies shall be so written that the Owner will be notified of cancellation or restrictive amendment at least l5 days prior to the effective date of such cancellation or amendment. Certificates in triplicate from the insurance carrier stating the limits of liability and expiration date shall be filed with the Owner before operations are begun. Such certificates shall not merely name the types of policy provided, but shall specifically refer to this Contract and Article, and the above paragraph in accordance with which insurance is being furnished, and state that such insurance is as required by such paragraphs of this Contract.

The "Contractor" agrees to indemnify and save the "Owner" harmless from and against any and all costs, less expense, liability, damages or claims for damages, including costs of defending any action on account of any injury or damage to improvements or property of the "Owner" or any person, firm corporation, or association and on account of any injury (including death) to any person or persons arising or resulting from the work provided for or performed under the Contract documents or from any act, omission, or negligence of the "Contractor", subcontractors and his and their agents or employees. The foregoing provisions shall not be deemed to be released, waived nor modified in any respect by reason of any surety or insurance provided by the "Contractor" under the contract, which term shall include all the contract documents.

Attention of bidders is called to the requirements of the Massachusetts General Laws, Chapter l49, section 34A, relating to proof of compliance regarding certain insurance before a Contract may be awarded. See Art. X.

Art. IX Patents

The Contractor shall indemnify and save harmless the Owner, and all persons acting for or on behalf of the Owner, from all claims and liability of any nature or kind, including costs and expenses, arising from or occasioned by any infringement or alleged infringement of patent rights on any inventions, process, article, or apparatus, or any part thereof, furnished and installed by said Contractor or arising from or occasioned by the use or manufacture thereof, including their use by the Owner.

Art. X. Compliance With Laws

The Contractor shall keep himself fully informed of all existing and future State and National laws and municipal ordinances and regulations, which affect, in any manner, those engaged or employed in the work, or the materials used in the work, or in any way affect the conduct of the work, and of all such orders and decrees of bodies or tribunals having any jurisdiction or authority over the same. If any discrepancy or inconsistency is discovered in the plans, drawings, specifications or Contract for this work in relation to any such law, ordinance, regulations, order, or decree, he shall forthwith report the same to the Engineer in writing.

He shall at all times himself observe and comply with, and cause all his agents and employees to observe and comply with, all such existing and future laws, ordinances, regulations, orders and decrees; and shall protect and indemnify the Owner, its officers and agents against any claim or liability arising from or based upon violation of any such law, ordinance, regulation, order or decree, whether by himself or his employees.

Particular attention is called to certain stipulations of Chapter l49 of the General Laws of Massachusetts, Tercentenary Edition, and Amendments thereto including the Acts of l947, as follows:

> Section 25. "Every employee in public work shall lodge, board and trade where and with whom he elects, and no person or his agents or employees under Contract with the Commonwealth, a County, City or Town, or with a department, board, commission or officer acting therefor, for the doing of public work shall directly or indirectly require, as a condition of employment therein, that the employee shall lodge, board or trade at a particular place or with a particular person. This section shall be made a part of the Contract for such employment.

Section 26. "In the employment of mechanics, teamsters, chauffeurs and laborers in the construction of public works by the Commonwealth, or by a County, Town or District, or by persons contracting or subcontracting for such works, preference shall first be given to citizens of the Commonwealth who have served in the Armed Services of the United States in time of war and have been honorably discharged therefore or released from active duty therein, and who are qualified to perform the work to which the employment relates; and secondly, to citizens of the Commonwealth generally, and, if they cannot be obtained in sufficient numbers, then to citizens of the United States and every Contract for such work shall contain a provision to this effect.____"

____Payments by employers to health and welfare and pension plans under collective bargaining agreements or understandings between organized labor and employers shall be included for the purpose of establishing minimum wage rates herein provided.____"

Section 27. "___Said schedule shall be made a part of the contract for said works and shall continue to be the minimum rate or rates of wages for said employees during the life of the contract.___" (see Section 3.5 for minimum wage rates listed in the document entitled "The Commonwealth of Massachusetts Department of Labor, Division of Occupational Safety, Prevailing Wage Rates".

"___The aforesaid rates of wages in the schedule of wage rates shall include payments by employers to health and welfare and pension plans as provided in the previous section, and such payments shall be considered as payments to persons under this section performing work as herein provided. Any employer engaged in the construction of such works who does not make payments to a health and welfare and to a pension plan where such payments are included in said rates or wages, shall pay the amount of said payments directly to each employee engaged in said construction.____"

Section 34. "Every contract, except for the purchase of material or supplies, involving the employment of laborers, workmen, mechanics, foremen or inspectors, to which the Commonwealth or any County or any Town, subject to Section Thirty, is a party, shall contain a stipulation that no laborer, workman, mechanic, foreman or inspector working within the Commonwealth, in doing or contracting to do the whole or part of the work contemplated by the contract, shall be required or permitted to work more than eight hours in any one day or more than forty-eight hours in any one week, or more than six days in any one week, except in cases of emergency or, in cases of emergency or, in case any town subject to Section Thirty-one is a party to such a contract, more than eight hours in any one day, except as aforesaid.___"

Section 34A. "Every contract for the construction, alteration, maintenance, repair or demolition of, or addition to, any public building or other public works for the Commonwealth or any political subdivision thereof shall contain stipulations requiring that the contractor shall, before commencing performance of such contract provide by insurance for the payment of compensation and the furnishing of other benefits under Chapter l52, to all persons to be employed under the contract, and that the contractor shall continue such insurance in full force and effect during the term of the contract. No officer or agent contracting in behalf of the Commonwealth or any political subdivision thereof shall award such a contract until he has been furnished with sufficient proof of compliance with the aforesaid stipulations. Failure to provide and continue in force such insurance as aforesaid shall be deemed a material breach of the contract and shall operate as an immediate termination thereof. No cancellation of such insurance, whether by the insurer or by the insured, shall be valid unless written notice thereof is given by the party proposing cancellation to the other party and to the officer or agent who awarded the contract at least fifteen days prior to the intended effective date thereof, which date shall be expressed in said notice. Notice of cancellation sent by the party proposing cancellation by registered mail, postage prepaid with a return receipt of the addressee requested, shall be a sufficient notice.___"

Section 34B. "Every contract for the construction, alteration, maintenance, repair or demolition of, or addition to, any public works for the Commonwealth or any political subdivision thereof shall contain stipulations requiring that the contractor shall pay to any reserve police officer employed by him in any city or town the prevailing rate of wage paid to regular police officers in such city or town."

The Statement of Compliancy included herewith for completion and forwarding to the Commissioner of Labor and Industries by the Contractor as required by Chapter l49, Section 27B which states: "Each such contractor, subcontractor or public body shall furnish to the Commissioner of Labor and Industries within fifteen days after completion of its portion of the work a statement (of compliance in the form provided), executed by the contractor, subcontractor or public body or by any authorized officer or employer of the contractor, subcontractor or public body who supervises, the payment of wages." In addition, every contractor and subcontractor is required to submit a copy of their weekly payroll records to the awarding authority. This is required to be done on a weekly basis.

The Contractor shall cause to be maintained complete, accurate, and detailed records of all time devoted to the project by the Contractor and each consultant or subcontractor employed by the Contractor. The Owner may at all reasonable times audit such records. As a contract awarded pursuant to Section 39M of M.G.L. Chapter 30, the Contractor shall comply with General Laws Chapter 30, Section 39R, which requires the Contractor to:

i) maintain accurate and detailed accounts for a six-year period after the final payment [(b)(1)].

ii) file regular statements of management concerning internal auditing controls [(c)].

iii) file an annual audited financial statement [(d)]

iv) submit a statement from an independent certified public accountant that such CPS has examined management's internal auditing controls and expresses an opinion as to their consistency with management's statement in (b) above and whether such statements are reasonable with respect to transactions and assets that are substantial in relation to the Contractor's financial statement [(c)(4)(1)-(2)].

Art. XI (Reserved)

Art. XII Provision Required By Law Deemed Inserted

Each and every provision of law and clause required by law to be inserted in this Contract shall be deemed to be inserted herein and the Contract shall be read and enforced as though it were included herein and if through mistake or otherwise any such provision is not inserted, or is not correctly inserted, then upon the application of either party, the Contract shall forthwith be physically amended to make such insertion.

Art. XIII Permits

The Contractor shall, at his own expense, take out all necessary permits from the county, municipal or other public authorities; shall give all notices required by law or ordinance and shall post all bonds and pay all fees and charges incident to the due and lawful prosecution of the work covered by this Contract.

Art. XIV Not To Sublet Or Assign

The Contractor shall keep the work under his personal control and shall not assign by power of attorney or otherwise, or sublet the work or any part thereof, without the previous written consent of the Owner. Should the Contractor require the services of one or more sub-contractors, the Contractor shall submit to the Owner, at the time of

submittal of bids, the name and references for the sub-contractor(s) for review and approval by the Owner. Said sub-contractor(s) shall not begin any work or bring any equipment, etc., onto the site until such approval is given. Under no circumstances shall the Contractor sub-contract more than forty percent of the work on the project. The Contractor shall be responsible for the operations of any sub-contractor(s) and the sub-contractor shall be subject to the directions of the Contractor's Project Supervisor.

The Contractor shall neither legally nor equitably assign-any of the moneys payable under this agreement, or his claim thereto, unless by and with the consent of both the Owner and the Surety on the Bond, and shall give his constant and personal attention to the faithful prosecution of the work.

Art. XV Time Of Beginning Work

The Contractor shall commence work, at such points as the Engineer may approve, within *45* days after the date of the Notice to Proceed by the Engineer, or, if no such notice is issued, within 60 days after the execution of this Contract by the Owner.

The time of starting may be postponed by written agreement between the Owner and the Contractor because of expected delays in receipt of materials and equipment, or if the season is unsuitable for commencement of the work, or because of other contingencies clearly beyond the control or responsibility of the Contractor.

Art. XVI Delay By Owner

The Owner may delay the beginning of all or any part of the work if the necessary lands or rights-of-way for such work have not been obtained or if materials or equipment to be furnished by the Owner are not delivered. The Contractor shall have no claim for damages on account of such delay, but shall be entitled to as much additional time in which to perform and complete this Contract on his part as the Engineer shall certify in writing to be equitable.

Art. XVII Time Of Completion

The rate of progress shall be such that the whole work shall be performed in accordance with the terms of this Contract within the number of calendar days after the date of execution of the Contract as stipulated in the Proposal, unless and except as any part may be delayed under the provisions of this Contract.

It is agreed that the rate of progress herein required has been conservatively adjusted to allow for ordinary delays incidental to construction work of this character. No extension of time will be allowed for ordinary delays, inclement weather and accidents, and the occurrence of such will not relieve the Contractor from the necessity of maintaining this rate of progress.

If delays are caused by acts of God, acts of Government or State, strikes, extra work, floods or other contingencies clearly beyond the control or responsibility of the Contractor, the Contractor shall be entitled to as much additional time to perform and complete this Contract on his part as the Engineer shall certify in writing to be equitable.

The time in which this Contract is to be performed and the work is to be completed is of the essence of this Agreement.

Art. XVIII (Reserved)

Art. XIX Night And Sunday Work

No night work requiring the presence of an engineer or inspector will be permitted, except in case of emergency, and then only to such extent as is absolutely necessary, and with written permission of the Engineer, provided that this clause shall not operate in case of a gang organized for regular and continuous night work, and/or on work which, in the opinion of the Engineer, can only be satisfactorily performed at night.

No Sunday work will be permitted, except in case of emergency, and then only with written consent of the Engineer, and to such extent as he may judge to be necessary.

Art. XX Employ Competent Men

The Contractor shall employ only competent men to do the work. Whenever the Engineer shall notify the Contractor in writing that any man of the work is, in his opinion, incompetent, unfaithful, disorderly, or otherwise unsatisfactory, or not employed in accordance with the provisions of this Contract, such man shall be discharged from the work and shall not again be employed on the work, except with the consent of the Engineer.

Art. XXI Employ Sufficient Labor And Equipment

If, in the opinion of the Engineer, the Contractor is not employing sufficient labor or equipment to complete this Contract within the time specified, the Engineer may, after giving written notice, require the Contractor to employ such additional labor and equipment as may be necessary to enable the work to progress properly.

Art. XXII Intoxicating Liquors And Controlled Substances

The Contractor shall not sell, permit or tolerate the introduction, use or presence of intoxicating liquors and/or controlled substances upon or about the place of work embraced in this Contract.

Art. XXIII Access to Work

The Owner and the Engineer, and their agents and employees may, for purposes already specified and for any other purpose, enter upon the work and the premises used by the Contractor, and the contractor shall provide safe and proper facilities for this purpose.

Art. XXIV Examination Of Work

The Engineer shall be furnished with every reasonable facility for determining that the work is being performed in accordance with the requirements and intention of this Contract, even to the extent of uncovering or taking down portions of finished work.

Should the work thus exposed or examined prove satisfactory, the uncovering or taking down, the restoring and replacing of materials and the rebuilding of the part shall be considered as extra work, unless the original work was done in the absence of the Engineer of his inspector without his written authorization, in which case that section of the general specifications entitled "Work to Conform" shall govern. Should the work exposed or examined prove unsatisfactory, the uncovering, taking down, replacing and making good shall be at the expense of the Contractor.

Art. XXV Defective Work

The inspection of the work shall not relieve the Contractor of any of his obligations to fulfill his Contract as herein prescribed. Any defective work shall be made good and unsuitable materials shall be rejected and replaced, even though such work and materials have been previously overlooked by the Engineer and accepted or estimated for payment. If the work or any part thereof shall be found defective at any time before the final acceptance of the whole work, the Contractor shall immediately make good such defect, in a manner satisfactory to the Engineer. If any material brought to the site for use in the work or selected for the same, shall be condemned by the Engineer as unsuitable or not in conformance with the specifications, the Contractor shall immediately remove such materials from the vicinity of the work. Any material, furnished by the Owner, which is damaged or rendered defective by the handling or improper installation by the Contractor, his agents or employees, shall be made good and replaced at the Contractor's own expense.

Art. XXVI Protection Against Water And Storm

The Contractor shall take all precautions to prevent damage to the work by storms or water entering the site of the work directly or through the ground. In case of damage by storm or water, the Contractor shall make such repairs or replacements or rebuild such parts of the work as the Engineer may require to assure that the finished work is completed as required by the drawings and specifications.

The Engineer may, at any time, prohibit the carrying out of any work when, in his judgment, the conditions are not suitable or the proper precautions are not being taken, whatever the weather may be and in any season.

Art. XXVII Mistakes Of Contractor

The Contractor shall pay to the Owner all expenses, losses and damages, as determined by the Engineer, incurred in consequence of any defect, omission or mistake of the Contractor, or his employees, or the making good thereof.

Art. XXVIII Right To Materials

Nothing in this Contract shall be construed as vesting in the Contractor any right of property in the materials used after they have been attached or affixed to the work or the soil, but all such materials shall, upon being so attached or affixed, become the property of the Owner.

Art. XXIX Alterations

The Engineer may make alterations in the line, grade, plan, form, dimensions or materials of the work or any part thereof, either before or after the commencement of construction. If such alterations increase or diminish the quantity of work to be done, adjustment for such increase or decrease shall be made at the unit price stipulated for such work under this Contract. If unit prices are not stipulated for such additional work, compensation shall be made under the item for Extra Work. If such alterations diminish the quantity or work to be done, they shall not warrant any claim for damages or for anticipated profits on the work that is eliminated.

Art. XXX Extra Work

The Contractor shall do any work incidental to the proper completion of the Contract which may not be otherwise provided for in these specifications when ordered in writing by the Engineer, either (a) at the price agreed upon before the work is commenced, and stated in the order for the work, or (b) if the Engineer so elects, for the reasonable cost of said work, as determined by the Engineer, plus fifteen percent of such cost. No extra work will be paid for unless specifically ordered as extra work by the Engineer in writing.

The Contractor shall, upon request by the Engineer, furnish itemized statements of the cost of the work ordered and give the Engineer access to the related accounts, bills and vouchers.

The Engineer shall include in the cost of extra work under (b) above, the reasonable cost to the Contractor of all materials used; of all labor, common and skilled; of foremen; and the fair rental of all machinery used for the extra work for the period of such use.

The fair rental for all machinery shall be based upon the most recent edition of "Rental Equipment Rate Guide", as published by the Associated Equipment Distributors, or similar publication approved by the Engineer. Rental for machinery already present on the work or which shall be required or used on the work after the extra work is done, shall be based upon an appropriate fraction of the approved monthly rate schedule. If said work requires the use of machinery not already present or to be later used on the work, then the cost of transportation, not exceeding a distance of l00 miles, of such machinery to and from the work shall be added to the fair rental as accepted by the Engineer in writing prior to the rental of the machine.

The Engineer shall include, in the cost of extra work, the cost to the Contractor of satisfactory insurance covering public liability and bodily injuries to his employees engaged in the extra work and the cost of Social Security, or other direct assessment upon the Contractor's payroll by Federal or other properly authorized public agencies. The Engineer shall not include in the cost for extra work any cost or rental of small tools, buildings or any portion of the time for the Contractor or his Superintendent, or any allowance for use of capital or the premium on the bond as assessed upon the amount of extra work. These items are considered to be covered by the fifteen percent added to the reasonable cost.

Art. XXXA Before Extension Of Time

In accordance with Chapter 30, Section 39N of the General Laws, as amended, the following paragraph is included in its entirety:

"If, during the progress of the work, the Contractor or the awarding authority discovers that the actual subsurface or latent physical conditions encountered at the site differ substantially or materially from those shown on the plans or indicated in the Contract Documents, either the Contractor or the contracting authority may request an equitable adjustment in the Contract price of the Contract applying to work affected by the differing site conditions. A request for such an adjustment shall be in writing and shall be delivered by the party making such claim to the other party as soon as possible after such conditions are discovered. Upon receipt of such a claim from a Contractor, or, upon its own initiative, the contracting authority shall make an investigation of such physical conditions, and, if they differ substantially or materially from those shown on the plans or indicated in the Contract Documents or from those ordinarily encountered and generally recognized as inherent in work of the character provided for in the plans and Contract Documents, and are of such a nature as to cause an increase or decrease in the cost of performance of the work or a change in the construction methods required for the performance of the work, which results in an increase or decrease in the cost of the work, the contracting authority shall make an equitable adjustment in the Contract price and the Contract shall be modified in writing accordingly."

Art. XXXI Extension Of Time On Account Of Extra Work

When extra work is ordered near the completion of the contract, or when extra work is ordered at any time during the progress of the work, which requires, in the opinion of the Engineer, and unavoidable increase of time for the completion of the contract, a suitable extension of the time of completion shall be made.

Art. XXXII Changes Not To Affect Bond

It is distinctly agreed and understood that any changes made in the drawings and specifications for this work, whether such changes increase or decrease the amount of work required, or any change in the manner or time of payments made by the Owner to the Contractor, shall in no way void, release or affect the liability and surety on the bond given by the Contractor.

Art. XXXIII Claims for Damages

If the Contractor claims compensation for any damages sustained by breach of contract or otherwise, whether such claims are based on the fact that due and full credit has not been given the Contract, or for any other cause, he shall promptly, after the sustaining of any such damage, make a written statement of the nature of the damage sustained, to the Engineer. He shall also, on or before the fifteenth day of the month following that in which the damage shall have been sustained, file with

the Engineer an itemized statement of the details and amount of such damage. Unless such statement is made as required, the Contractor's claim for compensation shall be forfeited and invalidated and he shall not be entitled to payment for any such damages.

Art. XXXIV Abandonment Of Work

If any one or more of the following situations, conditions or acts occur, the Owner may, upon written order to the Contractor, with a copy mailed to the home office of the Surety, discontinue all work or any part of the work under this Contract:

1. Abandonment by the Contractor of this Contract.

2. Subletting by the Contractor of this Contract or any part thereof without written consent of the Owner.

3. Assignment of the contract or any part thereof or any claim thereunder except as specified herein.

4. If, in the opinion of the Engineer and certified in writing by the Engineer, the conditions as specified herein regarding the rate of progress of the work is not being fulfilled and/or that the work or any part of the work is being unnecessarily or unreasonably delayed.

5. Violation of any of the provisions of this Contract by the Contractor.

6. Reckless damage to existing Town infrastructure and/or failure to repair purposeful or accidental damage to existing Town infrastructure in a timely manner as determined by the Engineer.

The Contractor shall discontinue such work or part of such work as the Owner shall designate upon receipt of such order.

The Owner may then, by contract or other means as may be determined, complete the work or such part of the work and charge the entire expense for so completing the work or such part of the work to the Contractor. In addition, the Owner, for itself and/or its Contractors, may take possession of and use any materials, equipment, machinery, implements and tools of every description as may be found at the location of said work to make the required completion.

All expenses charged under this article shall be deducted and paid by the Owner out of any money then due or to become due the Contractor under this Contract or any other Contract with the Owner, or any part thereof. In such accounting, the Owner shall not be held to obtain the lowest figures for the work of completing the contract or any part thereof, or for insuring its proper completion but all sums actually paid thereof shall be charged to the Contractor. In case the expenses so charged are less than the sum which would have been payable under this contract, if the same had been completed by the Contractor, the Contractor shall be entitled to receive the difference. In case such expenses shall exceed the said sum, the Contractor shall pay the amount of the excess to the Owner.

Art. XXXV Prices For Work

The Owner shall pay and the Contractor shall receive the prices stipulated in the proposal attached hereto as full compensation for everything furnishing and done by the Contractor under this Contract, including: All work required, but not specifically mentioned; all loss or damage arising out of the nature of the work; all risks of every description connected with the work and all expenses incurred by or in consequence of the suspension or discontinuance of the work as herein specified.

Art. XXXVI Money May Be Retained

The Owner may at any time keep any monies, which would otherwise be payable, and apply the same or as much as may be necessary to the payment of any expenses, losses or

damages, incurred by the Owner and in accordance with provisions of Massachusetts General Law, Chapter 30, Section 39G, as amended by Chapter 506 of the Acts of l976.

Art. XXXVII Progress Estimates

Within five (5) calendar days of the end of each month, the Contractor shall provide an itemized request for payment for work completed to date. Except as hereinafter provided, the Engineer shall, once in each month, within 7 days upon receipt of request for payment, make an estimate in writing of the total amount of the work done to the first of the month, and the amount earned by the Contractor. The Owner shall retain five percent of such estimated value, as determined by the Engineer, as part security for fulfillment of this Contract by the Contractor and shall deduct from the balance all previous payments and all sums to be retained under the provisions of this Contract. The Owner shall make monthly payments, as estimated by the Engineer, to the Contractor of the balance not retained as previously stated, except that payment may be withheld at any time, if the work is not proceeding in accordance with the Contract. The Owner may, if it is deemed expedient to do so, and as determined by the Engineer, cause estimates and payments to be made more frequently than once in each month.

No progress estimate or payment shall be required to be made, when, in the judgment of the Engineer, the total value of the work done since the last estimate amounts to less than three hundred dollars ($300).

Estimates for lump sum items shall be paid in a single payment for the item, only after the item is completed and accepted by the Engineer, unless otherwise allowed under "Measurement and Payment" for an individual item.
Payment will not be made for any materials not incorporated in the work.

Quantities of work shall be measured and paid in accordance with the Measurement and Payment provision stipulated for each item of work stipulated.

Art. XXXVIII Final Estimate And Payment

Upon substantial completion of the work required this Contract, the Contractor shall present in writing to the Engineer *its* certification that the work has been substantially completed. Within twenty-one days thereafter, the Engineer shall present to the Contractor either a written *declaration* that the work has, in fact, been substantially completed, or present an itemized list of incomplete or unsatisfactory work items required by the contract sufficient to demonstrate that the work has not been substantially completed.

Substantial completion shall mean either that the work required by the contract has been completed except for work having a contract price of less than one per cent of the then adjusted total contract price, or substantially all of the work has been completed and

opened to public use except for minor incomplete or unsatisfactory work items that do not materially impair the usefulness of the work required by the contract.

The Engineer may include with such list a notice setting forth a reasonable time, which shall not in any event be prior to the contract completion date, within which the Contractor must achieve substantial completion of the work, as determined by the Engineer. In the event that the awarding authority fails to respond, by presentation of a written declaration or itemized list as aforesaid, to the Contractor's certification within the twenty-one day period, the Contractor's certification shall take effect as the Engineer’s declaration that the work has been substantially completed.

Within sixty-five days after the effective date of the Engineer’s declaration of a substantial completion, the awarding authority shall prepare and forthwith send to the Contractor for acceptance a substantial completion estimate for the quantity and price of the work done and all but one per cent retainage on that work, including the quantity, price and all but one per cent retainage for the undisputed part of each work item and extra work item in dispute but excluding the disputed part thereof, less the estimated cost of completing all incomplete and unsatisfactory work items and less the total periodic payments made to date for the work. The awarding authority also shall deduct from the substantial completion estimate an amount equal to the sum of all demands for direct payment filed by subcontractors and not yet paid to subcontractors or deposited in joint accounts pursuant to section thirty-nine F, but no contract subject to said section thirty-nine F shall contain any other provision authorizing the awarding authority to deduct any amount by virtue of claims asserted against the contract by subcontractors, material suppliers or others.

If the awarding authority fails to prepare and send to the Contractor any substantial completion estimate required by this section on or before the date herein above set forth, the awarding authority shall pay to the Contractor interest on the amount which would have been due to the Contractor pursuant to such substantial completion estimate at the rate of three percentage points above the rediscount rate then charged by the Federal Reserve Bank of Boston from such date to the date on which the awarding authority sends that substantial completion estimate to the Contractor for acceptance or to the date of payment therefor, whichever occurs first. The awarding authority shall include the amount of such interest in the substantial completion estimate.

Within fifteen days after the effective date of the declaration of substantial completion, the awarding authority shall send to the Contractor by certified mail, return receipt requested, a complete list of all incomplete or unsatisfactory work items, and, unless delayed by causes beyond his control, the Contractor shall complete all such work items within forty-five days after the receipt of such list or before the then contract completion date, whichever is later. If the Contractor fails to complete such work within such time, the awarding authority may, subsequent to seven days' written notice to the Contractor by certified mail, return receipt requested, terminate the contract and complete the incomplete or unsatisfactory work items and charge the cost of same to the Contractor.

Within thirty days after receipt by the awarding authority of a notice from the Contractor stating that all of the work required by the contract has been completed, the awarding authority shall prepare and forthwith send to the Contractor for acceptance a final estimate for the quantity and price of the work done and all retainage on that work less all payments made to date, unless the awarding authority's inspection shows that work items required by the contract remain incomplete or unsatisfactory, or that documentation required by the contract has not been completed. If the awarding authority fails to prepare and send to the Contractor the final estimate within thirty days after receipt of notice of completion, the awarding authority shall pay to the Contractor interest on the amount which would have been due to the Contractor pursuant to such final estimate at the rate hereinabove provided from the thirtieth day after such completion until the date on which the awarding authority sends the final estimate to the Contractor for acceptance or the date of payment therefor, whichever occurs first, provided that the awarding authority's inspection shows that no work items required by the contract remain incomplete or unsatisfactory. Interest shall not be paid hereunder on amounts for which interest is required to be paid in connection with the substantial completion estimate as hereinabove provided. The awarding authority shall include the amount of the interest required to be paid hereunder in the final estimate.

The awarding authority shall pay the amount due pursuant to any substantial completion or final estimate within thirty-five days after receipt of written acceptance for such estimate from the Contractor and shall pay interest on the amount due pursuant to such estimate at the rate hereinabove provided from that thirty-fifth day to the date of payment. Within 15 days, 30 days in the case of the commonwealth, after receipt from the Contractor, at the place designated by the awarding authority, if such place is so designated, of a periodic estimate requesting payment of the amount due for the preceding periodic estimate period, the awarding authority shall make a periodic payment to the Contractor for the work performed during the preceding periodic estimate period and for the materials not incorporated in the work but delivered and suitably stored at the site, or at some location agreed upon in writing, to which the Contractor has title or to which a subcontractor has title and has authorized the Contractor to transfer title to the awarding authority, upon certification by the Contractor that he is the lawful owner and that the materials are free from all encumbrances. The awarding authority shall include with each such payment interest on the amount due pursuant to such periodic estimate at the rate herein above provided from the due date. In the case of periodic payments, the contracting authority may deduct from its payment a retention based on its estimate of the fair value of its claims against the Contractor, a retention for direct payments to subcontractors based on demands for same in accordance with the provisions of section thirty-nine F, and a retention to secure satisfactory performance of the contractual work not exceeding five per cent of the approved amount of any periodic payment, and the same right to retention shall apply to bonded subcontractors entitled to direct payment under section thirty-nine F of chapter thirty; provided, that a five per cent value of all items that are planted in the ground shall be deducted from the periodic payments until final acceptance.

No periodic, substantial completion or final estimate or acceptance or payment thereof shall bar a Contractor from reserving all rights to dispute the quantity and amount of, or the failure of the awarding authority to approve a quantity and amount of, all or part of any work item or extra work item.

The Engineer shall also fix the date of completion of the work and incorporate the same into the final estimate, as provided by General Law, Chapter 30, Section 39G, as amended by Chapter 506, of the Acts of l976. a copy of which will be furnished on request.

All prior progress estimates and payments shall be subject to correction in the final estimate and payment.

All liens for labor and materials agreed to be furnished to the Contractor must meet the procedural requirements set forth in General Laws, Chapter 30, Section 39F and 39G respectively.

Art. XXXIX (Reserved)

Art. XL Waivers

Neither the inspection of the owner, or any of its agents, nor any orders, measurement, or certificate by the Engineer, nor any order by the Owner for the payment of money nor any payment for, nor acceptance of, the whole or any part of the work by the Owner, nor any extension of time nor any possession taken by the Owner or its employees, shall constitute a waiver of any provision of this Contract, or of any power herein reserved to the Owner, or any right to damages herein provided. Any waiver of any breach of this Contract shall not be held to be a waiver of any other or subsequent breach. Any remedy provided in this Contract shall be taken and construed as cumulative. That is, in addition to each and every other remedy herein provided, and in addition to all other suits, actions, or legal proceedings, the Owner shall also be entitled, as of right, to a writ of injunction against any breach of any of the provisions of this Contract.

Art. XLI Liability Of Owner

No person, firm, or corporation, other than the signer of this contract as Contractor, now has any interest hereunder, and no claims shall be made or be valid. Neither the Owner nor any agent of the Owner shall be liable for or be held to pay any money, except as herein provided. The acceptance by the Contractor of the payment of the final estimate shall operate as and shall be a release to the Owner and every agent of the Owner, from all claim and liability to the Contractor for anything done or furnished for, or relating to, the work, or for any act or neglect of the Owner or of any person relating to or affecting the work, except the claim against the Owner for the remainder of any amounts kept or retained as herein provided.

Art. XLII Guaranty

The Contractor guarantees that the work to be done under this Contract, and the materials to be furnished by him for use in the construction of the same, will be free from defects or flaws. This guaranty shall be for a period of one year from and following the date of completion. During this Guaranty period the town will withhold 1% from final payment and it will be released on one year anniversary of substantial completion.

If, within any guarantee period, repairs or changes are required in connection with guaranteed work, which in the opinion of the Town is rendered necessary as a result of the use of materials, equipment, or workmanship which are inferior, defective, or not in accordance with the terms of the Contract, the Contractor shall, promptly, upon receipt of notice from the Owner, and at his own expense:

- Place in satisfactory condition in every particular all such guaranteed work and/or correct all defects therein.

- Make good all damage to the site, or equipment or contents thereof; which in the opinion of the Town, is the result of the use of materials equipment or workmanship which are inferior, defective, or not in accordance with the terms of the contract.

- Make good any work or material, or the equipment or site disturbed in fulfilling any such guarantee.

If he fails to do so, the Owner reserves its rights under the bond required herein.

Art. XLIII Failure To Complete Work On Time

The whole work shall have been performed in accordance with the terms of the Contract on or before the date stated in the proposal for completion or the date to which the time of completion shall have been extended under the provisions of this contract.

If the work embraced in the Contract shall not have been physically completed by the time stipulated therein, or, in the event the Contract has been substantially completed and the project opened for traffic as directed in writing by the Engineer, but physical completion of the work is subject to delay because of minor uncompleted items which do not impair the usefulness of the project, the Contractor shall assume, without reimbursement, the entire cost of all traffic officers and inspectors the Engineer determines to be necessary during the period of overrun of time.

Art. XLIV Commencement of Legal Action.

The parties agree that any action or proceedings arising in connection with this Agreement shall be tried and litigated exclusively in the Norfolk Division, Superior Court Department of the Massachusetts Trial Court and no other court or forum, subject to

appeals to the Massachusetts Appeals Court and the Massachusetts Supreme Judicial Court. It is further agreed that the parties to this contract hereby waive their rights to a jury trial.

Each party hereby waives any right it may have to assert the doctrine of forum non convenience or similar doctrine or object to venue with respect to any proceeding brought in accordance with the previous paragraph and stipulates that the Norfolk Division of the Superior Court Department of the Massachusetts Trial Court shall have in personam jurisdiction and venue over each of them for the purposes of litigating any dispute, controversy, or proceeding out of or related to this Agreement. In the event the Contractor commences suit or other proceeding in any other court or forum, it agrees to immediately dismiss its suit or other proceeding and if it fails to do so and the Owner brings a motion to dismiss or otherwise dispose of the suit, the Contractor shall dismiss its suit and be liable to the Owner for the reasonable legal fees and costs needed to have the matter dismissed.

The Contractor hereby authorizes and accepts service of process sufficient for personal jurisdiction in any action against it as contemplated by these paragraphs by postage prepaid, registered mail, return receipt requested, to its address as set forth in this Agreement.

The Contractor shall not enter into any agreement with or employ the services of any sub-contractor unless the agreement with the sub-contractor provide that the sub-contractor is subject to and will comply with the provisions of the preceding paragraphs of this Agreement.

Art. XLV Legal Address Of Contractor

Both the address given in the bid proposal upon which this Contract is founded and the Contractor's office at or near the site of the work are hereby designated as places to either of which notices, letters and other communications to the Contractor shall be certified, mailed or delivered. The delivering at the above named place, or depositing in a postpaid wrapper directed to the first named place, in any post office box, regularly maintained by the Post Office Department, of any notice, letter or other communication to the Contractor, shall be deemed sufficient service thereof upon the Contractor, and the date of said service shall be the date of such delivery or mailing. The first named address may be changed at any time by an instrument in writing, executed and acknowledged by the Contractor and delivered to the Engineer. Nothing herein contained shall be deemed to preclude or render inoperative the service of any notice, letter or other communication upon the Contractor personally.

EXECUTED AS A SEALED INSTRUMENT IN TRIPLICATE.

This _____ day of _____ in the year _____.

This is to certify that funds have been appropriated by the Town of Needham for the purposes set forth in the Contract herein.

_____
Town Accountant

TOWN OF NEEDHAM, MASSACHUSETTS
TOWN MANAGER,
PARTY OF THE FIRST PART

_____
Town of Needham Town Manager

Approved as to form:

_____
Town Counsel

CONTRACTOR, PARTY OF THE SECOND PART

_____

By _____

Title _____

Pursuant to M.G.L. Ch. 62C, Sec. 49A: I certify under the penalties of perjury that I, to my best knowledge and belief, have filed all State tax returns and paid all State taxes required by law.

_____
Soc. Sec. No. or Fed. Ident. No

_____
Signature of Individual or Corporate Name

by:_____
Corporate Officer
(if applicable)

3.2.1 PERFORMANCE BOND

KNOW ALL MEN BY THESE PRESENTS:

That we,_____

_____ organized under (An individual, a partnership, a corporation) the laws of the State of _____, having a usual place of business in _____, as principal, and _____, a corporation, organized under the laws of the State of_____ and having a usual place of business in_____as surety, are holder and stand firmly bound and obligated unto the Town of Needham, Massachusetts, as obligee, in the sum of_____ lawful money of the United States of America, to and for the true payment whereof we bind ourselves, and cash of us, our heirs, executors, administrators, successors, and assigns jointly and severally, firmly by these presents.

WHEREAS, the said principal has by means of a written agreement dated

_____entered into a contract with the said obligee for construction of_____
_____
_____
a copy of which agreement is attached hereto and by reference made a part thereof.

NOW, THEREFORE, THE CONDITION of this obligation is such that if the said principal shall well and truly keep and perform all the agreements, terms and conditions of said Contract on his part to be kept and performed and shall also pay for all labor performed or furnished, and for all materials used or employed in such construction, including lumber so employed which is not incorporated in the work, and for the rental or hire of vehicles, tools, and other appliances and equipment employed in such construction, then this obligation shall be void; otherwise it shall remain in full force and virtue.

> And the surety, for value received, hereby stipulates and agrees that no extension of time, or change in, alteration or addition to the terms of the Contract or to the work to be performed thereunder or the specifications accompanying the same shall in any way affect its obligations on this bond and it does hereby waive notice of any such extension of time, change, alterations or additions to the terms of the Contract or to the work or to the specifications.

EXECUTED AS A SEALED INSTRUMENT IN TRIPLICATE

This_____day of_____in the year_____

PRINCIPAL

Contractor_____

By_____

Title_____

SURETY

Name_____

By_____

Title_____

(Note)

If the Contractor (Principal) is a partnership, the bond should be signed by each of the individuals who are partners.

If the Contractor (Principal) is a corporation, the bond should be signed in its correct corporate name by a duly authorized officer, agent, or attorney-in-fact.

There should be executed an appropriated number of counterparts of the bond corresponding to the number of counterparts of the Contract.

If this bond is signed by an attorney-in-fact, there should be attached to it a certified copy of power of attorney to sign such bond.

3.2.2 PAYMENT AND MATERIALS BOND

KNOW ALL MEN BY THESE PRESENTS:

That we,_____

_____ organized under (An individual, a partnership, a corporation) the laws of the State of _____, having a usual place of business in _____, as principal, and _____, a corporation, organized under the laws of the State of_____ and having a usual place of business in_____as surety, are holder and stand firmly bound and obligated unto the Town of Needham, Massachusetts, as obligee, in the sum of_____ lawful money of the United States of America, to and for the true payment whereof we bind ourselves, and cash of us, our heirs, executors, administrators, successors, and assigns jointly and severally, firmly by these presents.

WHEREAS, the said principal has by means of a written agreement dated

_____entered into a contract with the said obligee for construction of_____
_____
_____
a copy of which agreement is attached hereto and by reference made a part thereof.

NOW, THEREFORE, THE CONDITION of this obligation is such that if the said principal shall well and truly keep and perform all the agreements, terms and conditions of said Contract on his part to be kept and performed and shall also pay for all labor performed or furnished, and for all materials used or employed in such construction, including lumber so employed which is not incorporated in the work, and for the rental or hire of vehicles, tools, and other appliances and equipment employed in such construction, then this obligation shall be void; otherwise it shall remain in full force and virtue.

> And the surety, for value received, hereby stipulates and agrees that no extension of time, or change in, alteration or addition to the terms of the Contract or to the work to be performed thereunder or the specifications accompanying the same shall in any way affect its obligations on this bond and it does hereby waive notice of any such extension of time, change, alterations or additions to the terms of the Contract or to the work or to the specifications.

EXECUTED AS A SEALED INSTRUMENT IN TRIPLICATE

This_____day of_____in the year_____

PRINCIPAL

Contractor_____

By_____

Title_____

SURETY

Name_____

By_____

Title_____

(Note)

If the Contractor (Principal) is a partnership, the bond should be signed by each of the individuals who are partners.

If the Contractor (Principal) is a corporation, the bond should be signed in its correct corporate name by a duly authorized officer, agent, or attorney-in-fact.

There should be executed an appropriated number of counterparts of the bond corresponding to the number of counterparts of the Contract.

If this bond is signed by an attorney-in-fact, there should be attached to it a certified copy of power of attorney to sign such bond.

3.3 CORPORATE CERTIFICATE OF AUTHORITY

I,_____,_____
(Clerk or Secretary as the case may be)

of the _____hereby certify

that a meeting of the Board of Directors of said Corporation was duly held on

the_____day of_____, 20_____ at which a quorum was present and voting and that the following vote was adopted:

"VOTED: that_____, _____
(Officer Authorized) (Title of Officer)

be and he is authorized for and on behalf of the Corporation to approve, sign, affix the Corporate Seal and deliver to the Town of Needham a bond in the sum of the full amount of the Proposal, with a surety company satisfactory to the Owner, as surety will be required for the faithful performance of the Contract; and he is also hereby authorized for and on behalf of the Corporation to approve, sign, affix the Corporate Seal and deliver to the Town of Needham the Contract presented to the meeting for the furnishing of the materials, supplies and services called for therein; the execution, affixing the Corporate Seal and delivery of said Contract and bond by the within named officer shall be deemed to be the document to be approved, signed, the Corporate Seal affixed and delivered as herein authorized."

I further certify that _____ was duly elected
(Officer named in vote)

_____of said Corporation and that such election and the
(Title of Officer in vote)

foregoing vote remain in full force and effect this _____
day of _____, 200_____.

_____
(Clerk or Secretary as the case may be)

Important Note: The date of this Certificate must be no earlier than the date of the surety company bond and the date of the meeting of the Board of Directors at which the above vote was adopted must be no later than the date of the bond but prior to signing.

This page intentionally left blank

3.4 SUPPLEMENTAL EQUAL EMPLOYMENT OPPORTUNITY ANTI-DISCRIMINATION AND AFFIRMATIVE ACTION PROGRAM

Contractors are required to comply with the objectives of the Contract Compliance Procedures of the Minority Business Enterprise Program for the Town of Needham and ensure that appropriate minority manpower utilization targets are achieved for all construction contracts for which direct contract award exceeds $50,000. The following requirements shall be observed.

3.4.1 Definition

For the purposes of this contract, "minority" refers to Asian-Americans, Blacks, Spanish Surnamed Americans, North American Indians and Cape Verdeans. "Commission" refers to the Massachusetts Commission Against Discrimination. "Town" hereinafter refers to the Town of Needham.

3.4.2 Agreements

During the performance of this contract, the Contractor and all of (his) Subcontractors (hereinafter collectively referred to as the Contractor), for himself, his assignees, and successors in interest, agree as follows:

l. In connection with the performance of work under this contract, the Contractor shall not discriminate against any employee or applicant for employment because of race, color, religious creed, national origin, age or sex. The aforesaid provision shall include, but not be limited to, the following: employment upgrading, demotion or transfer; recruitment advertising; recruitment layoff; termination; rates of pay or other forms of compensation; conditions or privileges of employment; and selection of apprenticeship. The Contractor shall post hereafter in conspicuous places, available for employees and applicants for employment, notices to be provided by the Town setting forth the provisions of the Fair Employment Practices Law of the Commonwealth (M.G.L. Chapter l5lB).

2. In connection with the performance of work under this contract, the Contractor shall undertake in good faith affirmative action measures designed to eliminate any discriminatory barriers in the terms and conditions of employment on the grounds of race, color, religious creed, national origin, age or sex, and to eliminate and remedy any effects of such discrimination in the past. Such affirmative action shall entail positive and aggressive measures to ensure equal opportunity in the areas of hiring, upgrading, demotion or transfer, recruitment, layoff or termination, rate of compensation, and in-service or apprenticeship training programs. This affirmative action shall include all action required to guarantee equal opportunity in employment for all persons, regardless of race, color, religious creed, national origin, age or sex. A purpose of this provision is to ensure to the fullest extent

possible an adequate supply of skilled tradesmen for this and future Town public construction projects.

3.4.3 Employment Practices

As part of his obligation of remedial action under the foregoing section, the Contractor shall maintain on this project a not less than 5% ratio of minority employee man hours to total man hours in each job category including but not limited to brick-layers, carpenters, cement masons, electricians, ironworkers, operating engineers and those "classes of work" enumerated in Section 44C of Chapter l49 of the Massachusetts General Laws.

In the hiring of minority journeymen, apprentices, trainees and advanced trainees, the Contractor shall rely on referrals from a multi-employer affirmative action program approved by the Town, traditional referral methods utilized by the construction industry, and referrals from agencies, not more than three in number at any one time, designated by the Liaison Committee or the Town.

3.4.4 Liaison Committee

At the discretion of either the Commission or the Town, there may be established for the life of this contract, a body to be known as the Liaison Committee. The Liaison Committee shall be composed of one representative each from the agency or agencies administering this project, hereinafter called the administering agency, the Town and such other representatives as may be designated by the Town in conjunction with the administering agency.

The Contractor (or his agent, if any, designated by him as the on-site equal employment opportunity officer) shall recognize the Liaison Committee as an affirmative action body, and shall establish a continuing working relationship with the Liaison Committee, consulting with the Liaison Committee on all matters related to minority recruitment, referral, employment and training.

The Contractor shall prepare projected manning tables on a quarterly basis. These shall be broken down into projections, by week, or workers required in each trade. Copies shall be furnished one week in advance of the commencement of the period covered, and also when updated, to the Town and Liaison Committee.

Records of employment referral orders, prepared by the Contractor, shall be available to the Town and to the Liaison Committee on request.

The Contractor shall prepare weekly reports in a form approved by the Town of hours worked in each trade by each employee, identified as minority or non-minority. Copies of these shall be provided at the end of each week to the Town and to the Liaison Committee.

3.4.5 Subcontractors

If the Contractor shall use any subcontractor on any work performed under this contract, he shall take affirmative action to negotiate with qualified minority subcontractors. This affirmative action shall cover both pre-bid and post-bid periods. It shall include notification to the Office of Minority Business Assistance (within the Executive Office of Commerce and Development) or its designee, while bids are in preparation, of all products, work or services for which the Contractor intends to negotiate bids.

3.4.6 Employment Preferences

Contractor shall give preference, first, to citizens of the Commonwealth who have served in the armed forces of the United States in time of war and have been honorably discharged therefrom or released from active duty therein, and who are qualified to perform the work to which the employment relates, and secondly, to citizens of the Commonwealth generally, and, if such cannot be obtained in sufficient numbers, then to citizens of the United States.

3.4.7 Right of Access

A designee of the Town and a designee of the Liaison Committee shall each have right of access to the construction site.

3.4.8 Compliance With Requirements

The Contractor shall comply with the provisions of Executive Order No. 74, as amended by Executive Order No. ll6 dated May l, l975, and of Chapter l5lB as amended, of the Massachusetts General Laws, both of which are herein incorporated by reference and made a part of this contract.

3.4.9 Non-Discrimination

The Contractor, in the performance of all work after award, and prior to completion of the contract work, will not discriminate on grounds of race, color, religious creed, national origin, age or sex in employment practices, in the selection or retention of subcontractors, or in the procurement of materials and rentals of equipment.

3.4.10 Solicitations for Sub-Contracts and for the Procurement of Material and Equipment

In all solicitations either by competitive bidding or negotiation made by the Contractor either for work to be performed under a subcontract or for the procurement of materials or equipment, each potential subcontractor supplier shall be notified in writing by the Contractor of the Contractor's obligations under this contract relative to non-discrimination and affirmative action.

3.4.11 Bidders Certification Requirement

The following certification statement will be inserted in the bid document just above the bidder's signature, as a substitute for the present bidder certification form:

"The bidder hereby certifies he shall comply with the minority manpower ratio and specific action steps contained in the appendix EEO attached hereto, including compliance with the minority contractor compliance specified in Section V of said appendix. The contractor receiving the award of the contract shall be required to obtain from each of its subcontractors and submit to the contracting or administering agency prior to the performance of any work under said contract a certification by said subcontractor, regardless of tier, that it will comply with the minority manpower ratio and specific affirmative action steps contained in the appendix EEO."

3.4.12 Contractor's Certification Requirement

The Contractor's certification form must be signed by all successful low bidder(s) prior to award by the contracting agency. (See attachment).

3.4.13 Compliance Information, Reports and Sanctions

l. The Contractor will provide all information and reports required by the administering agency or the Town on instructions issued by either of them and will permit access to its facilities and any books, records, accounts and other sources of information which may be determined by the Town to affect the employment of personnel. This provision shall apply only to information pertinent to the Town's supplementary affirmative action contract requirements. Where information required is in the exclusive possession of another who fails or refuses to furnish this information, the Contractor shall so certify to the administering agency or the Town as appropriate and shall set forth what efforts he has made to obtain the information.

2. Whenever the administering agency, the Town, or the Liaison Committee believes the General Contractor or any Subcontractor may not be operating in compliance with the terms of this Section, the Town directly, or through its designated agent, shall conduct an appropriate investigation, and may confer with the parties, to determine if such Contractor is operating in compliance with the terms of this Section. If the Town or its agent finds the General Contractor or any subcontractor not in compliance, it shall make a preliminary report on non-compliance, and notify such Contractor in writing of such steps as will in the judgment of the Town or its agent bring such Contractor into compliance. In the event that such Contractor fails or refuses to fully perform such steps, the Town shall make a final report of non-compliance, and recommend to the administering agency the imposition of one or more of the sanctions listed below. If, however, the Town

believes the General Contractor or any Subcontractor has taken or is taking every possible measure to achieved compliance, it shall not make a final report of non-compliance. Within fourteen days of the receipt of the recommendations of the Town, the administering agency shall move to impose one or more of the following sanctions, as it may deem appropriate to attain full and effective enforcement.

a. The recovery by the administering agency from the General Contractor of l/l00 of l% of the contract award price or $l,000, whichever sum is greater, in the nature of liquidated damages or, if a Subcontractor is in noncompliance, the recovery by the administering agency from the General Contractor, to be assessed by the General Contractor as a back charge against the Subcontractor, of l/l0 of l% of the subcontract price, or $400, whichever sum is greater, in the nature of liquidated damages, for each week that such party fails or refuses to comply;

b. The suspension of any payment or part thereof due under the contract until such time as the General Contractor or any Subcontractor is able to demonstrate his compliance with the terms of the contract;

c. The termination, or cancellation, of the contract, in whole or in part, unless the General Contractor or any Subcontractor is able to demonstrate within a specified time his compliance with the terms of the contract;

d. The denial to the General Contractor or any Subcontractor of the right to participate in any future contracts awarded by the administering agency for a period of up to three years.

3. If at any time after the imposition of one or more of the above sanctions, a Contractor is able to demonstrate that he is in compliance with this Section, he may request the administering agency, in consultation with the Town, to suspend the sanctions conditionally, pending a final determination by the Town as to whether the Contractor is in compliance. Upon final determination of the Town, the administering agency, based on the recommendation of the Town, shall lift the sanctions or reimpose them.

4. Sanctions enumerated under Section 3.4.13.2 shall not be imposed by the administering agency except after an adjudicatory proceeding, as that term is used M.G.L. c. 30A, has been conducted. No investigation by the Town or its agent shall be initiated without prior notice to the Contractor.

3.4.14 Severability

The provisions of this section are severable, and if any of these provisions shall be held unconstitutional by any court of competent jurisdiction, the decision of such court shall not affect or impair any of the remaining provisions.

Project Name: **16-Inch Water Main Replacement**

Contract No.: **14DPW038C**

3.4.15 Contractor's Certification

A contractor will not be eligible for award of a contract unless such contractor has submitted the following certification, which is deemed a part of the resulting contract:

_____certifies that:

1. it intends to use the following listed construction trades in the work under the Contract

   _____

   _____

   _____

   _____; and

2. it will comply with the minority manpower ratio and specific affirmative action steps contained herein; and

3. it will obtain from each of its subcontractors and submit to the contracting or administering agency prior to the award of any subcontractor under this contract the subcontractor certification required by these bid conditions

_____

(Signature of authorized representative of Contractor)

Project Name: **16-Inch Water Main Replacement**

Contract No.: **14DPW038C**

3.4.16 Subcontractors' Certification

Prior to the award of any subcontract, regardless of tier, the prospective subcontractor must execute and submit to the Prime Contractor the following certification, which will be deemed a part of the resulting subcontract:

_____certifies that:

l. it intends to use the following listed construction trades in the work under the subcontract_____

_____

_____

_____; and

2. it will comply with the minority manpower ratio and specific affirmative action steps contained herein; and

3. it will obtain from each of the subcontractors prior to the award of any subcontract under this subcontract the subcontractor certification required by these bid conditions.

_____
(Signature of authorized representative of subcontractor)

In order to ensure that the said subcontractors' certification becomes a part of all subcontracts under the prime contract, no subcontract shall be executed until an authorized representative of the Town agency (or agencies) administering this project has determined, in writing, that the said certification has been incorporated in such subcontract, regardless of tier. Any subcontract executed without such written approval shall be void.

3.5 Minimum Wage Rates (attached)

THE COMMONWEALTH OF MASSACHUSETTS
EXECUTIVE OFFICE OF LABOR AND WORKFORCE DEVELOPMENT
DEPARTMENT OF LABOR STANDARDS

Prevailing Wage Rates

As determined by the Director under the provisions of the Massachusetts General Laws, Chapter 149, Sections 26 to 27H

DEVAL L. PATRICK
Governor

TIMOTHY P. MURRAY
Lt. Governor

JOANNE F. GOLDSTEIN
Secretary

HEATHER E. ROWE
Director

Awarding Authority: Town of Needham

Contract Number: 14DPW038C **City/Town:** NEEDHAM

Description of Work: Unit Price Contract Bid (see Sect. 3.1, Art. I) to Furnish labor, materials and equipment necessary for installing approximately 2,900 linear feet of 16" ductile iron water main, gate valves, services

Job Location: Chesnut St, Oak St, Marked Tree Rd, Central Ave

Information about Prevailing Wage Schedules for Awarding Authorities and Contractors

- This wage schedule applies only to the specific project referenced at the top of this page and uniquely identified by the "Wage Request Number" on all pages of this schedule.
- Awarding authorities must request an updated wage schedule from the Department of Labor Standards ("DLS") if it has not opened bids or selected a contractor within 90 days of the date of issuance of the wage schedule.
- The wage schedule shall be incorporated in any advertisement or call for bids for the project as required by M.G.L. c. 149, § 27. Once a contractor has been selected by the awarding authority, the wage schedule shall be made a part of the contract for that project. The wage schedule must be posted in a conspicuous place at the work site during the life of the project in accordance with M.G.L. c. 149, § 27. The wages listed on the wage schedule must be paid to employees performing construction work on the project regardless of whether they are employed by the prime contractor, a filed sub-bidder, or any sub-contractor.
- All apprentices working on the project are required to be registered with the Massachusetts Division of Apprentice Training (DAT). Apprentices must keep his/her apprentice identification card on his/her person during all work hours on the project. If an apprentice rate is listed on the prevailing wage schedule for the trade in which an apprentice is registered with the DAT, the apprentice may be paid the lower apprentice wage rate at the applicable step as provided on the prevailing wage schedule. **If an apprentice rate is not listed on the prevailing wage schedule for the trade in which an apprentice is registered with the DAT, the apprentice must be paid the journeyworker's rate for the trade.**
- The wage rates will remain in effect for the duration of the project, except in the case of multi-year public construction projects. For construction projects lasting longer than one year, awarding authorities must request an updated wage schedule. Awarding authorities are required to request these updates no later than two weeks before the anniversary of the date the contract was executed by the awarding authority and the general contractor. Contractors are required to obtain the wage schedules from awarding authorities, and to pay no less than these rates to covered workers. The annual update requirement is not applicable to 27F "rental of equipment" contracts.
- Every contractor or subcontractor which performs construction work on the project is required to submit weekly payroll reports directly to the awarding authority and keep them on file for three years. Each weekly payroll report must contain: the employee's name, address, occupational classification, hours worked, and wages paid. Do not submit weekly payroll reports to DLS. A sample of a payroll reporting form may be obtained at http://www.mass.gov/dols/pw.
- Contractors with questions about the wage rates or classifications included on the wage schedule have an affirmative obligation to inquire with DLS at (617) 626-6953.
- Employees not receiving the prevailing wage rate set forth on the wage schedule may report the violation to the Fair Labor Division of the office of the Attorney General at (617) 727-3465.
- Failure of a contractor or subcontractor to pay the prevailing wage rates listed on the wage schedule to all employees who perform construction work on the project is a violation of the law and subjects the contractor or subcontractor to civil and criminal penalties.

Issue Date: 06/24/2013 **Wage Request Number:** 20130624-024

Classification	Effective Date	Base Wage	Health	Pension	Supplemental Unemployment	Total Rate
Construction						
(2 AXLE) DRIVER - EQUIPMENT *TEAMSTERS JOINT COUNCIL NO. 10 ZONE A*	12/01/2012	$31.55	$8.91	$8.00	$0.00	$48.46
(3 AXLE) DRIVER - EQUIPMENT *TEAMSTERS JOINT COUNCIL NO. 10 ZONE A*	12/01/2012	$31.62	$8.91	$8.00	$0.00	$48.53
(4 & 5 AXLE) DRIVER - EQUIPMENT *TEAMSTERS JOINT COUNCIL NO. 10 ZONE A*	12/01/2012	$31.74	$8.91	$8.00	$0.00	$48.65
ADS/SUBMERSIBLE PILOT *PILE DRIVER LOCAL 56 (ZONE 1)*	08/01/2012	$82.32	$9.80	$17.67	$0.00	$109.79
	08/01/2013	$85.47	$9.80	$17.67	$0.00	$112.94
	08/01/2014	$88.62	$9.80	$17.67	$0.00	$116.09
	08/01/2015	$91.77	$9.80	$17.67	$0.00	$119.24
AIR TRACK OPERATOR *LABORERS - ZONE 2*	06/01/2013	$30.60	$7.10	$11.80	$0.00	$49.50
	12/01/2013	$31.10	$7.10	$11.80	$0.00	$50.00
	06/01/2014	$31.60	$7.10	$11.80	$0.00	$50.50
	12/01/2014	$32.10	$7.10	$11.80	$0.00	$51.00
	06/01/2015	$32.60	$7.10	$11.80	$0.00	$51.50
	12/01/2015	$33.10	$7.10	$11.80	$0.00	$52.00
	06/01/2016	$33.60	$7.10	$11.80	$0.00	$52.50
	12/01/2016	$34.35	$7.10	$11.80	$0.00	$53.25
For apprentice rates see "Apprentice- LABORER"						
ASBESTOS REMOVER - PIPE / MECH. EQUIPT. *HEAT & FROST INSULATORS LOCAL 6 (BOSTON)*	06/01/2013	$29.88	$10.40	$5.95	$0.00	$46.23
	12/01/2013	$30.68	$10.40	$5.95	$0.00	$47.03
	06/01/2014	$31.58	$10.40	$5.95	$0.00	$47.93
	12/01/2014	$32.48	$10.40	$5.95	$0.00	$48.83
	06/01/2015	$33.43	$10.40	$5.95	$0.00	$49.78
	12/01/2015	$34.38	$10.40	$5.95	$0.00	$50.73
ASPHALT RAKER *LABORERS - ZONE 2*	06/01/2013	$30.10	$7.10	$11.80	$0.00	$49.00
	12/01/2013	$30.60	$7.10	$11.80	$0.00	$49.50
	06/01/2014	$31.10	$7.10	$11.80	$0.00	$50.00
	12/01/2014	$31.60	$7.10	$11.80	$0.00	$50.50
	06/01/2015	$32.10	$7.10	$11.80	$0.00	$51.00
	12/01/2015	$32.60	$7.10	$11.80	$0.00	$51.50
	06/01/2016	$33.10	$7.10	$11.80	$0.00	$52.00
	12/01/2016	$33.85	$7.10	$11.80	$0.00	$52.75
For apprentice rates see "Apprentice- LABORER"						
ASPHALT/CONCRETE/CRUSHER PLANT-ON SITE *OPERATING ENGINEERS LOCAL 4*	06/01/2013	$40.34	$10.00	$13.55	$0.00	$63.89
	12/01/2013	$41.12	$10.00	$13.55	$0.00	$64.67
For apprentice rates see "Apprentice- OPERATING ENGINEERS"						
BACKHOE/FRONT-END LOADER *OPERATING ENGINEERS LOCAL 4*	06/01/2013	$40.34	$10.00	$13.55	$0.00	$63.89
	12/01/2013	$41.12	$10.00	$13.55	$0.00	$64.67
For apprentice rates see "Apprentice- OPERATING ENGINEERS"						

Classification	Effective Date	Base Wage	Health	Pension	Supplemental Unemployment	Total Rate
BARCO-TYPE JUMPING TAMPER *LABORERS - ZONE 2*	06/01/2013	$30.10	$7.10	$11.80	$0.00	$49.00
	12/01/2013	$30.60	$7.10	$11.80	$0.00	$49.50
	06/01/2014	$31.10	$7.10	$11.80	$0.00	$50.00
	12/01/2014	$31.60	$7.10	$11.80	$0.00	$50.50
	06/01/2015	$32.10	$7.10	$11.80	$0.00	$51.00
	12/01/2015	$32.60	$7.10	$11.80	$0.00	$51.50
	06/01/2016	$33.10	$7.10	$11.80	$0.00	$52.00
	12/01/2016	$33.85	$7.10	$11.80	$0.00	$52.75
For apprentice rates see "Apprentice- LABORER"						
BLOCK PAVER, RAMMER / CURB SETTER *LABORERS - ZONE 2*	06/01/2013	$30.60	$7.10	$11.80	$0.00	$49.50
	12/01/2013	$31.10	$7.10	$11.80	$0.00	$50.00
	06/01/2014	$31.60	$7.10	$11.80	$0.00	$50.50
	12/01/2014	$32.10	$7.10	$11.80	$0.00	$51.00
	06/01/2015	$32.60	$7.10	$11.80	$0.00	$51.50
	12/01/2015	$33.10	$7.10	$11.80	$0.00	$52.00
	06/01/2016	$33.60	$7.10	$11.80	$0.00	$52.50
	12/01/2016	$34.35	$7.10	$11.80	$0.00	$53.25
For apprentice rates see "Apprentice- LABORER"						
BOILER MAKER *BOILERMAKERS LOCAL 29*	01/01/2010	$37.70	$6.97	$11.18	$0.00	$55.85

Apprentice - *BOILERMAKER - Local 29*

Effective Date - 01/01/2010

Step	percent	Apprentice Base Wage	Health	Pension	Supplemental Unemployment	Total Rate
1	65	$24.51	$6.97	$11.18	$0.00	$42.66
2	65	$24.51	$6.97	$11.18	$0.00	$42.66
3	70	$26.39	$6.97	$11.18	$0.00	$44.54
4	75	$28.28	$6.97	$11.18	$0.00	$46.43
5	80	$30.16	$6.97	$11.18	$0.00	$48.31
6	85	$32.05	$6.97	$11.18	$0.00	$50.20
7	90	$33.93	$6.97	$11.18	$0.00	$52.08
8	95	$35.82	$6.97	$11.18	$0.00	$53.97

Notes:

Apprentice to Journeyworker Ratio:1:5

BRICK/STONE/ARTIFICIAL MASONRY (INCL. MASONRY WATERPROOFING) *BRICKLAYERS LOCAL 3 (NEWTON)*	02/01/2013	$47.41	$10.18	$17.83	$0.00	$75.42
	08/01/2013	$48.31	$10.18	$17.90	$0.00	$76.39
	02/01/2014	$48.87	$10.18	$17.90	$0.00	$76.95
	08/01/2014	$49.77	$10.18	$17.97	$0.00	$77.92
	02/01/2015	$50.33	$10.18	$17.97	$0.00	$78.48
	08/01/2015	$51.23	$10.18	$18.04	$0.00	$79.45
	02/01/2016	$51.80	$10.18	$18.04	$0.00	$80.02
	08/01/2016	$52.70	$10.18	$18.12	$0.00	$81.00
	02/01/2017	$53.27	$10.18	$18.12	$0.00	$81.57

Classification	Effective Date	Base Wage	Health	Pension	Supplemental Unemployment	Total Rate

Apprentice - *BRICK/PLASTER/CEMENT MASON - Local 3 Newton*

Effective Date - 02/01/2013

Step	percent	Apprentice Base Wage	Health	Pension	Supplemental Unemployment	Total Rate
1	50	$23.71	$10.18	$17.83	$0.00	$51.72
2	60	$28.45	$10.18	$17.83	$0.00	$56.46
3	70	$33.19	$10.18	$17.83	$0.00	$61.20
4	80	$37.93	$10.18	$17.83	$0.00	$65.94
5	90	$42.67	$10.18	$17.83	$0.00	$70.68

Effective Date - 08/01/2013

Step	percent	Apprentice Base Wage	Health	Pension	Supplemental Unemployment	Total Rate
1	50	$24.16	$10.18	$17.90	$0.00	$52.24
2	60	$28.99	$10.18	$17.90	$0.00	$57.07
3	70	$33.82	$10.18	$17.90	$0.00	$61.90
4	80	$38.65	$10.18	$17.90	$0.00	$66.73
5	90	$43.48	$10.18	$17.90	$0.00	$71.56

Notes:

Apprentice to Journeyworker Ratio:1:5

BULLDOZER/GRADER/SCRAPER *OPERATING ENGINEERS LOCAL 4*	06/01/2013	$39.96	$10.00	$13.55	$0.00	$63.51
	12/01/2013	$40.74	$10.00	$13.55	$0.00	$64.29
For apprentice rates see "Apprentice- OPERATING ENGINEERS"						
CAISSON & UNDERPINNING BOTTOM MAN *LABORERS - FOUNDATION AND MARINE*	06/01/2013	$34.20	$7.10	$12.60	$0.00	$53.90
	12/01/2013	$34.95	$7.10	$12.60	$0.00	$54.65
	06/01/2014	$35.70	$7.10	$12.60	$0.00	$55.40
	12/01/2014	$36.45	$7.10	$12.60	$0.00	$56.15
	06/01/2015	$37.20	$7.10	$12.60	$0.00	$56.90
	12/01/2015	$37.95	$7.10	$12.60	$0.00	$57.65
	06/01/2016	$38.70	$7.10	$12.60	$0.00	$58.40
	12/01/2016	$39.70	$7.10	$12.60	$0.00	$59.40
For apprentice rates see "Apprentice- LABORER"						
CAISSON & UNDERPINNING LABORER *LABORERS - FOUNDATION AND MARINE*	06/01/2013	$33.05	$7.10	$12.60	$0.00	$52.75
	12/01/2013	$33.80	$7.10	$12.60	$0.00	$53.50
	06/01/2014	$34.55	$7.10	$12.60	$0.00	$54.25
	12/01/2014	$35.30	$7.10	$12.60	$0.00	$55.00
	06/01/2015	$36.05	$7.10	$12.60	$0.00	$55.75
	12/01/2015	$36.80	$7.10	$12.60	$0.00	$56.50
	06/01/2016	$37.55	$7.10	$12.60	$0.00	$57.25
	12/01/2016	$38.55	$7.10	$12.60	$0.00	$58.25
For apprentice rates see "Apprentice- LABORER"						

Classification	Effective Date	Base Wage	Health	Pension	Supplemental Unemployment	Total Rate
CAISSON & UNDERPINNING TOP MAN *LABORERS - FOUNDATION AND MARINE*	06/01/2013	$33.05	$7.10	$12.60	$0.00	$52.75
	12/01/2013	$33.80	$7.10	$12.60	$0.00	$53.50
	06/01/2014	$34.55	$7.10	$12.60	$0.00	$54.25
	12/01/2014	$35.30	$7.10	$12.60	$0.00	$55.00
	06/01/2015	$36.05	$7.10	$12.60	$0.00	$55.75
	12/01/2015	$36.80	$7.10	$12.60	$0.00	$56.50
	06/01/2016	$37.55	$7.10	$12.60	$0.00	$57.25
	12/01/2016	$38.55	$7.10	$12.60	$0.00	$58.25
For apprentice rates see "Apprentice- LABORER"						
CARBIDE CORE DRILL OPERATOR *LABORERS - ZONE 2*	06/01/2013	$30.10	$7.10	$11.80	$0.00	$49.00
	12/01/2013	$30.60	$7.10	$11.80	$0.00	$49.50
	06/01/2014	$31.10	$7.10	$11.80	$0.00	$50.00
	12/01/2014	$31.60	$7.10	$11.80	$0.00	$50.50
	06/01/2015	$32.10	$7.10	$11.80	$0.00	$51.00
	12/01/2015	$32.60	$7.10	$11.80	$0.00	$51.50
	06/01/2016	$33.10	$7.10	$11.80	$0.00	$52.00
	12/01/2016	$33.85	$7.10	$11.80	$0.00	$52.75
For apprentice rates see "Apprentice- LABORER"						
CARPENTER *CARPENTERS -ZONE 2 (Eastern Massachusetts)*	03/01/2013	$33.92	$9.80	$15.61	$0.00	$59.33
	09/01/2013	$34.53	$9.80	$15.61	$0.00	$59.94
	03/01/2014	$35.13	$9.80	$15.61	$0.00	$60.54
	09/01/2014	$35.90	$9.80	$15.61	$0.00	$61.31
	03/01/2015	$36.67	$9.80	$15.61	$0.00	$62.08

Classification	Effective Date	Base Wage	Health	Pension	Supplemental Unemployment	Total Rate

Apprentice - *CARPENTER - Zone 2 Eastern MA*

Effective Date - 03/01/2013

Step	percent	Apprentice Base Wage	Health	Pension	Supplemental Unemployment	Total Rate
1	50	$16.96	$9.80	$1.57	$0.00	$28.33
2	60	$20.35	$9.80	$1.57	$0.00	$31.72
3	70	$23.74	$9.80	$10.90	$0.00	$44.44
4	75	$25.44	$9.80	$10.90	$0.00	$46.14
5	80	$27.14	$9.80	$12.47	$0.00	$49.41
6	80	$27.14	$9.80	$12.47	$0.00	$49.41
7	90	$30.53	$9.80	$14.04	$0.00	$54.37
8	90	$30.53	$9.80	$14.04	$0.00	$54.37

Effective Date - 09/01/2013

Step	percent	Apprentice Base Wage	Health	Pension	Supplemental Unemployment	Total Rate
1	50	$17.27	$9.80	$1.57	$0.00	$28.64
2	60	$20.72	$9.80	$1.57	$0.00	$32.09
3	70	$24.17	$9.80	$10.90	$0.00	$44.87
4	75	$25.90	$9.80	$10.90	$0.00	$46.60
5	80	$27.62	$9.80	$12.47	$0.00	$49.89
6	80	$27.62	$9.80	$12.47	$0.00	$49.89
7	90	$31.08	$9.80	$14.04	$0.00	$54.92
8	90	$31.08	$9.80	$14.04	$0.00	$54.92

Notes:

Apprentice to Journeyworker Ratio:1:5

CEMENT MASONRY/PLASTERING *BRICKLAYERS LOCAL 3 (NEWTON)*	01/01/2013	$42.57	$10.65	$18.61	$1.30	$73.13
	07/01/2013	$42.74	$10.65	$18.61	$1.30	$73.30
	01/01/2014	$43.66	$10.65	$18.61	$1.30	$74.22
	07/01/2014	$44.26	$10.65	$18.61	$1.30	$74.82
	01/01/2015	$45.20	$10.65	$18.61	$1.30	$75.76
	07/01/2015	$45.78	$10.65	$18.61	$1.30	$76.34
	01/01/2016	$46.70	$10.65	$18.61	$1.30	$77.26

Classification	Effective Date	Base Wage	Health	Pension	Supplemental Unemployment	Total Rate

Apprentice - *CEMENT MASONRY/PLASTERING - Eastern Mass (Newton)*

Effective Date - 01/01/2013

Step	percent	Apprentice Base Wage	Health	Pension	Supplemental Unemployment	Total Rate
1	50	$21.29	$10.65	$12.11	$1.30	$45.35
2	60	$25.54	$10.65	$13.61	$1.30	$51.10
3	65	$27.67	$10.65	$14.61	$1.30	$54.23
4	70	$29.80	$10.65	$15.61	$1.30	$57.36
5	75	$31.93	$10.65	$16.61	$1.30	$60.49
6	80	$34.06	$10.65	$17.61	$1.30	$63.62
7	90	$38.31	$10.65	$18.61	$1.30	$68.87

Effective Date - 07/01/2013

Step	percent	Apprentice Base Wage	Health	Pension	Supplemental Unemployment	Total Rate
1	50	$21.37	$10.65	$12.11	$1.30	$45.43
2	60	$25.64	$10.65	$13.61	$1.30	$51.20
3	65	$27.78	$10.65	$14.61	$1.30	$54.34
4	70	$29.92	$10.65	$15.61	$1.30	$57.48
5	75	$32.06	$10.65	$16.61	$1.30	$60.62
6	80	$34.19	$10.65	$17.61	$1.30	$63.75
7	90	$38.47	$10.65	$18.61	$1.30	$69.03

Notes:

Steps 3,4 are 500 hrs. All other steps are 1,000 hrs.

Apprentice to Journeyworker Ratio:1:3

CHAIN SAW OPERATOR *LABORERS - ZONE 2*	06/01/2013	$30.10	$7.10	$11.80	$0.00	$49.00
	12/01/2013	$30.60	$7.10	$11.80	$0.00	$49.50
	06/01/2014	$31.10	$7.10	$11.80	$0.00	$50.00
	12/01/2014	$31.60	$7.10	$11.80	$0.00	$50.50
	06/01/2015	$32.10	$7.10	$11.80	$0.00	$51.00
	12/01/2015	$32.60	$7.10	$11.80	$0.00	$51.50
	06/01/2016	$33.10	$7.10	$11.80	$0.00	$52.00
	12/01/2016	$33.85	$7.10	$11.80	$0.00	$52.75
For apprentice rates see "Apprentice- LABORER"						
CLAM SHELLS/SLURRY BUCKETS/HEADING MACHINES *OPERATING ENGINEERS LOCAL 4*	06/01/2013	$41.34	$10.00	$13.55	$0.00	$64.89
	12/01/2013	$42.12	$10.00	$13.55	$0.00	$65.67
For apprentice rates see "Apprentice- OPERATING ENGINEERS"						
COMPRESSOR OPERATOR *OPERATING ENGINEERS LOCAL 4*	06/01/2013	$28.19	$10.00	$13.55	$0.00	$51.74
	12/01/2013	$28.74	$10.00	$13.55	$0.00	$52.29
For apprentice rates see "Apprentice- OPERATING ENGINEERS"						
DELEADER (BRIDGE) *PAINTERS LOCAL 35 - ZONE 2*	01/01/2013	$45.01	$7.80	$15.60	$0.00	$68.41

Classification	Effective Date	Base Wage	Health	Pension	Supplemental Unemployment	Total Rate

Apprentice - *PAINTER Local 35 - BRIDGES/TANKS*

Effective Date - 01/01/2013

Step	percent	Apprentice Base Wage	Health	Pension	Supplemental Unemployment	Total Rate
1	50	$22.51	$7.80	$0.00	$0.00	$30.31
2	55	$24.76	$7.80	$3.52	$0.00	$36.08
3	60	$27.01	$7.80	$3.84	$0.00	$38.65
4	65	$29.26	$7.80	$4.16	$0.00	$41.22
5	70	$31.51	$7.80	$13.68	$0.00	$52.99
6	75	$33.76	$7.80	$14.00	$0.00	$55.56
7	80	$36.01	$7.80	$14.32	$0.00	$58.13
8	90	$40.51	$7.80	$14.96	$0.00	$63.27

Notes:

Steps are 750 hrs.

Apprentice to Journeyworker Ratio:1:1

DEMO: ADZEMAN *LABORERS - ZONE 2* For apprentice rates see "Apprentice- LABORER"	12/01/2011	$31.80	$7.10	$12.45	$0.00	$51.35
DEMO: BACKHOE/LOADER/HAMMER OPERATOR *LABORERS - ZONE 2* For apprentice rates see "Apprentice- LABORER"	12/01/2011	$32.80	$7.10	$12.45	$0.00	$52.35
DEMO: BURNERS *LABORERS - ZONE 2* For apprentice rates see "Apprentice- LABORER"	12/01/2011	$32.55	$7.10	$12.45	$0.00	$52.10
DEMO: CONCRETE CUTTER/SAWYER *LABORERS - ZONE 2* For apprentice rates see "Apprentice- LABORER"	12/01/2011	$32.80	$7.10	$12.45	$0.00	$52.35
DEMO: JACKHAMMER OPERATOR *LABORERS - ZONE 2* For apprentice rates see "Apprentice- LABORER"	12/01/2011	$32.55	$7.10	$12.45	$0.00	$52.10
DEMO: WRECKING LABORER *LABORERS - ZONE 2* For apprentice rates see "Apprentice- LABORER"	12/01/2011	$31.80	$7.10	$12.45	$0.00	$51.35
DIRECTIONAL DRILL MACHINE OPERATOR *OPERATING ENGINEERS LOCAL 4* For apprentice rates see "Apprentice- OPERATING ENGINEERS"	06/01/2013	$39.96	$10.00	$13.55	$0.00	$63.51
	12/01/2013	$40.74	$10.00	$13.55	$0.00	$64.29
DIVER *PILE DRIVER LOCAL 56 (ZONE 1)*	08/01/2012	$54.88	$9.80	$17.67	$0.00	$82.35
	08/01/2013	$56.98	$9.80	$17.67	$0.00	$84.45
	08/01/2014	$59.08	$9.80	$17.67	$0.00	$86.55
	08/01/2015	$61.18	$9.80	$17.67	$0.00	$88.65
DIVER TENDER *PILE DRIVER LOCAL 56 (ZONE 1)*	08/01/2012	$54.88	$9.80	$17.67	$0.00	$82.35
	08/01/2013	$56.98	$9.80	$17.67	$0.00	$84.45
	08/01/2014	$59.08	$9.80	$17.67	$0.00	$86.55
	08/01/2015	$61.18	$9.80	$17.67	$0.00	$88.65

Classification	Effective Date	Base Wage	Health	Pension	Supplemental Unemployment	Total Rate
DIVER TENDER (EFFLUENT) *PILE DRIVER LOCAL 56 (ZONE 1)*	08/01/2012	$58.80	$9.80	$17.67	$0.00	$86.27
	08/01/2013	$61.05	$9.80	$17.67	$0.00	$88.52
	08/01/2014	$63.30	$9.80	$17.67	$0.00	$90.77
	08/01/2015	$65.55	$9.80	$17.67	$0.00	$93.02
DIVER/SLURRY (EFFLUENT) *PILE DRIVER LOCAL 56 (ZONE 1)*	08/01/2012	$82.32	$9.80	$17.67	$0.00	$109.79
	08/01/2013	$85.47	$9.80	$17.67	$0.00	$112.94
	08/01/2014	$88.62	$9.80	$17.67	$0.00	$116.09
	08/01/2015	$91.77	$9.80	$17.67	$0.00	$119.24
DRAWBRIDGE OPERATOR (Construction) *ELECTRICIANS LOCAL 103*	03/01/2013	$43.52	$13.00	$14.16	$0.00	$70.68
	09/01/2013	$44.20	$13.00	$14.18	$0.00	$71.38
	03/01/2014	$44.92	$13.00	$14.20	$0.00	$72.12
	09/01/2014	$45.60	$13.00	$14.22	$0.00	$72.82
	03/01/2015	$46.32	$13.00	$14.24	$0.00	$73.56
	09/01/2015	$47.27	$13.00	$14.27	$0.00	$74.54
	03/01/2016	$48.23	$13.00	$14.30	$0.00	$75.53
For apprentice rates see "Apprentice- ELECTRICIAN"						
ELECTRICIAN *ELECTRICIANS LOCAL 103*	03/01/2013	$43.52	$13.00	$14.16	$0.00	$70.68
	09/01/2013	$44.20	$13.00	$14.18	$0.00	$71.38
	03/01/2014	$44.92	$13.00	$14.20	$0.00	$72.12
	09/01/2014	$45.60	$13.00	$14.22	$0.00	$72.82
	03/01/2015	$46.32	$13.00	$14.24	$0.00	$73.56
	09/01/2015	$47.27	$13.00	$14.27	$0.00	$74.54
	03/01/2016	$48.23	$13.00	$14.30	$0.00	$75.53

Classification	Effective Date	Base Wage	Health	Pension	Supplemental Unemployment	Total Rate

Apprentice - *ELECTRICIAN - Local 103*

Effective Date - 03/01/2013

Step	percent	Apprentice Base Wage	Health	Pension	Supplemental Unemployment	Total Rate
1	40	$17.41	$13.00	$0.52	$0.00	$30.93
2	40	$17.41	$13.00	$0.52	$0.00	$30.93
3	45	$19.58	$13.00	$10.53	$0.00	$43.11
4	45	$19.58	$13.00	$10.53	$0.00	$43.11
5	50	$21.76	$13.00	$10.85	$0.00	$45.61
6	55	$23.94	$13.00	$11.19	$0.00	$48.13
7	60	$26.11	$13.00	$11.51	$0.00	$50.62
8	65	$28.29	$13.00	$11.85	$0.00	$53.14
9	70	$30.46	$13.00	$12.17	$0.00	$55.63
10	75	$32.64	$13.00	$12.51	$0.00	$58.15

Effective Date - 09/01/2013

Step	percent	Apprentice Base Wage	Health	Pension	Supplemental Unemployment	Total Rate
1	40	$17.68	$13.00	$0.53	$0.00	$31.21
2	40	$17.68	$13.00	$0.53	$0.00	$31.21
3	45	$19.89	$13.00	$10.54	$0.00	$43.43
4	45	$19.89	$13.00	$10.54	$0.00	$43.43
5	50	$22.10	$13.00	$10.86	$0.00	$45.96
6	55	$24.31	$13.00	$11.20	$0.00	$48.51
7	60	$26.52	$13.00	$11.53	$0.00	$51.05
8	65	$28.73	$13.00	$11.86	$0.00	$53.59
9	70	$30.94	$13.00	$12.19	$0.00	$56.13
10	75	$33.15	$13.00	$12.53	$0.00	$58.68

Notes: :

App Prior 1/1/03; 30/35/40/45/50/55/65/70/75/80

Apprentice to Journeyworker Ratio:2:3***

ELEVATOR CONSTRUCTOR *ELEVATOR CONSTRUCTORS LOCAL 4*	01/01/2012	$52.45	$8.78	$6.96	$0.00	$68.19

Classification	Effective Date	Base Wage	Health	Pension	Supplemental Unemployment	Total Rate

Apprentice - *ELEVATOR CONSTRUCTOR - Local 4*

Effective Date - 01/01/2012

Step	percent	Apprentice Base Wage	Health	Pension	Supplemental Unemployment	Total Rate
1	50	$26.23	$8.78	$0.00	$0.00	$35.01
2	55	$28.85	$8.78	$6.96	$0.00	$44.59
3	65	$34.09	$8.78	$6.96	$0.00	$49.83
4	70	$36.72	$8.78	$6.96	$0.00	$52.46
5	80	$41.96	$8.78	$6.96	$0.00	$57.70

Notes:

Steps 1-2 are 6 mos.; Steps 3-5 are 1 year

Apprentice to Journeyworker Ratio:1:1

ELEVATOR CONSTRUCTOR HELPER *ELEVATOR CONSTRUCTORS LOCAL 4*	01/01/2012	$38.59	$8.78	$6.96	$0.00	$54.33
FENCE & GUARD RAIL ERECTOR *LABORERS - ZONE 2*	06/01/2013	$30.10	$7.10	$11.80	$0.00	$49.00
	12/01/2013	$30.60	$7.10	$11.80	$0.00	$49.50
	06/01/2014	$31.10	$7.10	$11.80	$0.00	$50.00
	12/01/2014	$31.60	$7.10	$11.80	$0.00	$50.50
	06/01/2015	$32.10	$7.10	$11.80	$0.00	$51.00
	12/01/2015	$32.60	$7.10	$11.80	$0.00	$51.50
	06/01/2016	$33.10	$7.10	$11.80	$0.00	$52.00
	12/01/2016	$33.85	$7.10	$11.80	$0.00	$52.75
For apprentice rates see "Apprentice- LABORER"						
FIELD ENG.INST.PERSON-BLDG,SITE,HVY/HWY *OPERATING ENGINEERS LOCAL 4*	05/01/2013	$38.50	$10.00	$13.02	$0.00	$61.52
	11/01/2013	$39.26	$10.00	$13.02	$0.00	$62.28
	05/01/2014	$40.03	$10.00	$13.02	$0.00	$63.05
For apprentice rates see "Apprentice- OPERATING ENGINEERS"						
FIELD ENG.PARTY CHIEF-BLDG,SITE,HVY/HWY *OPERATING ENGINEERS LOCAL 4*	05/01/2013	$39.91	$10.00	$13.02	$0.00	$62.93
	11/01/2013	$40.68	$10.00	$13.02	$0.00	$63.70
	05/01/2014	$41.45	$10.00	$13.02	$0.00	$64.47
For apprentice rates see "Apprentice- OPERATING ENGINEERS"						
FIELD ENG.ROD PERSON-BLDG,SITE,HVY/HWY *OPERATING ENGINEERS LOCAL 4*	05/01/2013	$21.17	$10.00	$13.02	$0.00	$44.19
	11/01/2013	$21.63	$10.00	$13.02	$0.00	$44.65
	05/01/2014	$22.08	$10.00	$13.02	$0.00	$45.10
For apprentice rates see "Apprentice- OPERATING ENGINEERS"						
FIRE ALARM INSTALLER *ELECTRICIANS LOCAL 103*	03/01/2013	$43.52	$13.00	$14.16	$0.00	$70.68
	09/01/2013	$44.20	$13.00	$14.18	$0.00	$71.38
	03/01/2014	$44.92	$13.00	$14.20	$0.00	$72.12
	09/01/2014	$45.60	$13.00	$14.22	$0.00	$72.82
	03/01/2015	$46.32	$13.00	$14.24	$0.00	$73.56
	09/01/2015	$47.27	$13.00	$14.27	$0.00	$74.54
	03/01/2016	$48.23	$13.00	$14.30	$0.00	$75.53
For apprentice rates see "Apprentice- ELECTRICIAN"						

Classification	Effective Date	Base Wage	Health	Pension	Supplemental Unemployment	Total Rate
FIRE ALARM REPAIR / MAINTENANCE / COMMISSIONING *ELECTRICIANS LOCAL 103*	03/01/2013	$32.64	$13.00	$12.51	$0.00	$58.15
	09/01/2013	$33.15	$13.00	$12.52	$0.00	$58.67
	03/01/2014	$33.69	$13.00	$12.54	$0.00	$59.23
	09/01/2014	$34.20	$13.00	$12.56	$0.00	$59.76
	03/01/2015	$34.74	$13.00	$12.57	$0.00	$60.31
	09/01/2015	$35.45	$13.00	$12.59	$0.00	$61.04
	03/01/2016	$36.17	$13.00	$12.62	$0.00	$61.79
For apprentice rates see "Apprentice- TELECOMMUNICATIONS TECHNICIAN"						
FIREMAN (ASST. ENGINEER) *OPERATING ENGINEERS LOCAL 4*	06/01/2013	$33.73	$10.00	$13.55	$0.00	$57.28
	12/01/2013	$34.39	$10.00	$13.55	$0.00	$57.94
For apprentice rates see "Apprentice- OPERATING ENGINEERS"						
FLAGGER & SIGNALER *LABORERS - ZONE 2*	06/01/2013	$20.50	$7.10	$11.80	$0.00	$39.40
	12/01/2013	$20.50	$7.10	$11.80	$0.00	$39.40
	06/01/2014	$20.50	$7.10	$11.80	$0.00	$39.40
	12/01/2014	$20.50	$7.10	$11.80	$0.00	$39.40
	06/01/2015	$20.50	$7.10	$11.80	$0.00	$39.40
	12/01/2015	$20.50	$7.10	$11.80	$0.00	$39.40
	06/01/2016	$20.50	$7.10	$11.80	$0.00	$39.40
	12/01/2016	$20.50	$7.10	$11.80	$0.00	$39.40
For apprentice rates see "Apprentice- LABORER"						
FLOORCOVERER *FLOORCOVERERS LOCAL 2168 ZONE I*	03/01/2013	$38.61	$9.80	$16.71	$0.00	$65.12
	09/01/2013	$38.61	$9.80	$16.71	$0.00	$65.12
	03/01/2014	$38.61	$9.80	$16.71	$0.00	$65.12

Classification	Effective Date	Base Wage	Health	Pension	Supplemental Unemployment	Total Rate

Apprentice - *FLOORCOVERER - Local 2168 Zone I*

Effective Date - 03/01/2013

Step	percent	Apprentice Base Wage	Health	Pension	Supplemental Unemployment	Total Rate
1	50	$19.31	$9.80	$1.79	$0.00	$30.90
2	55	$21.24	$9.80	$1.79	$0.00	$32.83
3	60	$23.17	$9.80	$11.34	$0.00	$44.31
4	65	$25.10	$9.80	$11.34	$0.00	$46.24
5	70	$27.03	$9.80	$13.13	$0.00	$49.96
6	75	$28.96	$9.80	$13.13	$0.00	$51.89
7	80	$30.89	$9.80	$14.92	$0.00	$55.61
8	85	$32.82	$9.80	$14.92	$0.00	$57.54

Effective Date - 09/01/2013

Step	percent	Apprentice Base Wage	Health	Pension	Supplemental Unemployment	Total Rate
1	50	$19.31	$9.80	$1.79	$0.00	$30.90
2	55	$21.24	$9.80	$1.79	$0.00	$32.83
3	60	$23.17	$9.80	$11.34	$0.00	$44.31
4	65	$25.10	$9.80	$11.34	$0.00	$46.24
5	70	$27.03	$9.80	$13.13	$0.00	$49.96
6	75	$28.96	$9.80	$13.13	$0.00	$51.89
7	80	$30.89	$9.80	$14.92	$0.00	$55.61
8	85	$32.82	$9.80	$14.92	$0.00	$57.54

Notes:

Steps are 750 hrs.

Apprentice to Journeyworker Ratio:1:1

FORK LIFT/CHERRY PICKER *OPERATING ENGINEERS LOCAL 4*	06/01/2013	$40.34	$10.00	$13.55	$0.00	$63.89
	12/01/2013	$41.12	$10.00	$13.55	$0.00	$64.67
For apprentice rates see "Apprentice- OPERATING ENGINEERS"						
GENERATOR/LIGHTING PLANT/HEATERS *OPERATING ENGINEERS LOCAL 4*	06/01/2013	$28.19	$10.00	$13.55	$0.00	$51.74
	12/01/2013	$28.74	$10.00	$13.55	$0.00	$52.29
For apprentice rates see "Apprentice- OPERATING ENGINEERS"						
GLAZIER (GLASS PLANK/AIR BARRIER/INTERIOR SYSTEMS) *GLAZIERS LOCAL 35 (ZONE 2)*	01/01/2013	$35.51	$7.80	$14.60	$0.00	$57.91

Classification	Effective Date	Base Wage	Health	Pension	Supplemental Unemployment	Total Rate

Apprentice - *GLAZIER - Local 35 Zone 2*

Effective Date - 01/01/2013

Step	percent	Apprentice Base Wage	Health	Pension	Supplemental Unemployment	Total Rate
1	50	$17.76	$7.80	$0.00	$0.00	$25.56
2	55	$19.53	$7.80	$3.25	$0.00	$30.58
3	60	$21.31	$7.80	$3.54	$0.00	$32.65
4	65	$23.08	$7.80	$3.84	$0.00	$34.72
5	70	$24.86	$7.80	$12.83	$0.00	$45.49
6	75	$26.63	$7.80	$13.13	$0.00	$47.56
7	80	$28.41	$7.80	$13.42	$0.00	$49.63
8	90	$31.96	$7.80	$14.01	$0.00	$53.77

Notes:

Steps are 750 hrs.

Apprentice to Journeyworker Ratio:1:1

HOISTING ENGINEER/CRANES/GRADALLS *OPERATING ENGINEERS LOCAL 4*	06/01/2013	$40.34	$10.00	$13.55	$0.00	$63.89
	12/01/2013	$41.12	$10.00	$13.55	$0.00	$64.67

Classification	Effective Date	Base Wage	Health	Pension	Supplemental Unemployment	Total Rate

Apprentice - *OPERATING ENGINEERS - Local 4*

Effective Date - 06/01/2013

Step	percent	Apprentice Base Wage	Health	Pension	Supplemental Unemployment	Total Rate
1	55	$22.19	$10.00	$0.00	$0.00	$32.19
2	60	$24.20	$10.00	$13.55	$0.00	$47.75
3	65	$26.22	$10.00	$13.55	$0.00	$49.77
4	70	$28.24	$10.00	$13.55	$0.00	$51.79
5	75	$30.26	$10.00	$13.55	$0.00	$53.81
6	80	$32.27	$10.00	$13.55	$0.00	$55.82
7	85	$34.29	$10.00	$13.55	$0.00	$57.84
8	90	$36.31	$10.00	$13.55	$0.00	$59.86

Effective Date - 12/01/2013

Step	percent	Apprentice Base Wage	Health	Pension	Supplemental Unemployment	Total Rate
1	55	$22.62	$10.00	$0.00	$0.00	$32.62
2	60	$24.67	$10.00	$13.55	$0.00	$48.22
3	65	$26.73	$10.00	$13.55	$0.00	$50.28
4	70	$28.78	$10.00	$13.55	$0.00	$52.33
5	75	$30.84	$10.00	$13.55	$0.00	$54.39
6	80	$32.90	$10.00	$13.55	$0.00	$56.45
7	85	$34.95	$10.00	$13.55	$0.00	$58.50
8	90	$37.01	$10.00	$13.55	$0.00	$60.56

Notes:

Apprentice to Journeyworker Ratio:1:6

HVAC (DUCTWORK) *SHEETMETAL WORKERS LOCAL 17 - A*	02/01/2013	$42.32	$9.82	$18.24	$2.11	$72.49
For apprentice rates see "Apprentice- SHEET METAL WORKER"						
HVAC (ELECTRICAL CONTROLS) *ELECTRICIANS LOCAL 103*	03/01/2013	$43.52	$13.00	$14.16	$0.00	$70.68
	09/01/2013	$44.20	$13.00	$14.18	$0.00	$71.38
	03/01/2014	$44.92	$13.00	$14.20	$0.00	$72.12
	09/01/2014	$45.60	$13.00	$14.22	$0.00	$72.82
	03/01/2015	$46.32	$13.00	$14.24	$0.00	$73.56
	09/01/2015	$47.27	$13.00	$14.27	$0.00	$74.54
	03/01/2016	$48.23	$13.00	$14.30	$0.00	$75.53
For apprentice rates see "Apprentice- ELECTRICIAN"						
HVAC (TESTING AND BALANCING - AIR) *SHEETMETAL WORKERS LOCAL 17 - A*	02/01/2013	$42.32	$9.82	$18.24	$2.11	$72.49
For apprentice rates see "Apprentice- SHEET METAL WORKER"						
HVAC (TESTING AND BALANCING -WATER) *PIPEFITTERS LOCAL 537*	03/01/2013	$49.34	$8.75	$14.39	$0.00	$72.48
For apprentice rates see "Apprentice- PIPEFITTER" or "PLUMBER/PIPEFITTER"						
HVAC MECHANIC *PIPEFITTERS LOCAL 537*	03/01/2013	$49.34	$8.75	$14.39	$0.00	$72.48

Classification	Effective Date	Base Wage	Health	Pension	Supplemental Unemployment	Total Rate
For apprentice rates see "Apprentice- PIPEFITTER" or "PLUMBER/PIPEFITTER"						
HYDRAULIC DRILLS *LABORERS - ZONE 2*	06/01/2013	$30.60	$7.10	$11.80	$0.00	$49.50
	12/01/2013	$31.10	$7.10	$11.80	$0.00	$50.00
	06/01/2014	$31.60	$7.10	$11.80	$0.00	$50.50
	12/01/2014	$32.10	$7.10	$11.80	$0.00	$51.00
	06/01/2015	$32.60	$7.10	$11.80	$0.00	$51.50
	12/01/2015	$33.10	$7.10	$11.80	$0.00	$52.00
	06/01/2016	$33.60	$7.10	$11.80	$0.00	$52.50
	12/01/2016	$34.35	$7.10	$11.80	$0.00	$53.25
For apprentice rates see "Apprentice- LABORER"						
INSULATOR (PIPES & TANKS) *HEAT & FROST INSULATORS LOCAL 6 (BOSTON)*	09/01/2012	$41.46	$10.65	$11.50	$0.00	$63.61
	09/01/2013	$43.06	$10.65	$11.50	$0.00	$65.21
	09/01/2014	$45.06	$10.65	$11.50	$0.00	$67.21

Apprentice - *ASBESTOS INSULATOR (Pipes & Tanks) - Local 6 Boston*

Effective Date - 09/01/2012

Step	percent	Apprentice Base Wage	Health	Pension	Supplemental Unemployment	Total Rate
1	50	$20.73	$10.65	$8.60	$0.00	$39.98
2	60	$24.88	$10.65	$9.18	$0.00	$44.71
3	70	$29.02	$10.65	$9.76	$0.00	$49.43
4	80	$33.17	$10.65	$10.34	$0.00	$54.16

Effective Date - 09/01/2013

Step	percent	Apprentice Base Wage	Health	Pension	Supplemental Unemployment	Total Rate
1	50	$21.53	$10.65	$8.60	$0.00	$40.78
2	60	$25.84	$10.65	$9.18	$0.00	$45.67
3	70	$30.14	$10.65	$9.76	$0.00	$50.55
4	80	$34.45	$10.65	$10.34	$0.00	$55.44

Notes:

Steps are 1 year

Apprentice to Journeyworker Ratio:1:4

IRONWORKER/WELDER *IRONWORKERS LOCAL 7 (BOSTON AREA)*	03/16/2013	$40.23	$7.70	$18.35	$0.00	$66.28

Classification	Effective Date	Base Wage	Health	Pension	Supplemental Unemployment	Total Rate

Apprentice - *IRONWORKER - Local 7 Boston*

Effective Date - 03/16/2013

Step	percent	Apprentice Base Wage	Health	Pension	Supplemental Unemployment	Total Rate
1	60	$24.14	$7.70	$18.35	$0.00	$50.19
2	70	$28.16	$7.70	$18.35	$0.00	$54.21
3	75	$30.17	$7.70	$18.35	$0.00	$56.22
4	80	$32.18	$7.70	$18.35	$0.00	$58.23
5	85	$34.20	$7.70	$18.35	$0.00	$60.25
6	90	$36.21	$7.70	$18.35	$0.00	$62.26

Notes:

** Structural 1:6; Ornamental 1:4

Apprentice to Journeyworker Ratio:**

JACKHAMMER & PAVING BREAKER OPERATOR *LABORERS - ZONE 2*	06/01/2013	$30.10	$7.10	$11.80	$0.00	$49.00
	12/01/2013	$30.60	$7.10	$11.80	$0.00	$49.50
	06/01/2014	$31.10	$7.10	$11.80	$0.00	$50.00
	12/01/2014	$31.60	$7.10	$11.80	$0.00	$50.50
	06/01/2015	$32.10	$7.10	$11.80	$0.00	$51.00
	12/01/2015	$32.60	$7.10	$11.80	$0.00	$51.50
	06/01/2016	$33.10	$7.10	$11.80	$0.00	$52.00
	12/01/2016	$33.85	$7.10	$11.80	$0.00	$52.75

For apprentice rates see "Apprentice- LABORER"

LABORER *LABORERS - ZONE 2*	06/01/2013	$29.85	$7.10	$11.80	$0.00	$48.75
	12/01/2013	$30.35	$7.10	$11.80	$0.00	$49.25
	06/01/2014	$30.85	$7.10	$11.80	$0.00	$49.75
	12/01/2014	$31.35	$7.10	$11.80	$0.00	$50.25
	06/01/2015	$31.85	$7.10	$11.80	$0.00	$50.75
	12/01/2015	$32.35	$7.10	$11.80	$0.00	$51.25
	06/01/2016	$32.85	$7.10	$11.80	$0.00	$51.75
	12/01/2016	$33.60	$7.10	$11.80	$0.00	$52.50

Classification	Effective Date	Base Wage	Health	Pension	Supplemental Unemployment	Total Rate

Apprentice - *LABORER - Zone 2*

Effective Date - 06/01/2013

Step	percent	Apprentice Base Wage	Health	Pension	Supplemental Unemployment	Total Rate
1	60	$17.91	$7.10	$11.80	$0.00	$36.81
2	70	$20.90	$7.10	$11.80	$0.00	$39.80
3	80	$23.88	$7.10	$11.80	$0.00	$42.78
4	90	$26.87	$7.10	$11.80	$0.00	$45.77

Effective Date - 12/01/2013

Step	percent	Apprentice Base Wage	Health	Pension	Supplemental Unemployment	Total Rate
1	60	$18.21	$7.10	$11.80	$0.00	$37.11
2	70	$21.25	$7.10	$11.80	$0.00	$40.15
3	80	$24.28	$7.10	$11.80	$0.00	$43.18
4	90	$27.32	$7.10	$11.80	$0.00	$46.22

Notes:

Apprentice to Journeyworker Ratio:1:5

LABORER: CARPENTER TENDER *LABORERS - ZONE 2*	06/01/2013	$29.85	$7.10	$11.80	$0.00	$48.75
	12/01/2013	$30.35	$7.10	$11.80	$0.00	$49.25
	06/01/2014	$30.85	$7.10	$11.80	$0.00	$49.75
	12/01/2014	$31.35	$7.10	$11.80	$0.00	$50.25
	06/01/2015	$31.85	$7.10	$11.80	$0.00	$50.75
	12/01/2015	$32.35	$7.10	$11.80	$0.00	$51.25
	06/01/2016	$32.85	$7.10	$11.80	$0.00	$51.75
	12/01/2016	$33.60	$7.10	$11.80	$0.00	$52.50
For apprentice rates see "Apprentice- LABORER"						
LABORER: CEMENT FINISHER TENDER *LABORERS - ZONE 2*	06/01/2013	$29.85	$7.10	$11.80	$0.00	$48.75
	12/01/2013	$30.35	$7.10	$11.80	$0.00	$49.25
	06/01/2014	$30.85	$7.10	$11.80	$0.00	$49.75
	12/01/2014	$31.35	$7.10	$11.80	$0.00	$50.25
	06/01/2015	$31.85	$7.10	$11.80	$0.00	$50.75
	12/01/2015	$32.35	$7.10	$11.80	$0.00	$51.25
	06/01/2016	$32.85	$7.10	$11.80	$0.00	$51.75
	12/01/2016	$33.60	$7.10	$11.80	$0.00	$52.50
For apprentice rates see "Apprentice- LABORER"						
LABORER: HAZARDOUS WASTE/ASBESTOS REMOVER *LABORERS - ZONE 2*	12/01/2011	$29.35	$7.10	$11.55	$0.00	$48.00
For apprentice rates see "Apprentice- LABORER"						

Classification	Effective Date	Base Wage	Health	Pension	Supplemental Unemployment	Total Rate
LABORER: MASON TENDER *LABORERS - ZONE 2*	06/01/2013	$30.10	$7.10	$11.80	$0.00	$49.00
	12/01/2013	$30.60	$7.10	$11.80	$0.00	$49.50
	06/01/2014	$31.10	$7.10	$11.80	$0.00	$50.00
	12/01/2014	$31.60	$7.10	$11.80	$0.00	$50.50
	06/01/2015	$32.10	$7.10	$11.80	$0.00	$51.00
	12/01/2015	$32.60	$7.10	$11.80	$0.00	$51.50
	06/01/2016	$33.10	$7.10	$11.80	$0.00	$52.00
	12/01/2016	$33.85	$7.10	$11.80	$0.00	$52.75
For apprentice rates see "Apprentice- LABORER"						
LABORER: MULTI-TRADE TENDER *LABORERS - ZONE 2*	06/01/2013	$29.85	$7.10	$11.80	$0.00	$48.75
	12/01/2013	$30.35	$7.10	$11.80	$0.00	$49.25
	06/01/2014	$30.85	$7.10	$11.80	$0.00	$49.75
	12/01/2014	$31.35	$7.10	$11.80	$0.00	$50.25
	06/01/2015	$31.85	$7.10	$11.80	$0.00	$50.75
	12/01/2015	$32.35	$7.10	$11.80	$0.00	$51.25
	06/01/2016	$32.85	$7.10	$11.80	$0.00	$51.75
	12/01/2016	$33.60	$7.10	$11.80	$0.00	$52.50
For apprentice rates see "Apprentice- LABORER"						
LABORER: TREE REMOVER *LABORERS - ZONE 2*	06/01/2013	$29.85	$7.10	$11.80	$0.00	$48.75
	12/01/2013	$30.35	$7.10	$11.80	$0.00	$49.25
	06/01/2014	$30.85	$7.10	$11.80	$0.00	$49.75
	12/01/2014	$31.35	$7.10	$11.80	$0.00	$50.25
	06/01/2015	$31.85	$7.10	$11.80	$0.00	$50.75
	12/01/2015	$32.35	$7.10	$11.80	$0.00	$51.25
	06/01/2016	$32.85	$7.10	$11.80	$0.00	$51.75
	12/01/2016	$33.60	$7.10	$11.80	$0.00	$52.50
This classification applies to the wholesale removal of standing trees including all associated trimming of branches and limbs, and applies to the removal of branches at locations not on or around utility lines. For apprentice rates see "Apprentice- LABORER"						
LASER BEAM OPERATOR *LABORERS - ZONE 2*	06/01/2013	$30.10	$7.10	$11.80	$0.00	$49.00
	12/01/2013	$30.60	$7.10	$11.80	$0.00	$49.50
	06/01/2014	$31.10	$7.10	$11.80	$0.00	$50.00
	12/01/2014	$31.60	$7.10	$11.80	$0.00	$50.50
	06/01/2015	$32.10	$7.10	$11.80	$0.00	$51.00
	12/01/2015	$32.60	$7.10	$11.80	$0.00	$51.50
	06/01/2016	$33.10	$7.10	$11.80	$0.00	$52.00
	12/01/2016	$33.85	$7.10	$11.80	$0.00	$52.75
For apprentice rates see "Apprentice- LABORER"						
MARBLE & TILE FINISHERS *BRICKLAYERS LOCAL 3 - MARBLE & TILE*	02/01/2013	$36.20	$10.18	$16.51	$0.00	$62.89
	08/01/2013	$36.91	$10.18	$16.58	$0.00	$63.67
	02/01/2014	$37.36	$10.18	$16.58	$0.00	$64.12
	08/01/2014	$38.07	$10.18	$16.65	$0.00	$64.90
	02/01/2015	$38.52	$10.18	$16.65	$0.00	$65.35
	08/01/2015	$39.23	$10.18	$16.72	$0.00	$66.13
	02/01/2016	$39.68	$10.18	$16.72	$0.00	$66.58
	08/01/2016	$40.38	$10.18	$16.80	$0.00	$67.36
	02/01/2017	$40.84	$10.18	$16.80	$0.00	$67.82

Classification	Effective Date	Base Wage	Health	Pension	Supplemental Unemployment	Total Rate

Apprentice - *MARBLE & TILE FINISHER - Local 3 Marble & Tile*

Effective Date - 02/01/2013

Step	percent	Apprentice Base Wage	Health	Pension	Supplemental Unemployment	Total Rate
1	50	$18.10	$10.18	$16.51	$0.00	$44.79
2	60	$21.72	$10.18	$16.51	$0.00	$48.41
3	70	$25.34	$10.18	$16.51	$0.00	$52.03
4	80	$28.96	$10.18	$16.51	$0.00	$55.65
5	90	$32.58	$10.18	$16.51	$0.00	$59.27

Effective Date - 08/01/2013

Step	percent	Apprentice Base Wage	Health	Pension	Supplemental Unemployment	Total Rate
1	50	$18.46	$10.18	$16.58	$0.00	$45.22
2	60	$22.15	$10.18	$16.58	$0.00	$48.91
3	70	$25.84	$10.18	$16.58	$0.00	$52.60
4	80	$29.53	$10.18	$16.58	$0.00	$56.29
5	90	$33.22	$10.18	$16.58	$0.00	$59.98

Notes:

Apprentice to Journeyworker Ratio:1:3

MARBLE MASONS,TILELAYERS & TERRAZZO MECH *BRICKLAYERS LOCAL 3 - MARBLE & TILE*	02/01/2013	$47.45	$10.18	$17.83	$0.00	$75.46
	08/01/2013	$48.35	$10.18	$17.90	$0.00	$76.43
	02/01/2014	$48.91	$10.18	$17.90	$0.00	$76.99
	08/01/2014	$49.81	$10.18	$17.97	$0.00	$77.96
	02/01/2015	$50.37	$10.18	$17.97	$0.00	$78.52
	08/01/2015	$51.27	$10.18	$18.04	$0.00	$79.49
	02/01/2016	$51.84	$10.18	$18.04	$0.00	$80.06
	08/01/2016	$52.74	$10.18	$18.12	$0.00	$81.04
	02/01/2017	$53.31	$10.18	$18.12	$0.00	$81.61

Classification	Effective Date	Base Wage	Health	Pension	Supplemental Unemployment	Total Rate

Apprentice - *MARBLE-TILE-TERRAZZO MECHANIC - Local 3 Marble & Tile*

Effective Date - 02/01/2013

Step	percent	Apprentice Base Wage	Health	Pension	Supplemental Unemployment	Total Rate
1	50	$23.73	$10.18	$17.83	$0.00	$51.74
2	60	$28.47	$10.18	$17.83	$0.00	$56.48
3	70	$33.22	$10.18	$17.83	$0.00	$61.23
4	80	$37.96	$10.18	$17.83	$0.00	$65.97
5	90	$42.71	$10.18	$17.83	$0.00	$70.72

Effective Date - 08/01/2013

Step	percent	Apprentice Base Wage	Health	Pension	Supplemental Unemployment	Total Rate
1	50	$24.18	$10.18	$17.90	$0.00	$52.26
2	60	$29.01	$10.18	$17.90	$0.00	$57.09
3	70	$33.85	$10.18	$17.90	$0.00	$61.93
4	80	$38.68	$10.18	$17.90	$0.00	$66.76
5	90	$43.52	$10.18	$17.90	$0.00	$71.60

Notes:

Apprentice to Journeyworker Ratio:1:5

MECH. SWEEPER OPERATOR (ON CONST. SITES) *OPERATING ENGINEERS LOCAL 4*	06/01/2013	$39.96	$10.00	$13.55	$0.00	$63.51
	12/01/2013	$40.74	$10.00	$13.55	$0.00	$64.29
For apprentice rates see "Apprentice- OPERATING ENGINEERS"						
MECHANICS MAINTENANCE *OPERATING ENGINEERS LOCAL 4*	06/01/2013	$39.96	$10.00	$13.55	$0.00	$63.51
	12/01/2013	$40.74	$10.00	$13.55	$0.00	$64.29
For apprentice rates see "Apprentice- OPERATING ENGINEERS"						
MILLWRIGHT (Zone 1) *MILLWRIGHTS LOCAL 1121 - Zone 1*	04/01/2013	$34.68	$9.80	$15.76	$0.00	$60.24
	10/01/2013	$35.45	$9.80	$15.76	$0.00	$61.01
	04/01/2014	$36.23	$9.80	$15.76	$0.00	$61.79
	10/01/2014	$37.18	$9.80	$15.76	$0.00	$62.74
	04/01/2015	$38.14	$9.80	$15.76	$0.00	$63.70

Classification	Effective Date	Base Wage	Health	Pension	Supplemental Unemployment	Total Rate

Apprentice - *MILLWRIGHT - Local 1121 Zone 1*

Effective Date - 04/01/2013

Step	percent	Apprentice Base Wage	Health	Pension	Supplemental Unemployment	Total Rate
1	55	$19.07	$9.80	$4.32	$0.00	$33.19
2	65	$22.54	$9.80	$13.01	$0.00	$45.35
3	75	$26.01	$9.80	$13.80	$0.00	$49.61
4	85	$29.48	$9.80	$14.58	$0.00	$53.86

Effective Date - 10/01/2013

Step	percent	Apprentice Base Wage	Health	Pension	Supplemental Unemployment	Total Rate
1	55	$19.50	$9.80	$4.32	$0.00	$33.62
2	65	$23.04	$9.80	$13.01	$0.00	$45.85
3	75	$26.59	$9.80	$13.80	$0.00	$50.19
4	85	$30.13	$9.80	$14.58	$0.00	$54.51

Notes:

Steps are 2,000 hours

Apprentice to Journeyworker Ratio:1:5

MORTAR MIXER *LABORERS - ZONE 2*	06/01/2013	$30.10	$7.10	$11.80	$0.00	$49.00
	12/01/2013	$30.60	$7.10	$11.80	$0.00	$49.50
	06/01/2014	$31.10	$7.10	$11.80	$0.00	$50.00
	12/01/2014	$31.60	$7.10	$11.80	$0.00	$50.50
	06/01/2015	$32.10	$7.10	$11.80	$0.00	$51.00
	12/01/2015	$32.60	$7.10	$11.80	$0.00	$51.50
	06/01/2016	$33.10	$7.10	$11.80	$0.00	$52.00
	12/01/2016	$33.85	$7.10	$11.80	$0.00	$52.75
For apprentice rates see "Apprentice- LABORER"						
OILER (OTHER THAN TRUCK CRANES,GRADALLS) *OPERATING ENGINEERS LOCAL 4*	06/01/2013	$21.17	$10.00	$13.55	$0.00	$44.72
	12/01/2013	$21.59	$10.00	$13.55	$0.00	$45.14
For apprentice rates see "Apprentice- OPERATING ENGINEERS"						
OILER (TRUCK CRANES, GRADALLS) *OPERATING ENGINEERS LOCAL 4*	06/01/2013	$24.57	$10.00	$13.55	$0.00	$48.12
	12/01/2013	$25.06	$10.00	$13.55	$0.00	$48.61
For apprentice rates see "Apprentice- OPERATING ENGINEERS"						
OTHER POWER DRIVEN EQUIPMENT - CLASS II *OPERATING ENGINEERS LOCAL 4*	06/01/2013	$39.96	$10.00	$13.55	$0.00	$63.51
	12/01/2013	$40.74	$10.00	$13.55	$0.00	$64.29
For apprentice rates see "Apprentice- OPERATING ENGINEERS"						
PAINTER (BRIDGES/TANKS) *PAINTERS LOCAL 35 - ZONE 2*	01/01/2013	$45.01	$7.80	$15.60	$0.00	$68.41

Classification	Effective Date	Base Wage	Health	Pension	Supplemental Unemployment	Total Rate

Apprentice - *PAINTER Local 35 - BRIDGES/TANKS*

Effective Date - 01/01/2013

Step	percent	Apprentice Base Wage	Health	Pension	Supplemental Unemployment	Total Rate
1	50	$22.51	$7.80	$0.00	$0.00	$30.31
2	55	$24.76	$7.80	$3.52	$0.00	$36.08
3	60	$27.01	$7.80	$3.84	$0.00	$38.65
4	65	$29.26	$7.80	$4.16	$0.00	$41.22
5	70	$31.51	$7.80	$13.68	$0.00	$52.99
6	75	$33.76	$7.80	$14.00	$0.00	$55.56
7	80	$36.01	$7.80	$14.32	$0.00	$58.13
8	90	$40.51	$7.80	$14.96	$0.00	$63.27

Notes:

Steps are 750 hrs.

Apprentice to Journeyworker Ratio:1:1

PAINTER (SPRAY OR SANDBLAST, NEW) *	01/01/2013	$35.91	$7.80	$15.60	$0.00	$59.31

* If 30% or more of surfaces to be painted are new construction, NEW paint rate shall be used.*PAINTERS LOCAL 35 - ZONE 2*

Apprentice - *PAINTER Local 35 Zone 2 - Spray/Sandblast - New*

Effective Date - 01/01/2013

Step	percent	Apprentice Base Wage	Health	Pension	Supplemental Unemployment	Total Rate
1	50	$17.96	$7.80	$0.00	$0.00	$25.76
2	55	$19.75	$7.80	$3.52	$0.00	$31.07
3	60	$21.55	$7.80	$3.84	$0.00	$33.19
4	65	$23.34	$7.80	$4.16	$0.00	$35.30
5	70	$25.14	$7.80	$13.68	$0.00	$46.62
6	75	$26.93	$7.80	$14.00	$0.00	$48.73
7	80	$28.73	$7.80	$14.32	$0.00	$50.85
8	90	$32.32	$7.80	$14.96	$0.00	$55.08

Notes:

Apprentice to Journeyworker Ratio:1:1

PAINTER (SPRAY OR SANDBLAST, REPAINT)	01/01/2013	$33.97	$7.80	$15.60	$0.00	$57.37

PAINTERS LOCAL 35 - ZONE 2

Classification	Effective Date	Base Wage	Health	Pension	Supplemental Unemployment	Total Rate

Apprentice - *PAINTER Local 35 Zone 2 - Spray/Sandblast - Repaint*

Effective Date - 01/01/2013

Step	percent	Apprentice Base Wage	Health	Pension	Supplemental Unemployment	Total Rate
1	50	$16.99	$7.80	$0.00	$0.00	$24.79
2	55	$18.68	$7.80	$3.52	$0.00	$30.00
3	60	$20.38	$7.80	$3.84	$0.00	$32.02
4	65	$22.08	$7.80	$4.16	$0.00	$34.04
5	70	$23.78	$7.80	$13.68	$0.00	$45.26
6	75	$25.48	$7.80	$14.00	$0.00	$47.28
7	80	$27.18	$7.80	$14.32	$0.00	$49.30
8	90	$30.57	$7.80	$14.96	$0.00	$53.33

Notes:

Apprentice to Journeyworker Ratio:1:1

PAINTER (TRAFFIC MARKINGS) *LABORERS - ZONE 2*	06/01/2013	$29.85	$7.10	$11.80	$0.00	$48.75
	12/01/2013	$30.35	$7.10	$11.80	$0.00	$49.25
	06/01/2014	$30.85	$7.10	$11.80	$0.00	$49.75
	12/01/2014	$31.35	$7.10	$11.80	$0.00	$50.25
	06/01/2015	$31.85	$7.10	$11.80	$0.00	$50.75
	12/01/2015	$32.35	$7.10	$11.80	$0.00	$51.25
	06/01/2016	$32.85	$7.10	$11.80	$0.00	$51.75
	12/01/2016	$33.60	$7.10	$11.80	$0.00	$52.50
For Apprentice rates see "Apprentice- LABORER"						
PAINTER / TAPER (BRUSH, NEW) * * If 30% or more of surfaces to be painted are new construction, NEW paint rate shall be used.*PAINTERS LOCAL 35 - ZONE 2*	01/01/2013	$34.51	$7.80	$15.60	$0.00	$57.91

Apprentice - *PAINTER - Local 35 Zone 2 - BRUSH NEW*

Effective Date - 01/01/2013

Step	percent	Apprentice Base Wage	Health	Pension	Supplemental Unemployment	Total Rate
1	50	$17.26	$7.80	$0.00	$0.00	$25.06
2	55	$18.98	$7.80	$3.52	$0.00	$30.30
3	60	$20.71	$7.80	$3.84	$0.00	$32.35
4	65	$22.43	$7.80	$4.16	$0.00	$34.39
5	70	$24.16	$7.80	$13.68	$0.00	$45.64
6	75	$25.88	$7.80	$14.00	$0.00	$47.68
7	80	$27.61	$7.80	$14.32	$0.00	$49.73
8	90	$31.06	$7.80	$14.96	$0.00	$53.82

Notes:

Steps are 750 hrs.

Apprentice to Journeyworker Ratio:1:1

Classification	Effective Date	Base Wage	Health	Pension	Supplemental Unemployment	Total Rate
PAINTER / TAPER (BRUSH, REPAINT) *PAINTERS LOCAL 35 - ZONE 2*	01/01/2013	$32.57	$7.80	$15.60	$0.00	$55.97

Apprentice - *PAINTER Local 35 Zone 2 - BRUSH REPAINT*

Effective Date - 01/01/2013

Step	percent	Apprentice Base Wage	Health	Pension	Supplemental Unemployment	Total Rate
1	50	$16.29	$7.80	$0.00	$0.00	$24.09
2	55	$17.91	$7.80	$3.52	$0.00	$29.23
3	60	$19.54	$7.80	$3.84	$0.00	$31.18
4	65	$21.17	$7.80	$4.16	$0.00	$33.13
5	70	$22.80	$7.80	$13.68	$0.00	$44.28
6	75	$24.43	$7.80	$14.00	$0.00	$46.23
7	80	$26.06	$7.80	$14.32	$0.00	$48.18
8	90	$29.31	$7.80	$14.96	$0.00	$52.07

Notes:
Steps are 750 hrs.

Apprentice to Journeyworker Ratio:1:1

PANEL & PICKUP TRUCKS DRIVER *TEAMSTERS JOINT COUNCIL NO. 10 ZONE A*	12/01/2012	$31.38	$8.91	$8.00	$0.00	$48.29
PIER AND DOCK CONSTRUCTOR (UNDERPINNING AND DECK) *PILE DRIVER LOCAL 56 (ZONE 1)*	08/01/2012	$39.20	$9.80	$17.67	$0.00	$66.67
	08/01/2013	$40.70	$9.80	$17.67	$0.00	$68.17
	08/01/2014	$42.20	$9.80	$17.67	$0.00	$69.67
	08/01/2015	$43.70	$9.80	$17.67	$0.00	$71.17
PILE DRIVER *PILE DRIVER LOCAL 56 (ZONE 1)*	08/01/2012	$39.20	$9.80	$17.67	$0.00	$66.67
	08/01/2013	$40.70	$9.80	$17.67	$0.00	$68.17
	08/01/2014	$42.20	$9.80	$17.67	$0.00	$69.67
	08/01/2015	$43.70	$9.80	$17.67	$0.00	$71.17

Classification	Effective Date	Base Wage	Health	Pension	Supplemental Unemployment	Total Rate

Apprentice - *PILE DRIVER - Local 56 Zone 1*

Effective Date - 08/01/2012

Step	percent	Apprentice Base Wage	Health	Pension	Supplemental Unemployment	Total Rate
1	50	$19.60	$9.80	$17.67	$0.00	$47.07
2	60	$23.52	$9.80	$17.67	$0.00	$50.99
3	70	$27.44	$9.80	$17.67	$0.00	$54.91
4	75	$29.40	$9.80	$17.67	$0.00	$56.87
5	80	$31.36	$9.80	$17.67	$0.00	$58.83
6	80	$31.36	$9.80	$17.67	$0.00	$58.83
7	90	$35.28	$9.80	$17.67	$0.00	$62.75
8	90	$35.28	$9.80	$17.67	$0.00	$62.75

Effective Date - 08/01/2013

Step	percent	Apprentice Base Wage	Health	Pension	Supplemental Unemployment	Total Rate
1	50	$20.35	$9.80	$17.67	$0.00	$47.82
2	60	$24.42	$9.80	$17.67	$0.00	$51.89
3	70	$28.49	$9.80	$17.67	$0.00	$55.96
4	75	$30.53	$9.80	$17.67	$0.00	$58.00
5	80	$32.56	$9.80	$17.67	$0.00	$60.03
6	80	$32.56	$9.80	$17.67	$0.00	$60.03
7	90	$36.63	$9.80	$17.67	$0.00	$64.10
8	90	$36.63	$9.80	$17.67	$0.00	$64.10

Notes:

Apprentice to Journeyworker Ratio:1:3

PIPEFITTER & STEAMFITTER *PIPEFITTERS LOCAL 537*	03/01/2013	$49.34	$8.75	$14.39	$0.00	$72.48

Apprentice - *PIPEFITTER - Local 537*

Effective Date - 03/01/2013

Step	percent	Apprentice Base Wage	Health	Pension	Supplemental Unemployment	Total Rate
1	40	$19.74	$8.75	$6.50	$0.00	$34.99
2	45	$22.20	$8.75	$14.39	$0.00	$45.34
3	60	$29.60	$8.75	$14.39	$0.00	$52.74
4	70	$34.54	$8.75	$14.39	$0.00	$57.68
5	80	$39.47	$8.75	$14.39	$0.00	$62.61

Notes:

** 1:3; 3:15; 1:10 thereafter / Steps are 1 yr.
Refrig/AC Mechanic **1:1;1:2;2:4;3:6;4:8;5:10;6:12;7:14;8:17;9:20;10:23(Max)

Apprentice to Journeyworker Ratio:**

Classification	Effective Date	Base Wage	Health	Pension	Supplemental Unemployment	Total Rate
PIPELAYER *LABORERS - ZONE 2*	06/01/2013	$30.10	$7.10	$11.80	$0.00	$49.00
	12/01/2013	$30.60	$7.10	$11.80	$0.00	$49.50
	06/01/2014	$31.10	$7.10	$11.80	$0.00	$50.00
	12/01/2014	$31.60	$7.10	$11.80	$0.00	$50.50
	06/01/2015	$32.10	$7.10	$11.80	$0.00	$51.00
	12/01/2015	$32.60	$7.10	$11.80	$0.00	$51.50
	06/01/2016	$33.10	$7.10	$11.80	$0.00	$52.00
	12/01/2016	$33.85	$7.10	$11.80	$0.00	$52.75
For apprentice rates see "Apprentice- LABORER"						
PLUMBERS & GASFITTERS *PLUMBERS & GASFITTERS LOCAL 12*	03/01/2013	$49.31	$9.32	$13.29	$0.00	$71.92

Apprentice - *PLUMBER/GASFITTER - Local 12*

Effective Date - 03/01/2013

Step	percent	Apprentice Base Wage	Health	Pension	Supplemental Unemployment	Total Rate
1	35	$17.26	$9.32	$4.97	$0.00	$31.55
2	40	$19.72	$9.32	$5.61	$0.00	$34.65
3	55	$27.12	$9.32	$7.53	$0.00	$43.97
4	65	$32.05	$9.32	$8.81	$0.00	$50.18
5	75	$36.98	$9.32	$10.09	$0.00	$56.39

Notes:

** 1:2; 2:6; 3:10; 4:14; 5:19/Steps are 1 yr
Step4 with lic$53.29 Step5 with lic$59.49

Apprentice to Journeyworker Ratio:**

PNEUMATIC CONTROLS (TEMP.) *PIPEFITTERS LOCAL 537*	03/01/2013	$49.34	$8.75	$14.39	$0.00	$72.48
For apprentice rates see "Apprentice- PIPEFITTER" or "PLUMBER/PIPEFITTER"						
PNEUMATIC DRILL/TOOL OPERATOR *LABORERS - ZONE 2*	06/01/2013	$30.10	$7.10	$11.80	$0.00	$49.00
	12/01/2013	$30.60	$7.10	$11.80	$0.00	$49.50
	06/01/2014	$31.10	$7.10	$11.80	$0.00	$50.00
	12/01/2014	$31.60	$7.10	$11.80	$0.00	$50.50
	06/01/2015	$32.10	$7.10	$11.80	$0.00	$51.00
	12/01/2015	$32.60	$7.10	$11.80	$0.00	$51.50
	06/01/2016	$33.10	$7.10	$11.80	$0.00	$52.00
	12/01/2016	$33.85	$7.10	$11.80	$0.00	$52.75
For apprentice rates see "Apprentice- LABORER"						
POWDERMAN & BLASTER *LABORERS - ZONE 2*	06/01/2013	$30.85	$7.10	$11.80	$0.00	$49.75
	12/01/2013	$31.35	$7.10	$11.80	$0.00	$50.25
	06/01/2014	$31.85	$7.10	$11.80	$0.00	$50.75
	12/01/2014	$32.35	$7.10	$11.80	$0.00	$51.25
	06/01/2015	$32.85	$7.10	$11.80	$0.00	$51.75
	12/01/2015	$33.35	$7.10	$11.80	$0.00	$52.25
	06/01/2016	$33.85	$7.10	$11.80	$0.00	$52.75
	12/01/2016	$34.60	$7.10	$11.80	$0.00	$53.50
For apprentice rates see "Apprentice- LABORER"						

Classification	Effective Date	Base Wage	Health	Pension	Supplemental Unemployment	Total Rate
POWER SHOVEL/DERRICK/TRENCHING MACHINE *OPERATING ENGINEERS LOCAL 4*	06/01/2013	$40.34	$10.00	$13.55	$0.00	$63.89
	12/01/2013	$41.12	$10.00	$13.55	$0.00	$64.67
For apprentice rates see "Apprentice- OPERATING ENGINEERS"						
PUMP OPERATOR (CONCRETE) *OPERATING ENGINEERS LOCAL 4*	06/01/2013	$40.34	$10.00	$13.55	$0.00	$63.89
	12/01/2013	$41.12	$10.00	$13.55	$0.00	$64.67
For apprentice rates see "Apprentice- OPERATING ENGINEERS"						
PUMP OPERATOR (DEWATERING, OTHER) *OPERATING ENGINEERS LOCAL 4*	06/01/2013	$28.19	$10.00	$13.55	$0.00	$51.74
	12/01/2013	$28.74	$10.00	$13.55	$0.00	$52.29
For apprentice rates see "Apprentice- OPERATING ENGINEERS"						
READY-MIX CONCRETE DRIVER *TEAMSTERS LOCAL 25b*	05/01/2011	$28.03	$7.75	$5.91	$0.00	$41.69
RECLAIMERS *OPERATING ENGINEERS LOCAL 4*	06/01/2013	$39.96	$10.00	$13.55	$0.00	$63.51
	12/01/2013	$40.74	$10.00	$13.55	$0.00	$64.29
For apprentice rates see "Apprentice- OPERATING ENGINEERS"						
RESIDENTIAL WOOD FRAME (All Other Work) *CARPENTERS -ZONE 2 (Residential Wood)*	04/01/2011	$24.24	$8.67	$15.51	$0.00	$48.42
RESIDENTIAL WOOD FRAME CARPENTER ** ** The Residential Wood Frame Carpenter classification applies only to the construction of new, wood frame residences that do not exceed four stories including the basement.*CARPENTERS -ZONE 2 (Residential Wood)*	05/01/2011	$24.24	$6.34	$6.23	$0.00	$36.81
As of 9/1/09 Carpentry work on wood-frame residential WEATHERIZATION projects shall be paid the RESIDENTIAL WOOD FRAME CARPENTER rate.						
RIDE-ON MOTORIZED BUGGY OPERATOR *LABORERS - ZONE 2*	06/01/2013	$30.10	$7.10	$11.80	$0.00	$49.00
	12/01/2013	$30.60	$7.10	$11.80	$0.00	$49.50
	06/01/2014	$31.10	$7.10	$11.80	$0.00	$50.00
	12/01/2014	$31.60	$7.10	$11.80	$0.00	$50.50
	06/01/2015	$32.10	$7.10	$11.80	$0.00	$51.00
	12/01/2015	$32.60	$7.10	$11.80	$0.00	$51.50
	06/01/2016	$33.10	$7.10	$11.80	$0.00	$52.00
	12/01/2016	$33.85	$7.10	$11.80	$0.00	$52.75
For apprentice rates see "Apprentice- LABORER"						
ROLLER/SPREADER/MULCHING MACHINE *OPERATING ENGINEERS LOCAL 4*	06/01/2013	$39.96	$10.00	$13.55	$0.00	$63.51
	12/01/2013	$40.74	$10.00	$13.55	$0.00	$64.29
For apprentice rates see "Apprentice- OPERATING ENGINEERS"						
ROOFER (Inc.Roofer Waterproofng &Roofer Damproofg) *ROOFERS LOCAL 33*	02/01/2013	$37.41	$10.50	$10.70	$0.00	$58.61

Classification	Effective Date	Base Wage	Health	Pension	Supplemental Unemployment	Total Rate

Apprentice - *ROOFER - Local 33*

Effective Date - 02/01/2013

Step	percent	Apprentice Base Wage	Health	Pension	Supplemental Unemployment	Total Rate
1	50	$18.71	$10.50	$3.38	$0.00	$32.59
2	60	$22.45	$10.50	$10.70	$0.00	$43.65
3	65	$24.32	$10.50	$10.70	$0.00	$45.52
4	75	$28.06	$10.50	$10.70	$0.00	$49.26
5	85	$31.80	$10.50	$10.70	$0.00	$53.00

Notes: ** 1:5, 2:6-10, the 1:10; Reroofing: 1:4, then 1:1
Step 1 is 2000 hrs.; Steps 2-5 are 1000 hrs.

Apprentice to Journeyworker Ratio:**

ROOFER SLATE / TILE / PRECAST CONCRETE *ROOFERS LOCAL 33*	02/01/2013	$37.66	$10.50	$10.70	$0.00	$58.86

For apprentice rates see "Apprentice- ROOFER"

SHEETMETAL WORKER *SHEETMETAL WORKERS LOCAL 17 - A*	02/01/2013	$42.32	$9.82	$18.24	$2.11	$72.49

Apprentice - *SHEET METAL WORKER - Local 17-A*

Effective Date - 02/01/2013

Step	percent	Apprentice Base Wage	Health	Pension	Supplemental Unemployment	Total Rate
1	40	$16.93	$9.82	$4.00	$0.00	$30.75
2	40	$16.93	$9.82	$4.00	$0.00	$30.75
3	45	$19.04	$9.82	$8.00	$1.11	$37.97
4	45	$19.04	$9.82	$8.00	$1.11	$37.97
5	50	$21.16	$9.82	$8.75	$1.19	$40.92
6	50	$21.16	$9.82	$9.00	$1.20	$41.18
7	60	$25.39	$9.82	$10.24	$1.36	$46.81
8	65	$27.51	$9.82	$10.99	$1.45	$49.77
9	75	$31.74	$9.82	$12.49	$1.62	$55.67
10	85	$35.97	$9.82	$13.49	$1.78	$61.06

Notes:
Steps are 6 mos.

Apprentice to Journeyworker Ratio:1:4

SIGN ERECTOR *PAINTERS LOCAL 35 - ZONE 2*	06/01/2013	$25.81	$7.07	$7.05	$0.00	$39.93

Classification	Effective Date	Base Wage	Health	Pension	Supplemental Unemployment	Total Rate

Apprentice - *SIGN ERECTOR - Local 35 Zone 2*

Effective Date - 06/01/2013

Step	percent	Apprentice Base Wage	Health	Pension	Supplemental Unemployment	Total Rate
1	50	$12.91	$7.07	$0.00	$0.00	$19.98
2	55	$14.20	$7.07	$2.45	$0.00	$23.72
3	60	$15.49	$7.07	$2.45	$0.00	$25.01
4	65	$16.78	$7.07	$2.45	$0.00	$26.30
5	70	$18.07	$7.07	$7.05	$0.00	$32.19
6	75	$19.36	$7.07	$7.05	$0.00	$33.48
7	80	$20.65	$7.07	$7.05	$0.00	$34.77
8	85	$21.94	$7.07	$7.05	$0.00	$36.06
9	90	$23.23	$7.07	$7.05	$0.00	$37.35

Notes:

Steps are 4 mos.

Apprentice to Journeyworker Ratio:1:1

SPECIALIZED EARTH MOVING EQUIP < 35 TONS *TEAMSTERS JOINT COUNCIL NO. 10 ZONE A*	12/01/2012	$31.84	$8.91	$8.00	$0.00	$48.75
SPECIALIZED EARTH MOVING EQUIP > 35 TONS *TEAMSTERS JOINT COUNCIL NO. 10 ZONE A*	12/01/2012	$32.13	$8.91	$8.00	$0.00	$49.04
SPRINKLER FITTER *SPRINKLER FITTERS LOCAL 550 - (Section A)*	03/01/2013	$52.58	$8.42	$12.60	$0.00	$73.60

Apprentice - *SPRINKLER FITTER - Local 550*

Effective Date - 03/01/2013

Step	percent	Apprentice Base Wage	Health	Pension	Supplemental Unemployment	Total Rate
1	35	$18.40	$8.42	$8.00	$0.00	$34.82
2	40	$21.03	$8.42	$8.00	$0.00	$37.45
3	45	$23.66	$8.42	$8.00	$0.00	$40.08
4	50	$26.29	$8.42	$8.00	$0.00	$42.71
5	55	$28.92	$8.42	$8.00	$0.00	$45.34
6	60	$31.55	$8.42	$8.00	$0.00	$47.97
7	65	$34.18	$8.42	$8.00	$0.00	$50.60
8	70	$36.81	$8.42	$8.00	$0.00	$53.23
9	75	$39.44	$8.42	$8.00	$0.00	$55.86
10	80	$42.06	$8.42	$8.00	$0.00	$58.48

Notes:

Steps are 850 hours

Apprentice to Journeyworker Ratio:1:1

STEAM BOILER OPERATOR *OPERATING ENGINEERS LOCAL 4*	06/01/2013	$39.96	$10.00	$13.55	$0.00	$63.51
	12/01/2013	$40.74	$10.00	$13.55	$0.00	$64.29

For apprentice rates see "Apprentice- OPERATING ENGINEERS"

Classification	Effective Date	Base Wage	Health	Pension	Supplemental Unemployment	Total Rate
TAMPERS, SELF-PROPELLED OR TRACTOR DRAWN *OPERATING ENGINEERS LOCAL 4*	06/01/2013	$39.96	$10.00	$13.55	$0.00	$63.51
	12/01/2013	$40.74	$10.00	$13.55	$0.00	$64.29
For apprentice rates see "Apprentice- OPERATING ENGINEERS"						
TELECOMMUNICATION TECHNICIAN *ELECTRICIANS LOCAL 103*	03/01/2013	$32.64	$13.00	$12.51	$0.00	$58.15
	09/01/2013	$33.15	$13.00	$12.52	$0.00	$58.67
	03/01/2014	$33.69	$13.00	$12.54	$0.00	$59.23
	09/01/2014	$34.20	$13.00	$12.56	$0.00	$59.76
	03/01/2015	$34.74	$13.00	$12.57	$0.00	$60.31
	09/01/2015	$35.45	$13.00	$12.59	$0.00	$61.04
	03/01/2016	$36.17	$13.00	$12.62	$0.00	$61.79

Apprentice - *TELECOMMUNICATION TECHNICIAN - Local 103*

Effective Date - 03/01/2013

Step	percent	Apprentice Base Wage	Health	Pension	Supplemental Unemployment	Total Rate
1	40	$13.06	$13.00	$0.39	$0.00	$26.45
2	40	$13.06	$13.00	$0.39	$0.00	$26.45
3	45	$14.69	$13.00	$10.77	$0.00	$38.46
4	45	$14.69	$13.00	$10.77	$0.00	$38.46
5	50	$16.32	$13.00	$11.02	$0.00	$40.34
6	55	$17.95	$13.00	$11.27	$0.00	$42.22
7	60	$19.58	$13.00	$11.52	$0.00	$44.10
8	65	$21.22	$13.00	$11.77	$0.00	$45.99
9	70	$22.85	$13.00	$12.02	$0.00	$47.87
10	75	$24.48	$13.00	$12.26	$0.00	$49.74

Effective Date - 09/01/2013

Step	percent	Apprentice Base Wage	Health	Pension	Supplemental Unemployment	Total Rate
1	40	$13.26	$13.00	$0.40	$0.00	$26.66
2	40	$13.26	$13.00	$0.40	$0.00	$26.66
3	45	$14.92	$13.00	$9.79	$0.00	$37.71
4	45	$14.92	$13.00	$9.79	$0.00	$37.71
5	50	$16.58	$13.00	$10.04	$0.00	$39.62
6	55	$18.23	$13.00	$10.29	$0.00	$41.52
7	60	$19.89	$13.00	$10.54	$0.00	$43.43
8	65	$21.55	$13.00	$10.79	$0.00	$45.34
9	70	$23.21	$13.00	$11.04	$0.00	$47.25
10	75	$24.86	$13.00	$11.29	$0.00	$49.15

Notes:

Apprentice to Journeyworker Ratio:1:1

Classification	Effective Date	Base Wage	Health	Pension	Supplemental Unemployment	Total Rate
TERRAZZO FINISHERS *BRICKLAYERS LOCAL 3 - MARBLE & TILE*	02/01/2013	$46.35	$10.18	$17.83	$0.00	$74.36
	08/01/2013	$47.25	$10.18	$17.90	$0.00	$75.33
	02/01/2014	$47.81	$10.18	$17.90	$0.00	$75.89
	08/01/2014	$48.71	$10.18	$17.97	$0.00	$76.86
	02/01/2015	$49.27	$10.18	$17.97	$0.00	$77.42
	08/01/2015	$50.17	$10.18	$18.04	$0.00	$78.39
	02/01/2016	$50.74	$10.18	$18.04	$0.00	$78.96
	08/01/2016	$51.64	$10.18	$18.12	$0.00	$79.94
	02/01/2017	$52.21	$10.18	$18.12	$0.00	$80.51

Apprentice - *TERRAZZO FINISHER - Local 3 Marble & Tile*

Effective Date - 02/01/2013

Step	percent	Apprentice Base Wage	Health	Pension	Supplemental Unemployment	Total Rate
1	50	$23.18	$10.18	$17.83	$0.00	$51.19
2	60	$27.81	$10.18	$17.83	$0.00	$55.82
3	70	$32.45	$10.18	$17.83	$0.00	$60.46
4	80	$37.08	$10.18	$17.83	$0.00	$65.09
5	90	$41.72	$10.18	$17.83	$0.00	$69.73

Effective Date - 08/01/2013

Step	percent	Apprentice Base Wage	Health	Pension	Supplemental Unemployment	Total Rate
1	50	$23.63	$10.18	$17.90	$0.00	$51.71
2	60	$28.35	$10.18	$17.90	$0.00	$56.43
3	70	$33.08	$10.18	$17.90	$0.00	$61.16
4	80	$37.80	$10.18	$17.90	$0.00	$65.88
5	90	$42.53	$10.18	$17.90	$0.00	$70.61

Notes:

Apprentice to Journeyworker Ratio:1:3

TEST BORING DRILLER *LABORERS - FOUNDATION AND MARINE*	06/01/2013	$34.45	$7.10	$12.60	$0.00	$54.15
	12/01/2013	$35.20	$7.10	$12.60	$0.00	$54.90
	06/01/2014	$35.95	$7.10	$12.60	$0.00	$55.65
	12/01/2014	$36.70	$7.10	$12.60	$0.00	$56.40
	06/01/2015	$37.45	$7.10	$12.60	$0.00	$57.15
	12/01/2015	$38.20	$7.10	$12.60	$0.00	$57.90
	06/01/2016	$38.95	$7.10	$12.60	$0.00	$58.65
	12/01/2016	$39.95	$7.10	$12.60	$0.00	$59.65

For apprentice rates see "Apprentice- LABORER"

Classification	Effective Date	Base Wage	Health	Pension	Supplemental Unemployment	Total Rate
TEST BORING DRILLER HELPER *LABORERS - FOUNDATION AND MARINE*	06/01/2013	$33.17	$7.10	$12.60	$0.00	$52.87
	12/01/2013	$33.92	$7.10	$12.60	$0.00	$53.62
	06/01/2014	$34.67	$7.10	$12.60	$0.00	$54.37
	12/01/2014	$35.42	$7.10	$12.60	$0.00	$55.12
	06/01/2015	$36.17	$7.10	$12.60	$0.00	$55.87
	12/01/2015	$36.92	$7.10	$12.60	$0.00	$56.62
	06/01/2016	$37.67	$7.10	$12.60	$0.00	$57.37
	12/01/2016	$38.67	$7.10	$12.60	$0.00	$58.37
For apprentice rates see "Apprentice- LABORER"						
TEST BORING LABORER *LABORERS - FOUNDATION AND MARINE*	06/01/2013	$33.05	$7.10	$12.60	$0.00	$52.75
	12/01/2013	$33.80	$7.10	$12.60	$0.00	$53.50
	06/01/2014	$34.55	$7.10	$12.60	$0.00	$54.25
	12/01/2014	$35.30	$7.10	$12.60	$0.00	$55.00
	06/01/2015	$36.05	$7.10	$12.60	$0.00	$55.75
	12/01/2015	$36.80	$7.10	$12.60	$0.00	$56.50
	06/01/2016	$37.55	$7.10	$12.60	$0.00	$57.25
	12/01/2016	$38.55	$7.10	$12.60	$0.00	$58.25
For apprentice rates see "Apprentice- LABORER"						
TRACTORS/PORTABLE STEAM GENERATORS *OPERATING ENGINEERS LOCAL 4*	06/01/2013	$39.96	$10.00	$13.55	$0.00	$63.51
	12/01/2013	$40.74	$10.00	$13.55	$0.00	$64.29
For apprentice rates see "Apprentice- OPERATING ENGINEERS"						
TRAILERS FOR EARTH MOVING EQUIPMENT *TEAMSTERS JOINT COUNCIL NO. 10 ZONE A*	12/01/2012	$32.42	$9.07	$8.00	$0.00	$49.49
TUNNEL WORK - COMPRESSED AIR *LABORERS (COMPRESSED AIR)*	06/01/2013	$45.33	$7.10	$13.00	$0.00	$65.43
	12/01/2013	$46.08	$7.10	$13.00	$0.00	$66.18
	06/01/2014	$46.83	$7.10	$13.00	$0.00	$66.93
	12/01/2014	$47.58	$7.10	$13.00	$0.00	$67.68
	06/01/2015	$48.33	$7.10	$13.00	$0.00	$68.43
	12/01/2015	$49.08	$7.10	$13.00	$0.00	$69.18
	06/01/2016	$49.83	$7.10	$13.00	$0.00	$69.93
	12/01/2016	$50.83	$7.10	$13.00	$0.00	$70.93
For apprentice rates see "Apprentice- LABORER"						
TUNNEL WORK - COMPRESSED AIR (HAZ. WASTE) *LABORERS (COMPRESSED AIR)*	06/01/2013	$47.33	$7.10	$13.00	$0.00	$67.43
	12/01/2013	$48.08	$7.10	$13.00	$0.00	$68.18
	06/01/2014	$48.83	$7.10	$13.00	$0.00	$68.93
	12/01/2014	$49.58	$7.10	$13.00	$0.00	$69.68
	06/01/2015	$50.33	$7.10	$13.00	$0.00	$70.43
	12/01/2015	$51.08	$7.10	$13.00	$0.00	$71.18
	06/01/2016	$51.83	$7.10	$13.00	$0.00	$71.93
	12/01/2016	$52.83	$7.10	$13.00	$0.00	$72.93
For apprentice rates see "Apprentice- LABORER"						

Classification	Effective Date	Base Wage	Health	Pension	Supplemental Unemployment	Total Rate
TUNNEL WORK - FREE AIR *LABORERS (FREE AIR TUNNEL)*	06/01/2013	$37.40	$7.10	$13.00	$0.00	$57.50
	12/01/2013	$38.15	$7.10	$13.00	$0.00	$58.25
	06/01/2014	$38.90	$7.10	$13.00	$0.00	$59.00
	12/01/2014	$39.65	$7.10	$13.00	$0.00	$59.75
	06/01/2015	$40.40	$7.10	$13.00	$0.00	$60.50
	12/01/2015	$41.15	$7.10	$13.00	$0.00	$61.25
	06/01/2016	$41.90	$7.10	$13.00	$0.00	$62.00
	12/01/2016	$42.90	$7.10	$13.00	$0.00	$63.00
For apprentice rates see "Apprentice- LABORER"						
TUNNEL WORK - FREE AIR (HAZ. WASTE) *LABORERS (FREE AIR TUNNEL)*	06/01/2013	$39.40	$7.10	$13.00	$0.00	$59.50
	12/01/2013	$40.15	$7.10	$13.00	$0.00	$60.25
	06/01/2014	$40.90	$7.10	$13.00	$0.00	$61.00
	12/01/2014	$41.65	$7.10	$13.00	$0.00	$61.75
	06/01/2015	$42.40	$7.10	$13.00	$0.00	$62.50
	12/01/2015	$43.15	$7.10	$13.00	$0.00	$63.25
	06/01/2016	$43.90	$7.10	$13.00	$0.00	$64.00
	12/01/2016	$44.90	$7.10	$13.00	$0.00	$65.00
For apprentice rates see "Apprentice- LABORER"						
VAC-HAUL *TEAMSTERS JOINT COUNCIL NO. 10 ZONE A*	12/01/2012	$31.84	$8.91	$8.00	$0.00	$48.75
WAGON DRILL OPERATOR *LABORERS - ZONE 2*	06/01/2013	$30.10	$7.10	$11.80	$0.00	$49.00
	12/01/2013	$30.60	$7.10	$11.80	$0.00	$49.50
	06/01/2014	$31.10	$7.10	$11.80	$0.00	$50.00
	12/01/2014	$31.60	$7.10	$11.80	$0.00	$50.50
	06/01/2015	$32.10	$7.10	$11.80	$0.00	$51.00
	12/01/2015	$32.60	$7.10	$11.80	$0.00	$51.50
	06/01/2016	$33.10	$7.10	$11.80	$0.00	$52.00
	12/01/2016	$33.85	$7.10	$11.80	$0.00	$52.75
For apprentice rates see "Apprentice- LABORER"						
WASTE WATER PUMP OPERATOR *OPERATING ENGINEERS LOCAL 4*	06/01/2013	$40.34	$10.00	$13.55	$0.00	$63.89
	12/01/2013	$41.12	$10.00	$13.55	$0.00	$64.67
For apprentice rates see "Apprentice- OPERATING ENGINEERS"						
WATER METER INSTALLER *PLUMBERS & GASFITTERS LOCAL 12*	03/01/2013	$49.31	$9.32	$13.29	$0.00	$71.92
For apprentice rates see "Apprentice- PLUMBER/PIPEFITTER" or "PLUMBER/GASFITTER"						

Additional Apprentice Information:

Minimum wage rates for apprentices employed on public works projects are listed above as a percentage of the pre-determined hourly wage rate established by the Commissioner under the provisions of the M.G.L. c. 149, ss. 26-27D. Apprentice ratios are established by the Division of Apprenticeship Training pursuant to M.G.L. c. 23, ss. 11E-11L.

All apprentices must be registered with the Division of Apprenticeship Training in accordance with M.G.L. c. 23, ss. 11E-11L.

All steps are six months (1000 hours) unless otherwise specified.

* Ratios are expressed in allowable number of apprentices to journeymen or fraction thereof.
** Multiple ratios are listed in the comment field.
*** APP to JM; 1:1, 2:2, 2:3, 3:4, 4:4, 4:5, 4:6, 5:7, 6:7, 6:8, 6:9, 7:10, 8:10, 8:11, 8:12, 9:13, 10:13, 10:14, etc.
**** APP to JM; 1:1, 1:2, 2:3, 2:4, 3:5, 4:6, 4:7, 5:8, 6:9, 6:10, 7:11, 8:12, 8:13, 9:14, 10:15, 10:16, etc.

COMMONWEALTH OF MASSACHUSETTS
CONTRACTOR'S WEEKLY WORKFORCE UTILIZATION REPORT

Project Name: _____ Contract No.: _____ Contract Value: _____ Minority Hiring Goal: _____ Women Hiring Goal: _____

Name of General Contractor: _____ Address: _____ Telephone No.: _____

Name of Contractor Filing Report: _____ Address: _____ Telephone No.: _____

Week Ending: _____ Report No.: _____ Date Work Began: _____ **Check here if this is a final report** ☐ Date Work Completed: _____

Job Category	# Emp.	Weekly Total Work Hours	# Minority	Weekly Total Minority Hours	Minority %	# Women	Weekly Total Woman Hours	Woman %	Total Workforce Utilization Since Contract Began					Remarks
									Work Hrs. to Date	Minority Hrs. to Date	Minority % to Date	Woman Hs. To Date	Woman % to Date	
TOTAL														

Prepared by: _____

Title: _____

Phone: _____

Date: _____

Name of Job Superintendent/Foreman: _____

_____

Phone:

Copy to: **Resident Engineer Or Project Manager**

COMMONWEALTH OF MASSACHUSETTS
QUARTERLY PROJECTED WORK FORCE TABLE

Name of Contractor: _____

Address: _____

Telephone: _____ **Fax:** _____

Trades Utilized: _____

WEEK ENDING	PROJECTED TOTAL HOURS BY ALL PERSONNEL	PROJECTED TOTAL OF ALL WOMEN AND MINORITY HOURS		TRADES USED THIS WEEK
		MINORITY HRS.	WOMEN HRS.	

NOTE: A REVISED TABLE MUST BE SUBMITTED IF ANY CHANGES ON PROJECTIONS OCCUR.

PREPARED BY: _____

MASSACHUSETTS WEEKLY CERTIFIED PAYROLL REPORT FORM

Company's Name:	Address:	Phone No.:	Payroll No.:

Employer's Signature:	Title:	Contract No:	Tax Payer ID No.	Work Week Ending:

Awarding Authority's Name:	Public Works Project Name:	Public Works Project Location:	Min. Wage Rate Sheet No.

General / Prime Contractor's Name:	Subcontractor's Name:	"Employer" Hourly Fringe Benefit Contributions

Employee Name & Complete Address	Employee is OSHA 10 Certified (?)	Work Classification:	Appr. Rate (%)	Hours Worked Su.	Mo.	Tu.	We.	Th.	Fr.	Sa.	Project Hours (A) / All Other Hours	Hourly Base Wage (B)	Health & Welfare Insurance (C')	ERISA Pension Plan (D)	Supp. Unemp. (E)	(B+C+D+E) Total Hourly Prev. Wage (F)	(A x F) Project Gross Wages (G) / Total Gross Wages	Check No. (H)

NOTE: Pursuant to MGL Ch. 149 s.27B, every contractor and subcontractor is required to submit a "true and accurate" copy of their weekly payroll records directly to the awarding authority. Failure to comply may result in the commencement of a criminal action or the issuance of a civil citation.

Date recieved by awarding authority

/ /

WEEKLY PAYROLL RECORDS REPORT
& STATEMENT OF COMPLIANCE

In accordance with Massachusetts General Law c. 149, §27B, a true and accurate record must be kept of all persons employed on the public works project for which the enclosed rates have been provided. A Payroll Form has been printed on the reverse of this page and includes all the information required to be kept by law. Every contractor or subcontractor is required to keep these records and preserve them for a period of three years from the date of completion of the contract.

In addition, every contractor and subcontractor is required to submit a copy of their weekly payroll records to the awarding authority. For every week in which an apprentice is employed, a photocopy of the apprentice's identification card must be attached to the payroll report. Once collected, the awarding authority is also required to preserve those records for three years.

In addition, each such contractor, subcontractor, or public body shall furnish to the awarding authority directly, within fifteen days after completion of its portion of the work a statement, executed by the contractor, subcontractor or public body who supervises the payment of wages, in the following form:

STATEMENT OF COMPLIANCE

_____, 20_____

I,_____,_____
(Name of signatory party) (Title)

do hereby state:

That I pay or supervise the payment of the persons employed by
_____ on the _____
(Contractor, subcontractor or public body) (Building or project)

and that all mechanics and apprentices, teamsters, chauffeurs and laborers employed on said project have been paid in accordance with wages determined under the provisions of sections twenty-six and twenty-seven of chapter one hundred and forty nine of the General Laws.

Signature _____

Title _____

SECTION 4 GENERAL SPECIFICATIONS

4.1 LOCATION AND WORK TO BE DONE

The location and work herein specified to be done is shown on the Contract Plans listed in Section 1.3 Drawings and Contract Documents and are hereby incorporated into these Specifications by reference. Additional drawings, showing details in accordance with which the work is to be constructed, will be furnished from time to time by the Engineer, if found necessary, and shall also then become a part thereof.

The Contractor shall furnish all materials not furnished by the Owner, and all labor, tools and equipment necessary to do all work required for the completion of this Contract as herein specified.

The Contractor shall at all times, during the course of the work, maintain a stock of repair materials on site that are suitable and adequate for the immediate repair of any existing water tubing, pipe or fitting that may be damaged by the Contractor during his operations. Similar repair materials for other utilities, such as sewer lines, shall also be stocked when the work is done in close proximity to these other utilities. The materials and the work required to repair any such damages shall be done promptly and at the Contractor's expense.

The work to be done and paid for shall not be limited to the exact extent mentioned or described but shall include all incidental work necessary or customarily done for the completion of the work.

4.2 PAYMENT

For all work done as specified herein, the Contractor shall be paid as provided in that article of the Form of Contract entitled, "Prices for Work".

4.3 MATERIALS AND WORK FURNISHED BY THE TOWN

The Town will furnish only the water required to test, flush or disinfect completed sections of new water mains or to flush new sewer or drain lines unless specifically stated elsewhere in this Contract.

4.4 HANDLING AND DISTRIBUTION

The Contractor shall, at his own expense handle, haul and distribute all materials and all surplus materials on the different portions of the work as required. He shall provide suitable and adequate storage room for materials and equipment during the progress of the work, and be responsible for any loss of or damage to materials and equipment furnished by him until the final acceptance of the work.

Delays in handling involving storage charges and demurrage charges by the railroad company shall be at the expense of the Contractor.

4.5 MATERIALS, SAMPLES, INSPECTION, APPROVAL

Unless otherwise expressly provided on the drawings or in any of the other Contract Documents, only new materials and equipment shall be incorporated in the work. All materials and equipment furnished by the Contractor to be incorporated in the work shall be subject to the inspection and approval of the Engineer. No material shall be processed or fabricated for the work or delivered to the work site without prior approval of the Engineer.

As soon as possible after execution of the Contract, the Contractor shall submit to the Engineer the names and addresses of the manufacturers and suppliers of all materials and equipment he proposes to incorporate into the work. When shop and working drawings are required as specified below, the contractor shall submit, prior to the submission of such drawings, data in sufficient detail to enable the Engineer to determine whether the manufacturer and/or the supplier have the ability to furnish a product meeting the specifications. As requested, the Contractor shall also submit data relating to the materials and equipment he proposes to incorporate into the work in sufficient detail to enable the Engineer to identify and evaluate the particular product and to determine whether it conforms to the Contract requirements.

No material or equipment shall be purchased or fabricated especially for the Contract until the required shop and working drawings have been submitted as required and approved as conforming to the Contract requirements. All such materials and equipment and the work involved in their installation or incorporation into the work shall then be as shown in and represented by said drawings.

The Contractor shall submit data and samples, or place his orders sufficiently early to permit consideration, inspection, testing and approval before the materials and equipment are needed for incorporation in the work. The consequences of his failure to do so shall be the contractor's sole responsibility.

The approval of shop and working drawings, etc., will be general only and shall not relieve or in any respect diminish the responsibility of the Contractor for details of design, dimensions, etc., necessary for proper fitting and construction of the work as required by the contract and for achieving the result and performance specified thereunder.

When required, the Contractor shall furnish to the Engineer in triplicate sworn copies of manufacturer's shop or mill tests (or reports from independent testing laboratories) relative to materials, equipment performance ratings and concrete data.

After approval of the samples, data, etc., the materials and equipment used on the work shall in all respects conform therewith.

4.6 INSPECTION OF WORK AWAY FROM THE SITE

If work to be done away from the construction site is to be inspected on behalf of the Owner during its fabrication, manufacture, or testing, or before shipment, the contractor shall give notice to the Engineer of the place and time where such fabrication, manufacture, testing, or shipping is to be done. Such notice shall be delivered to the Engineer, in writing, in ample time so that necessary arrangements for the inspection can be made.

4.7 OCCUPYING PRIVATE LAND

The Contractor shall not (except after consent from the proper parties) enter or occupy with men, tools, materials or equipment, any land outside the rights-of-way or property of the Owner.

4.8 INTERFERENCE WITH AND PROTECTION OF STREETS, DRIVES, ETC.

The Contractor shall not close nor obstruct any portion of a street, road or private way without first obtaining permits therefore from the proper authorities. If any street or private way shall be rendered unsafe by the Contractor's operations, he shall make such repairs or provide such temporary ways or guards as shall be acceptable to the Engineer. If it becomes necessary to fully close a street, road or private way, the Contractor shall give ample notice to the Needham Police and Fire Departments prior to such closing. The Contractor shall also place legible detour signs of sufficient size, so as to be easily read by the motoring public before approaching the construction area, as deemed by the Engineer or Police authority in his absence.

Streets, roads, private ways and walks shall be maintained passable by the Contractor at his expense and the Contractor shall assume full responsibility for the adequacy and safety of provisions made.

4.9 STORAGE OF MATERIALS AND EQUIPMENT

All excavated materials, construction equipment and materials and equipment to be incorporated in the new work, shall be so placed as not to injure the work, and so that free access may be had at any time to all parts of the work, and to all public utility installations in the vicinity of the work. Materials and equipment shall be kept neatly piled and compactly and conveniently stored so as to inconvenience as little as possible public travel and adjoining tenants. Materials and equipment to be incorporated into the work shall be stored and protected from the weather or other damage. If material or equipment is damaged while in storage, it shall be replaced or restored at the Contractor's expense.

Equipment shall be so stored as to not effect the manufacturer's guarantee of serviceability after completion of the work.

4.10 INSUFFICIENCY OF SAFETY PRECAUTIONS

If, at any time, in the opinion of the Engineer, the work is not properly lighted, barricaded and in all respects safe, both with respect to public travel or adjacent public or private property, and, under such circumstances, the Contractor does not or cannot immediately put the same into proper and approved condition, or if the Contractor or his representative is not upon the ground so that he can be immediately notified of the insufficiency of safety precautions, then the Engineer may put the work into such a condition that it shall be, in his opinion, in all respects safe, and the Contractor shall pay all expenses of such labor and materials as may have been used for this purpose by him or by the Engineer. Such action of the Engineer, or his failure to take such action, shall in no way relieve the Contractor of the entire responsibility for any cost, loss or damage by any party sustained on account of the insufficiency of the safety precautions taken by him or by the Engineer acting under authority of this section.

4.11 PUBLIC SAFETY

The Contractor shall furnish all local Police Officers to direct traffic and to keep the traffic off any part of the roadway in which construction is being carried on, as, in the opinion of the Engineer are necessary for such purpose. Arrangements for officers shall be made well in advance of the work schedule for each day. If for any reason the Contractor cancels work for that day, and the Needham Police Department is not given advance notice, the Contractor will be responsible for that officer's wages. Otherwise, the Owner will reimburse the Contractor for all other police details. Contractor must submit payments directly to the Needham Police Department and supply copies of invoices to the Department of Public Works as proof of payment.

4.12 LINES, GRADES AND MEASUREMENT

The controlling lines and grades shall be given to the Contractor, who shall provide at his own expense such batter boards, forms, materials and labor as may be required. Additional batter boards, lines, grades and forms shall be furnished and set by the Contractor as directed. If the Contractor through willfulness or carelessness removes, or permits to be removed said reference marks before the prosecution of the work requires it, they shall be replaced at his expense.

The Contractor shall make all measurements and check dimensions necessary for the proper construction of the work called for by the drawings and specifications, and, during the prosecution of the work, he shall make all necessary measurements to prevent misfitting in said work, and he shall be responsible therefore, and for the accurate construction of the entire work.

4.13 DIMENSIONS OF EXISTING STRUCTURES

Where the dimensions and locations of existing structures are of importance in the installation or connection of any part of the work, the Contractor shall verify such dimensions and locations in the field before the fabrication of any material or equipment which is dependent on the correctness of such information.

4.14 WORK TO CONFORM

All work shall conform during its progress and on its completion truly to the lines, levels and grades indicated on the drawings or given by the Engineer and shall be built in a thoroughly substantial and good workmanlike manner, in accordance with the plans and specifications and directions given from time to time by him. In no case shall any work in excess of the plan requirements and specifications be paid for unless ordered in writing by the Engineer.

All work done without instruction having been given therefor by the Engineer, or done without proper lines or levels, or done during the absence of the Engineer, or his inspector, will not be estimated or paid for except when such work is authorized by the Engineer in writing. Work so done may be ordered uncovered or taken down, removed and replaced at the Contractor's sole cost and expense.

4.15 PRECAUTIONS DURING ADVERSE WEATHER

The Contractor shall take all necessary precautions so that the work may be properly done and satisfactory in all respects. When required, protection shall be provided by use of tarpaulins, wood and building paper shelters, or other approved means.

Pipe shall not be laid on frozen subgrade. Snow, ice, frost crystals and frozen dirt or mud shall be removed from bells and spigots of pipes before they are laid and jointed.

The Engineer may suspend construction operations at any time when, in his judgment, the conditions are unsuitable or the proper precautions are not being taken, whatever the weather may be, in any season.

4.16 TOILET FACILITIES

The Contractor shall provide, maintain and pay for temporary toilet facilities for the sanitary necessities of all persons employed on the work, in compliance with the requirements of the Department of Health, local health offices and other authorities having jurisdiction.

Toilet facilities shall be placed at approved locations near the work and shall be kept clean and in sanitary condition at all times.

a. Temporary toilets shall be emptied and cleaned daily by the toilet supplier during the progress of the work.

b. Special provisions to brace the toilet enclosure shall be made to prevent it from being tipped over.

c. Toilets shall be locked during all non-work hours.

The Contractor shall rigorously prohibit the committing of nuisances upon the lands of the Owner, about the works or upon adjacent property.

SECTION 5 EARTHWORK

5.1 GENERAL SITE WORK

No work shall be started without 72 hours advance notice to the Engineer, without approval of the project schedule by the Engineer, and without application being made to the Water and Sewer Division, Highway Division, and Park Division, as applicable, of the Needham Department of Public Works.

No work shall be conducted without an inspector of the Public Works Department and the Contractor or his representative being present. The Contractor's representative shall have the authority to direct the work and carry out the requirements of the Engineer and/or inspector.

No work shall be started without the following being present or readily available as directed by the Engineer:

a. A 3" diaphragm pump and a 3" self-priming centrifugal "trash" pump, each in working condition with adequate suction and discharge hoses for excavations below 4 feet or groundwater elevation, whichever is shallower

b. A stockpile of 3/4" stone (crushed or screened), quantity as directed by the Engineer

c. Adequate lighted barricades, detour signs and police direction of traffic in accordance with the Manual on Uniform Traffic Control Devices and as directed by the Engineer

d. All materials, tools, equipment and manpower required to complete the work in accordance with the contract plans and these specifications

e. Equipment approved by the Engineer for compacting backfilled materials

Unless otherwise required by the Engineer, the Contractor shall so prosecute his work that pedestrian and vehicular traffic will be maintained over and through the work with a maximum of safety and convenience.

No work shall be undertaken in or within 100 feet of any area subject to protection under the Massachusetts Wetlands Protection Act, MGL c.131 s.40, or the Needham General Wetlands Protection Bylaw, Article 22, without the written permission of the Engineer.

The sequence of all excavation operations, earth or rock, shall be such as to insure the most efficient utilization of excavated materials into the work and the use of a minimum amount of additional borrow.

When the plans require excavation in areas in close proximity to existing roads, structures or utilities, it shall be the responsibility of the Contractor at his expense to use satisfactory means and methods to protect and maintain the stability of such roads, structures or utilities located immediately adjacent to but outside the limits of excavation.

The Contractor shall at all times, and at his own expense, preserve and protect from injury any adjacent property by providing proper foundations and lateral support, and by taking such other precautions as may be necessary for that purpose. The Contractor shall, at his own expense, shore up and protect buildings, trees, walls, property line markers, curbing, fences or other property likely to be damaged during the progress of the work and shall be responsible for all damage to public or private property or roadways resulting from his failure to properly protect and carry out said work. The Contractor shall not trim or remove, even temporarily, any trees or shrubs which exist in planting strip areas, without first obtaining the consent of the Director of Public Works or his designee, (See Massachusetts General Laws, Chapter 87, Section 5 - Cutting Trees).

The Contractor shall take reasonable care to avoid leaving any unsightly condition and to avoid unnecessary damage or injury to natural surroundings and roadside growth. The work area and surrounding landscape shall be left in a satisfactory, neat and trim condition at the end of each work day, as determined by the Engineer.

Dust control shall be provided as necessary (as determined by the Engineer) to prevent a nuisance to abutters and surrounding areas. Dust control shall be accomplished by wetting or use of calcium chloride or other method(s) approved by the Engineer. .

5.2 EROSION & SILTATION CONTROL

5.2.1 General

The Contractor shall exercise every reasonable precaution to prevent or minimize the silting of rivers, streams, ponds, water impoundments or wetland areas during actual construction and periods when the work may be temporarily suspended. This work shall consist of temporary control measures ordered by the Engineer during the life of the contract to control water pollution, through the use of berms, dikes, dams, sediment basins, screened or crushed stone, gravel, mulches, grasses, waterways, and other erosion control devices or methods.

The temporary pollution control provisions contained herein shall be coordinated with the permanent erosion control features specified elsewhere in the Contract to the extent practical to assure economical, effective and continuous erosion control throughout the construction and post-construction period.

The Engineer has the authority to limit the surface area of erodible earth material exposed by clearing and grubbing, grading, excavation, or borrow and fill

operations and to direct the Contractor to provide immediate permanent or temporary pollution control measures to prevent contamination of adjacent streams or other watercourses, wetlands, lakes, ponds or areas of water impoundment. All slopes shall be seeded and mulched as the earthwork proceeds to the extent considered desirable as practicable.

Where erosion is likely to be a problem, clearing and grubbing operations should be so scheduled and performed that grading operations and permanent erosion control features can follow immediately thereafter if the project conditions permit; otherwise temporary erosion control measures will be required before each successive construction stage.

The Engineer will limit the area of excavation, borrow and embankment operations in progress commensurate with the Contractor's capability in keeping the finish grading, mulching, seeding and other such permanent pollution control measures current in accordance with the accepted schedule. Should seasonal limitations make such coordination unrealistic, temporary erosion control measures shall be taken immediately to the extent feasible and justified, as determined by the Engineer.

If, in the judgment of the Engineer, the surface area of erodible earth material exposed has the potential for causing water pollution or excessive siltation of abutting property, the Engineer shall direct the Contractor to cease the applicable operations until satisfactory temporary or permanent erosion control measures are taken. In the event of conflict between these requirements and pollution control laws, rules or regulations of other Federal or State or local agencies, the more restrictive laws, rules or regulations shall apply.

The Contractor shall incorporate all permanent erosion control features into the project at the earliest practicable time, as outlined in his accepted schedule. Temporary pollution control measures will be used to correct conditions that develop during construction that were not foreseen during the design stage; that are needed prior to installation of permanent pollution control features; or that are needed to control erosion that develops during normal construction practices, but are not associated with permanent erosion control features on the project.

The fording of streams with equipment shall be kept to a minimum. Where stream crossings are contemplated and where fording might create sediment detrimental to fish, wildlife, water supplies or irrigation systems, temporary bridges or culverts shall be installed, the cost of which shall be absorbed by the Contractor.

Unless otherwise approved in writing by the Engineer, construction operations in rivers, streams, wetlands and impoundments shall be restricted to those areas where proposed channel changes are shown on the plans and to those areas which

must be entered for the construction of temporary or permanent structures. Rivers, streams, wetlands and impoundments shall be promptly cleared of all false work, piling, debris, or other obstructions placed therein or caused by the construction operations.

Excavation from the roadway, channel changes, cofferdams, etc., shall not be deposited in or so near to rivers, streams, wetlands or impoundments that it will be washed away by high water or runoff.

When the Contractor uses water from natural sources for any of his operations, intake methods shall be such as to avoid contaminating the source of supply and maintain adequate downstream flow when the source is a stream.

Pollutants such as chemicals, fuels, lubricants, bitumens, raw sewage and other harmful waste shall not be discharged into or alongside of rivers, streams, impoundments, catch basins or into natural or man-made channels leading thereto.

5.2.2 Hay Bales, Silt Fence and Filtration Devices

Hay bales and/or silt fence when shown on the contract plans or directed by the Engineer shall be installed by the Contractor in the designated areas as specified on the contract plans and as specified herein.

Hay bales shall consist of air-dried hay or straw essentially free from undesirable seeds and coarse materials held tightly together with twine, jute, plastic or wire to form a bale. Salt marsh hay shall not be used. If plastic or wire is used to form the bale, it shall be removed from the project site by the Contractor once vegetation has been established.

Each hay bale shall be placed firmly against the earth's surface and securely staked in place with two (2) 2 inch by 2 inch by 3 foot wooden stakes as shown on the contract plans. The bales shall be tightly butted against each other to form a continuous barrier in the designated locations and maintained until vegetation has been established. After vegetation has been established as determined by the Engineer, the stakes shall be removed and the hay bales broken apart and spread evenly over the adjacent vegetated areas as directed by the Engineer. The removed stakes shall be removed from the site and properly disposed of by the Contractor.

Silt fencing shall consist of a woven or nonwoven geotextile fabric meeting section M9.50.0 IV of The Commonwealth of Massachusetts Department of Public Works Standard Specification for Highways and Bridges, 1988, attached to a heavy-duty mesh reinforcement and 1 inch by 1 inch by 3 foot wooden stakes 8 feet on center. The bottom of the silt fence shall be toed into the ground in such a way as to

prevent the passage of runoff under the fence. After vegetation has been established as determined by the Engineer, the silt fence shall be removed from the site and properly disposed of by the Contractor.

Filtration devices can vary depending on the purpose for which they are required. Examples of some filtration devices include an amount of filter fabric forming a bag over the end of a pump discharge hose, discharging a pump hose through a sand filter or using an infiltration basin to contain a discharge. Filtration devices shall be used when and as directed by the Engineer. The cost involved with filtration devices is considered incidental to the particular work involved. No additional compensation will be made for the construction, operation or maintenance of filtration devices.

5.2.3 Measurement and Payment

Hay bales and silt fence shall be measured as installed on a per linear foot basis.

Payment will be made at the contract unit price per linear foot of hay bales or silt fence installed and removed after project completion in accordance with these specifications or as shown on the contract plans or Conservation Commission Permit.

Payment Items

	Unit
5.2.3a Hay Bales	Linear Foot
5.2.3b Silt Fence	Linear Foot

5.3 CLEARING & GRUBBING

5.3.1 Clearing Vegetated Areas

This work shall consist of clearing, grubbing, cutting, removal and disposal of all vegetation and debris from areas as shown on the plans or designated by the Engineer. The work shall also include the preservation from injury or defacement of all vegetation and objects designated by the Engineer to remain. (See Section 10.)

The burning of trees, brush, stumps, etc., will not be permitted. The Contractor shall provide other satisfactory methods of disposal without additional compensation.

The Contractor shall obtain written permission from the Engineer for use of storage areas within the easement or property lines requiring clearing and grubbing or selective clearing and thinning. Any clearing for the Contractor's convenience shall be done at his own expense. All such areas shall be restored to a condition

acceptable to the Engineer including necessary mulching, seeding, and planting without additional compensation.

The Engineer shall be provided with copies of agreements between the Contractor and owners of private properties used as disposal or storage areas.

The Contractor shall make all arrangements and negotiations necessary for the satisfactory disposal of trees, shrubs, stumps, roots, dead wood and other litter, off site in designated disposal areas.

The stumps of all trees, brush and major roots shall be grubbed and removed from all excavation areas and under all embankments.

Trees and shrubs that are specifically designated by the Engineer not to be cut, removed, destroyed or trimmed shall be saved from harm and injury.

All damage occurring to trees by the Contractor's operation and all branches of trees extending within the roadway shall be trimmed where cut as directed by the Engineer to provide a 15 foot minimum vertical clearance including selective trimming of such trees as directed.

Tree schedule to be removed which are near power lines shall be removed by an arborist certified to remove trees near power lines.

5.3.2 Selective Clearing and Thinning

The work under this item shall consist of the removal of hazardous growth and dead, dying or diseased plant material; the removal of groups and individual plants which interfere with the growth of more desirable types of trees and the clearing away of lesser growth that may obscure outstanding trees, tree groups, or scenic views. Any part of tree trunks or base of plant material located on the easement limit lines shall be considered within the easement.

Densely wooded areas shall be thinned to provide space for healthy growth by eliminating thinner, weaker trees and the reduction of number of varieties.

The Contractor's attention is called to the requirements for work under this item. The desired appearance to be attained in certain areas of heavy growth may require three or more operations. First, the obvious dead, dying and diseased trees and undergrowth shall be cut and cleared out of the area. This work includes removal of any previously fallen trees, branches, uprooted stumps and other debris as directed. Second, the area is to be thinned out, as directed, by removing the less desirable trees and brush which interfere with the growth of the better plant

material. Third, clear out lesser growth which may obscure outstanding trees, tree groups or scenic views.

Tree up-branching and shaping under this item will be restricted to trees which have limbs and branches restricting sight distance, extending over roadways, shoulders, turn outs, etc. Up-branching or trimming will be required to produce a 15-foot minimum vertical clearance over all locations described previously, and the removal of limbs and branches involved in this operation shall be accomplished as outlined hereafter. (See Section 10.7, Pruning.)

5.3.3 Disposal

All trees to be cleared shall become the property of the Contractor, and their satisfactory disposal shall become his responsibility.

The trees, including cuttings and slash shall be disposed after cutting as soon as practicable and in such a manner as not to detract from the appearance of the roadside.

If the existing ground in the area is disturbed by any of the work or equipment, the Contractor shall rough-grade and loam and seed as necessary the disturbed areas, if so directed by the Engineer, without additional compensation.

5.3.4 Measurement and Payment

Clearing and grubbing shall be measured by the horizontal plane area and will be the number of acres within the limiting stations of the project and/or as designated by the Engineer.

Measurement of selective clearing and thinning will be based on the actual number of acres which receive the required attention. Approximate locations will be shown on the plans or detail sheets and as designated in the field by the Engineer.

Only trees having a minimum diameter of at least 6 inches and less than 24 inches shall be included in the item of Trees Removed (Diameter under 24 Inches). Only trees having a minimum diameter of 24 inches or greater shall be included in the item of Trees Removed (Diameter 24 Inches and Over). The items listed as Tree Removed shall include the tree in its entirety, including its stump.

The item of Stumps Removed shall include the removal and satisfactory disposal of all tree stumps which remain in their original position and measure 6 inches or more in shortest diameter at the cutoff point, where the trees have been previously removed by others. A stump shall not be construed as a tree under these

specifications unless the trunk extends over 6 feet above the average ground around the base.

Trees or stumps to be removed which have the shortest diameter specified for payment will be measured in place by the following procedure:

Where the tree consists of a single trunk extending more than a 3 foot vertical height above the average natural ground line, the shortest diameter shall be measured at the 3 foot level above the average elevation of the original ground around the base.

Any tree whose main trunk separates into multiple leaders (trunks) or which has limbs or branches growing out from the main trunk below the 3 foot level defined hereinbefore shall have its shortest diameter measured at the lowest point on the main trunk where multiple growths or branching out begins.

The shortest diameter of a stump shall be measured at the cutoff except that where multiple growths begins below cutoff, the shortest diameter shall be measured at the main trunk where multiple growth begins.

Measurement for payment under the respective items shall be such that any individual growth to be classed as a tree stump shall be measured in a manner to limit payment to one single tree or stump at each particular location of the individual growth. When multiple leaders (trunks) with a common root system are separated at ground level each separate trunk (leader) shall be considered as an individual growth under these specifications.

The quantity of trees or stumps to be paid for will be the number actually removed by the Contractor in the completed and accepted work as determined by count.

Clearing and Grubbing and Selective Clearing and Thinning will be paid for at the contract unit price per acre.

When Clearing and Grubbing is not included in the Proposal as a payment item, payment for any such work will be included in the items of Common Excavation except as herein provided for the removal of trees and stumps. The removal of trees, including the stumps thereof will be paid for at the contract unit price each for the particular kind of work involved, as defined hereinbefore when a quantity is given in the Proposal under their respective items, otherwise this work will be paid for at the contract unit price for excavation or at the contract unit price per acre of Clearing and Grubbing or Selected Clearing and Thinning, whichever is applicable. The contract unit price shall include the cost of all arrangements and methods required to protect from harm all existing overhead or underground installations. Only qualified personnel shall be permitted to work in proximity to overhead

wires. The contract unit price for the respective items shall not include any trees or stumps removed from the area paid for under the item of Clearing and Grubbing or Selected Clearing and Thinning.

Payment Items

		Unit
5.3.4a	Clearing and Grubbing	Acre
5.3.4b	Selective Clearing and Thinning	Acre
5.3.4c	Tree Removed (Diameter under 24 inches)	Each
5.3.4d	Tree Removed (Diameter 24 Inches and Over)	Each
5.3.4e	Stump Removed	Each

5.4 EXCAVATION

5.4.1 General

This work shall consist of excavation and/or disposal of all materials not being removed under some other item which is encountered within the limits of the Contract in accordance with the specifications and in close conformity with the lines, grades, and cross sections shown on the plans or established by the Engineer. All excavation will be classified as "Common Excavation", "Class A Rock Excavation", "Topsoil Excavated and Stockpiled", or "Unclassified Excavation", as hereafter described. When required, the Contractor shall so prosecute his work that traffic will be maintained over and through the work with a maximum of safety and convenience in accordance with the provisions of Subsections 4.8, 4.9, 4.10 and 4.11 of Section 4 General Specifications.

The sequence of all excavation operations, earth, rock or backfill, shall be such as to insure the most efficient utilization of excavated materials into backfill or embankments (as specified in Subsections 5.6.3 and 5.6.4) and the use of a minimum amount of borrow. When the plans require excavation in areas in close proximity to existing roads, structures or utilities it shall be the responsibility of the Contractor at his expense to erect adequate supports, construct suitable drainage ditches or use other satisfactory means and methods to protect an maintain the stability of such roads, structures or utilities located immediately adjacent to but outside the limits of excavation.

All suitable materials obtained from the excavation or from the removal of present structures shall be used either in the formation of embankments, shoulders, slopes, loam or clay hardening, etc., or for backfill under, over, or around structures, pipe culverts or drains and at such other places as directed. The material shall be placed and compacted in a manner conforming to the specifications for the particular type of work required without additional compensation. It shall be the Contractor's

responsibility to obtain approval from the Engineer for the use and placing of various materials encountered in excavation.

Materials from all classes of excavation which are unsuitable, and any surplus of suitable materials remaining after completing the formation of embankments, shoulders, approaches, widening of roadway, embankment slopes or backfilling as directed, will be classified as waste and shall be disposed of by the Contractor offsite at his responsibility and expense, unless otherwise directed by the Engineer. Waste material shall not be disposed of in the flood channel areas of any stream.

No materials from the excavation, nor from construction, shall be deposited in flood plains nor within 100 feet of any body of water without compliance with the provisions of Chapter 131, Section of the Massachusetts Wetlands Protection Act. Written notification to the Engineer will be required wherein such filling has been authorized by the local Conservation Commission.

No excavated material shall be placed outside of and/or adjacent to a street right-of-way or easement without the written approval of the Engineer. The Contractor shall obtain written releases from property owners whose property is used as disposal or storage areas for material.

The Contractor shall construct sod or other adequate retaining banks around perimeters of the disposal areas outside the project to protect existing roads, stream channels, and adjoining properties (including underground water supplies) against the spread of, or contamination by the excavated material. Stream channels and ditches within and adjacent to the project shall be maintained in their present state or as specifically altered by the design of the project.

When temporary or existing roads are abandoned within the limits of roadway work and beyond the limits of the main roadway slopes, their surfaces shall be removed and graded and loamed for a neat and natural appearance for proper drainage of surface water, as directed.

5.4.2 Common Excavation

Common Excavation shall consist of all excavation not included as Class A Rock Excavation or excavation which is otherwise classified and paid for.

Unless otherwise provided for in the Contract, Common Excavation shall also include, as incidental to the general work, the removal and disposal of trash, signs, fences, guardrail, guide posts, bituminous concrete berms, castings (large and small) removed and not scheduled for reuse, and debris of every nature.

5.4.3 Class A Rock Excavation

Class A Rock Excavation shall consist of excavation and/or disposal of igneous, metamorphic or sedimentary rock and hardpan which cannot be excavated without blasting or the use of rippers. Class A Rock Excavation shall also consist of the excavation of all rock, stone, parts of stone, brick or cement concrete measuring one (1) cubic yard or more that requires blasting for removal.

No blasting is to be done without prior approval of the Engineer. A pre-blast survey of all surrounding buildings shall be conducted in accordance with 527 CMR 13.00 prior to the placement of any explosives. Under no circumstances shall the rock be covered with dirt or gravel as a means of containment for the blast. Blasting shall only be performed by a licensed contractor and only after a permit has been obtained from the Needham Fire Department. If drilling is done either for placement of explosives or to provide a line of fracture, the dust shall be controlled by one of the following methods:

1. Use of detergent tank
2. Use of water (spray or prewetting)
3. Use of vacuum collector

The method used shall be approved by the Engineer.

Attention is directed to MGL cl48 sl5 and s35 and 527 CMR 13.00

The Contractor shall keep on the job only that quantity of explosives that will be needed for the work underway and only during such time as they are being used. Explosives shall be stored in a secured manner and separately at a point over one hundred feet (100') distant from the blasting caps. When the need for explosives is ended, all such materials remaining on the work shall be promptly removed from the premises. In addition to observing all Municipal ordinances and State and Federal Laws relating to the transportation, storage, handling and use of explosives, the Contractor shall also conform to any further regulations which the Engineer may deem necessary in this respect.

In rock excavation, it is especially required that the blasting shall be conducted with all possible care so as to avoid injury to persons, other utilities and property; that the rock shall be well covered with mats as required; and that sufficient warning shall be given to all persons in the vicinity of the work before blasting; and, that care shall be taken to avoid injury to pipes or other structures. In rock excavation in tunneling, the Contractor shall exercise extreme care to avoid damage to the structure above the tunnel and shall keep the quantity of explosives used in any one charge to the absolute minimum.

Where rock, as defined in Subsection 5.4.3 Class A Rock Excavation of these specifications, is encountered, it shall be uncovered, but not excavated, until after measurements have been made by the Engineer. The quantity of rock excavation to be paid for shall be the number of cubic yards as measured in-place.

5.4.4 Topsoil Excavated and Stockpiled

This work shall consist of removing topsoil and stockpiling it where and as directed by the Engineer.

The topsoil shall be stockpiled neatly outside the limits of the proposed slopes within the project limits or may be temporarily stockpiled by the Contractor offsite for his own convenience, with the approval of the Engineer, in which case the Contractor shall be responsible for all arrangements and negotiations with the landowner. If the material stockpiled outside of the Right-of-Way is not available when needed for use on the project, the Contractor will furnish, at his expense, an equal volume of equal material meeting the requirements of Section 11.3.1.

If the temporary storage areas outside of the Right-of-Way require clearing and grubbing, the Contractor shall do such work without additional compensation.

The Contractor shall take reasonable care to avoid leaving any unsightly condition and to avoid unnecessary damage or injury to natural surroundings and roadside growth. The landscape shall be left in a satisfactory, neat and trim condition upon completion of the work.

5.4.5 Unclassified Excavation

This work shall consist of the excavation, removal and satisfactory disposal, in accordance with the provisions of Section 5.4.1, of all materials necessary for the construction of the proposed work as shown on the Plans or as directed, except those materials for which payment is specified under other items of the Contract.

5.4.6 Test Pits and Auger Borings

This work shall consist of excavating test pits and/or making auger borings for the purpose of obtaining, preserving and delivering soil samples acceptable to the Engineer when and if required, backfilling and thoroughly compacting in a manner acceptable to and to the extent required by the Engineer, and returning the ground surface back to its original condition. The maximum depth of test pits or borings shall be 12 feet.

The Engineer will establish the location and provide the ground surface elevation for each test pit or boring. No change in test pit or boring locations shall be made

unless prior written consent of the Engineer is obtained. The Contractor shall complete the test pits or borings to the specified highest bottom elevations or as otherwise directed by the Engineer. Test pits or borings are only to be excavated in the presence of the Engineer. No subsurface exploratory work shall be conducted in the Engineer's absence.

Test pits may also be excavated in order to determine the exact locations of underground utilities. Test pits for this purpose shall only be excavated with the approval of the Engineer and only during his presence.

The Contractor shall confine his operation as closely as possible to each location where work is to be performed. He shall take precautions necessary to prevent damage to existing structures, trees, utilities and conduits both above and below ground, and to lawns, walks and pavements and shall be responsible for any claims resulting from any damage to any of these items.

When test pits are required in locations where the Contractor must break through pavement, he shall make the smallest test pit necessary to meet required depths while maintaining all required safety precautions. Cuts made through pavements for test pits shall be made on a neat line by a jack hammer or saw. The cost of cutting and patching the pavement as required shall be included in the unit bid price for test pits.

5.4.7 Disposition of Excavated Materials

All suitable materials obtained from the excavation, or from the removal of present structures shall be used either in the formation of embankments, shoulders, slopes, or for backfill under, over, or around structures, pipes, culverts or drains or at such other places as directed and the material shall be placed and compacted in a manner conforming to the specification for the particular type of work required without additional compensation. It shall be the Contractor's responsibility to obtain the Engineer's approval for the use and placing of various materials encountered in excavation.

Materials from all classes of excavation which are unsuitable, and any surplus of suitable materials remaining after completing the formation of embankments, shoulders, approaches, widening of roadways or embankment slopes as directed, or backfilling, will be classified as waste and shall be disposed of by the Contractor outside the Right-of-Way at his responsibility and expense, unless otherwise directed. Waste material shall not be disposed of in the flood channel area of any stream.

All excavated materials, stockpiled on site, whether for reuse or awaiting removal for disposal, shall be placed in such a manner that traffic will not be impeded along

any open travel way, whether public or private, shall not be placed on private property except with written approval by the owner, and shall be provided with retaining banks or other means as necessary to prevent washout or drainage of materials into streams, drainage facilities or onto adjacent areas.

It is expressly understood that no excavated materials shall be removed from the site of the work or disposed of by the Contractor without the consent of the Engineer. Surplus material, approved by the Engineer as suitable for cover material, may be hauled to the Town Disposal Area, off Central Avenue at the Contractor's expense. All other material shall be disposed of by the Contractor at the Contractor's expense.

5.4.8 Unauthorized Excavation

The Contractor shall not make, cause to be made, suffer or allow any excavation not specifically required by these Contract Plans or Specifications or as directed by the Engineer. Any unauthorized excavation shall be immediately backfilled at the Contractor's sole cost and expense with the same material as was excavated or with gravel borrow as specified in Section 5.6.1, if the excavated material has been removed from the project site. No payment shall be made to the Contractor to remedy any unauthorized excavation.

5.4.9 Measurement and Payment

All classes of excavation except topsoil will be measured in their original position by the cross section method. Where such measurement is impracticable the volume shall be measured by such other methods as the Engineer may determine.

Payments will be made only for excavation to lines and grades as indicated on the plans or as directed by the Engineer.

Pay limits for rock excavation actually removed will be as follows:

1. For side slopes.
   (a) In excavation for side slopes up to a limit of 24 inches beyond and parallel to slope lines either shown on the plans or ordered in writing by the Engineer.
   (b) No allowance will be made for rock excavation beyond these specified lines in side slopes except that if ordinary borrow is required for the work and excess rock excavation is used in embankments such rock will be paid for as ordinary borrow.

2. Rock Excavation in curb and edging trenches not already paid for in previous rock excavation will be paid up to a width of 18 inches, providing rock extends to that width.

3. For area between side slopes.
   (a) In excavation to subgrade an allowance of a depth of 6 inches below subgrade lines.
   (b) In any other rock excavation an allowance of a depth of 6 inches below lines of proposed excavation.

Boulders which are to be included in the item for rock excavation will be measured at the point of removal, in the presence of the Engineer.

Topsoil excavation will be measured in its original position by measuring the surface area of topsoil to be removed and measuring the depth to be removed by test pits prior to removal, or by the cross section method as determined by the Engineer.

All classes of excavation will be paid for at the contract unit price per cubic yard of the particular type of excavation as defined hereinbefore except test pits and auger borings which will be paid per pit or boring excavated.

Payment Items

		Unit
5.4.9a	Common Excavation	Cubic Yard
5.4.9b	Class A Rock Excavation	Cubic Yard
5.4.9c	Topsoil Excavated and Stockpiled	Cubic Yard
5.4.9d	Unclassified Excavation	Cubic Yard
5.4.9e	Test Pits and Auger Borings	Each

5.5 TRENCH EXCAVATION

5.5.1 General

Excavation for culverts, pipes, utilities, masonry or foundation walls and other structures shall be made to the depth and lines indicated on the plans or established by the Engineer.

When required by the Engineer, the Contractor shall prosecute his work so that traffic will be maintained over and through the work area with a maximum of safety and convenience in accordance with the provisions of Sections 4.8, 4.9, 4.10 and 4.11.

The sequence of all excavation operations, earth or rock, shall be such as to insure the most efficient utilization of excavated materials as backfill (as specified in Section 5.5) and the use of a minimum amount of borrow. When the plans require excavation in or in close proximity to existing roads, structures and utilities it shall be the responsibility of the Contractor, at his expense, to construct suitable drainage ditches or use other satisfactory means and methods to protect and maintain the stability of such roads, and structures located immediately adjacent to but outside the limits of excavation.

The Contractor's attention is directed to the requirements of Section 5.2 Erosion & Siltation Control. The Contractor shall prosecute the work so as to prevent the ponding of water.

All suitable materials obtained from the excavation or from the removal of present structures shall be used either in the formation of embankments, shoulders, slopes, loam or clay hardening, etc., or for backfill under, over, or around structures, pipe, culverts or drains and at such other places as directed. The material shall be placed and compacted in a manner conforming to the specifications for the particular type of work required without additional compensation. It shall be the Contractor's responsibility to obtain the Engineer's approval for the use and placing of various materials encountered in excavation.

It shall be the Contractor's responsibility to properly dispose of material designated as unsuitable and any excavated material which is not required for the work, in approved disposal areas.

No materials from the excavation, nor from construction, shall be deposited in flood plains nor within 100 feet of any body of water without compliance under provisions of Chapter 131, Section 40 of the Massachusetts Wetlands Protection Act. Notification to the Engineer, in writing, will be required wherein such filling has been authorized by the local Conservation Commission.

No excavated material shall be placed outside of or adjacent to the work area or street without the written approval of the Engineer. The Contractor shall obtain written permission from property owners whose property is used as temporary and/or permanent storage or disposal areas for excavated material.

The Contractor shall construct sod or other adequate retaining banks, approved by the Engineer, around perimeters of the storage areas outside the project to protect existing roads, stream channels, and adjoining properties (including underground water supplies) against the spread of, or contamination by, the excavated material. Stream channels and ditches within and adjacent to the project shall be maintained as at present or as specifically altered by the design of the project.

All spoil shall be thoroughly stabilized by means of drains, wetting, covering with tarpaulins, proper grading, mulching, loaming and seeding as required to promote vegetation and to insure the areas will not be subject to erosion.

Where directed by the Engineer, earth, loam, or borrow of the kind required shall be used for grading outside of street rights-of-way and the surface shall be raked, smoothed and rolled. Excavation shall be made as directed on slopes or surfaces outside of and adjoining the location.

Trenches for pipes, cross drains or utilities shall be excavated to the required line and grade and shall be of sufficient width to permit thorough tamping of backfill material under the haunches. Soft or unsuitable material existing below the required bedding grade shall be removed as directed and replaced with sand, gravel, crushed stone or other suitable material and thoroughly compacted. Rock or boulders shall be removed below the bedding grade as specified in Subsection 5.5.4.

All materials excavated from trenches and subdrain trenches and not used in the backfill of the trench or used as part of an embankment, which are deemed to be suitable cover material by the Engineer, may be hauled to the Town Disposal Area at the Contractor's expense. All other material shall be disposed of by the Contractor at the Contractor's expense.

If cross pipes, conduits, drains or other unforeseen obstacles are encountered during the excavation, the proposed line and grade of the pipe may be altered, but only as directed by the Engineer.

When pipes, cross drains or utilities are to be installed in new embankments, the Contractor shall first construct and compact the embankment to an elevation at least 2 feet above the proposed facility and then excavate a trench in order to install the pipe, cross drain or utility in the new embankment.

When culverts, storm drains, sewer pipes, water mains, or any other utility including their appurtenances are to be installed in paved areas, the edges of the trench through the pavement shall be cut to a neat line, using an approved pavement breaker or power saw. Excavation equipment shall not be used to perform pavement cutting operations.

Cuts in pavement shall be parallel or perpendicular to the centerline of the trench. In the case of transverse or diagonal trenching, the pavement shall be sawn to provide a flat diamond shaped patch with a two (2) foot minimum overlap on undisturbed material that will permit only one wheel of a vehicle at a time to strike the patch area. Within the sawn limits of the final patch, the existing pavement and any temporary material shall be removed and replaced with a minimum of three

and one-half (3 1/2) inches, (two (2) inches of base and one and one-half (1 1/2) inches of top) of bituminous pavement laid and compacted to meet the existing pavement edge exactly.

In cases where multiple excavations are made in a paved area which would result in the edge of patches being closer than ten (10) feet to one another, the Engineer may require that the remaining pavement between trenches be removed and a continuous patch be provided.

5.5.2 Class A Trench Excavation

Unless otherwise shown on the plans, Class A Trench Excavation shall include the removal and satisfactory disposal of all materials to a maximum depth of five (5) feet, except Class B Rock Excavation, that are encountered in the construction or demolition of masonry culverts and other structures having a clear square span of less than 8 feet, masonry inlets, culvert ends, masonry walls, construction of drains or other utilities and in the construction widening, straightening or deepening of drainage ditches and water courses in connection with pipes or structures having a clear span of less than 8 feet.

Trench excavation in areas proposed to be graded to lower elevations shall be performed after grading to the lower elevations has been completed unless the Engineer orders in writing, that the trench excavation and its backfill shall be completed before the grading work is begun.

5.5.3 Class B Trench Excavation

Class B Trench Excavation shall include the removal and satisfactory disposal of all materials, except Class B Rock Excavation, encountered in the construction of drainage, sanitary sewer and water pipes greater than the 5 foot maximum depth specified in Section 5.5.2.

Trench excavation in areas proposed to be graded to lower elevations shall be performed after grading to the lower elevations has been completed unless the Engineer orders it in writing, that the trench excavation and its backfill shall be completed before the grading work is begun.

5.5.4 Class B Rock Excavation

This item shall include the removal and satisfactory disposal when encountered in the excavation for drainage structures, sanitary sewers, water pipes or other utilities, fences, highway guard, posts, bounds, pipes, ducts, walls and open trenches of:

(A) Boulders measuring 1 cubic yard or more and all solid rock that requires blasting or breaking by hand power tools (such as jackhammers, etc.) for removal.

(B) Masonry or concrete walls, covers and other portions of existing drainage structures, and plain and reinforced cement concrete pavements.

Removal operations shall be so prosecuted that no damage will be caused to adjacent structures or property.

No blasting is to be done without prior approval of the Engineer. A pre-blast survey of all surrounding buildings shall be conducted in accordance with 527 CMR 13.00 prior to the placement of any explosives. Under no circumstances shall the rock be covered with dirt or gravel as a means of containment for the blast. Blasting shall only be performed by a licensed contractor and only after a permit has been obtained from the Needham Fire Department. If drilling is done either for placement of explosives or to provide a line of fracture, the dust shall be controlled-by one of the following methods:

1. Use of detergent tank
2. Use of water (spray or prewetting)
3. Use of vacuum collector

The method used shall be approved by the Engineer.
Attention is directed to MGL cl48-sl5 and s35 and 527 CMR 13.00

The Contractor shall keep on the job only that quantity of explosives that will be needed for the work underway and only during such time as they are being used. Explosives shall be stored in a secured manner and separately at a point over one hundred feet (100') distant from the blasting caps. When the need for explosives is ended, all such materials remaining on the work shall be promptly removed from the premises. In addition to observing all Municipal ordinances and State and Federal Laws relating to the transportation, storage, handling and use of explosives, the Contractor shall also conform to any further regulations which the Engineer may deem necessary in this respect.

In rock excavation, it is especially required that the blasting shall be conducted with all possible care so as to avoid injury to persons, other utilities and property; that the rock shall be well covered with mats as required; and that sufficient warning shall be given to all persons in the vicinity of the work before blasting; and, that care shall be taken to avoid injury to pipes or other structures. In rock excavation in tunneling, the Contractor shall exercise extreme care to avoid damage to the structure above the tunnel and shall keep the quantity of explosives used in any one charge to the absolute minimum.

Where rock, as defined in Subsection 5.5.4 Class B Rock Excavation of these specifications, is encountered, it shall be uncovered, but not excavated, until after measurements have been made by the Engineer. The quantity of rock excavation to be paid for shall be the number of cubic yards as measured in-place.

5.5.5 Extent of Open Excavation

The longitudinal extent of any excavation shall be limited to that which can be completed and backfilled within the Contractor's working day or as limited by traffic control requirements. Otherwise, the extent of excavation open at any one time will be controlled by the conditions, but shall always be confined to the limits prescribed by the Engineer. Any excavations left open shall be properly signed and barricaded to protect the public. Such barricades and/or signage shall be removed only upon approval by the Engineer.

5.5.6 Excavation Near Existing Utilities and/or Structures

The locations of existing utilities, when shown on the Contract Plans, are approximate and their absence from the Contract Plans shall not be construed to imply their absence in the field. The Contractor shall be responsible for obtaining a Dig Safe permit number in accordance with MGL Ch. 82 s.40 and for notifying the Water and Sewer Division of the Needham Department of Public Works at least 72 hours in advance of the start of any excavation on the project.

As the excavation approaches pipes, conduits or other underground structures, digging by machinery shall be discontinued and the excavation shall be done by means of hand tools, as directed. Such manual excavation when incidental to normal excavation shall be included in the work to be done under items involving normal excavation.

Where determination of the exact location of a pipe or other underground structure is necessary for doing the work properly, the Contractor may be required to excavate test pits to determine such locations. When such test pits may be properly considered as incidental to other excavation, the Contractor shall receive no additional compensation, the work being understood to be included as a part of the excavation.

The Contractor shall not interfere with any existing facility without the written consent of the Town and/or the owner of the facility. If it becomes necessary to relocate an existing private facility, this shall be done by its owner. No facility owned by the Town shall be moved to accommodate the Contractor, unless specifically allowed by the Engineer in writing. The cost of moving Town facilities if allowed shall be borne entirely by the Contractor. The cost of moving privately

owned facilities shall be similarly borne by the Contractor unless other arrangements are made with the person owning the facility.

The Contractor shall support and protect, by the use of timbers, any pipes, conduits, poles, wires or other apparatus which may in any way be necessary to support, sustain and protect them whether under, over, along or across said excavation works. The Contractor shall secure approval of the method of support and protection from the owner of the facility. In case any of said pipes, conduits, poles, wires, or apparatus shall be damaged, and for this purpose, pipe coating-or other encasement or devises are to be considered as part of a structure, the Contractor shall promptly notify the owner thereof. All damaged facilities shall be repaired by the agency or person owning them and the expense of such repairs shall be charged to the Contractor. It is the intent of this paragraph that the Contractor shall assume all liability for damage to facilities and injury to persons. The only exception will be such instances where damage is exclusively due to the negligence of the owning company. The Town shall not be made a party to any action because of this paragraph. The Contractor shall inform himself as to the existence and location of all underground facilities and protect the same against damages.

The Contractor shall at all times, and at his own expense, preserve and protect from injury any adjacent property by providing proper foundations and lateral support, and by taking such other precautions as may be necessary for that purpose. The Contractor shall, at his own expense, shore up and protect buildings, trees, walls, property line markers, curbings, fences or other property likely to be damaged during the progress of excavation work and shall be responsible for all damage to public or private property or roadways resulting from his failure to properly protect and carry out said work. The Contractor shall not remove, even temporarily, any trees or shrubs which exist in planting strip areas, without first obtaining the consent of the Director of Public Works or his designee. (See Massachusetts General Laws, Chapter 87, Section 5 - Cutting Trees).

5.5.7 Drainage and Water Control

The Contractor shall provide and maintain temporary diversion channels, excavations, embankments, sheeting, drains, flumes, pumps and/or other effective procedures, with all labor, materials and equipment (including spare parts for immediate use in case of breakdowns) with which to intercept and/or promptly remove and properly dispose of all water entering trenches and/or other excavations and/or for dewatering trenches or foundation areas.

The Contractor shall use such equipment and perform his operations in such a manner that boiling or other disturbances of the ground in the foundation area will be prevented and shall keep dry the area being excavated by such means that will

prevent water from entering through or from adjacent ground, if such entering water could affect the stability of foundation material, the adjacent ground, or the foundation. Water shall be controlled by means of properly screened sumps or well points. When sumps are used, they shall be installed at strategic locations but not closer than three (3) feet from the finished work. Such excavations shall be kept dry until the pipes, appurtenances and/or structures have been completed to such an extent that they will not float or be otherwise disturbed or damaged.

All water pumped or drained from the work shall be disposed of in a suitable manner without undue interference with other work, damage to pavements, other surfaces or property. Suitable temporary pipes, flumes or channels shall be provided to control water that may flow along or across the site of the work. All work shall comply with Section 5.2 Erosion & Siltation Control.

Although the work specified in this Subsection shall be subject to the approval of the Engineer, such approval shall not relieve the Contractor of his responsibility for the adequacy of construction, maintenance, operation and safety of the water control system. Upon completion of the work, all temporary facilities for water control shall be removed.

At all times when a pipe is being tapped, is open or is being laid, the water level in the trench shall be kept below the bottom of the pipe or tubing.

5.5.8 Sheeting and Bracing and Trench Boxes

The Contractor shall furnish, put in place and maintain such sheeting, bracing, etc., as may be necessary to support the sides of the excavation and to prevent any movement of earth which could in any way undermine adjacent areas or diminish the width of the excavation to less than that necessary for proper construction, or could otherwise injure or delay the work, or endanger adjacent structures. If the Engineer is of the opinion that at any point sufficient or proper supports have not been provided, he may order additional supports put in at the expense of the contractor.

Trench boxes may be used at the discretion of the Contractor who shall assume all liability for their use. If trench boxes are used, they shall be used in accordance with their manufacturer's recommendations and shall not be used in areas beyond their rated capacities. All sheeting and bracing and trench boxes shall be built and/or used in compliance with OSHA requirements.

5.5.9 Cofferdams

Where the depth of excavation, protection of adjacent foundations and/or other requirements demand, the Contractor may be required and/or directed to install a sheetpile cofferdam. Where cofferdams are required for construction they shall be carried to adequate depths and heights, shall be safely designed and as watertight as necessary for the proper performance of the work which must be done inside them. Sheeting shall be driven to a sufficient depth below the proposed foundation grade to permit reasonable change in depth of the proposed foundation to a maximum of 2 feet except where solid rock is encountered. The interior dimensions shall be sufficient for the unobstructed and satisfactory completion of the construction work, inspection and pumping.

Upon request, the Contractor shall submit plans showing his proposed method of cofferdam construction to the Engineer for approval prior to the start of such construction. The furnishing of such plans and methods shall not serve to relieve the Contractor of any of his responsibility for the safety of the work or the responsibility for the successful completion of the work.

Cofferdams which become tilted or displaced during the process of the work shall be righted, reset or enlarged as may be necessary to provide the necessary clearances. This shall be at the sole expense of the Contractor. Cofferdams shall be dewatered and the proposed work placed in the dry. .

Cofferdams shall be constructed so as to protect the work against damage from a sudden rising of water and to prevent damage to the foundation by erosion. No part of the cofferdam shall be left in such a way as to extend into the finished work, without written permission of the Engineer.

Unless otherwise provided, all parts of the cofferdams shall be removed after the completion of the substructure, care being taken not to disturb or otherwise injure the finished work.

Sheetpiling used in the construction of cofferdams may be left in place at the option of the Contractor and agreed to by the Engineer, provided it is cut off at an elevation as may be directed by the Engineer, and the cutoff portions are removed from the site.

5.5.10 Measurement and Payment

All classes of trench excavation except as provided below shall be considered incidental to the particular type of work involved as specified elsewhere in this contract.

Class B Rock Excavation

Rock excavation shall be measured by in-situ volume in cubic yards. Where such measurement is impracticable, the volume shall be measured by such other means as the Engineer may direct. Payment will be made only for excavation to the lines and grades as indicated on the drawings or as specified herein. Limits for rock excavation actually removed will be as follows:

1. For side slopes.

    a. In excavation for side slopes up to a limit of 24 inches beyond and parallel to slope lines either shown on the plans or ordered in writing by the Engineer.

2. For area between side slopes.

    a. In excavation to subgrade an allowance of a depth of 6 inches below subgrade lines.
    b. In any other rock excavation an allowance of a depth of 6 inches below lines of proposed excavation.

Boulders which are to be included in the item for rock excavation will be measured at the point of removal.

Excavation Within Cofferdams

Excavation within a cofferdam, when specifically required by the Specifications and/or indicated on the drawings or when ordered by the Engineer, shall be included as a separate pay item, measurement of which shall be by volume in cubic yards of excavation actually performed within the dimensional limits of the cofferdam.

Payment Items

	Unit
5.5.10a Class B Rock Excavation	Cubic Yard
5.5.10b Excavation Within Cofferdams	Cubic Yard

5.6 BACKFILLING & COMPACTION

5.6.1 Backfill Materials

All backfill materials shall be approved by the Engineer prior to incorporation in the work. Materials may be approved at the source of manufacture or at the project site. Information regarding the origin, composition and/or manufacture of any material shall be furnished if requested by the Engineer.

Approval and acceptance of any material intended for use in the Contract is contingent upon the particular material conforming to a designated specification All soils and borrow materials shall conform to the requirements of these specifications.

Materials may be sampled and tested in accordance with the relevant provisions of current AASHTO standards or as otherwise specified in this Contract. The Engineer may require a certification from the source of supply in order to determine conformity with the designated specifications. The cost of any sampling, testing and/or certifications shall be at the expense of the Contractor.

Ordinary Borrow

Ordinary Borrow shall consist of a material satisfactory to the Engineer and not specified as gravel borrow, sand borrow, special borrow material or other particular kind of borrow.

This material shall have the physical characteristics of soils designated as group A-1, A-2-4 or A-3 under AASHTO-Ml45. It shall have properties such that it may be readily spread and compacted.
Ordinary Borrow shall meet the same requirements as specified in the Commonwealth of Massachusetts Department of Public Works Standard Specifications for Highways and Bridges, 1988, Section MI.01.0 (MDPW Specification Ml.01.0) except as noted above.

Gravel Borrow

Gravel Borrow shall consist of inert material that is hard, durable stone and coarse sand, free from loam and clay, surface coatings, organic and other deleterious materials.

Gradation requirements for gravel shall be determined by AASHTO-Tll and T27 and shall conform to the following:

Sieve Designation	Percent Passing
1/2 in.	50-85
No. 4	40-75
No. 50	8-28
No. 200	0-10

Maximum size of of stone gravel shall be as follows:

Type a	6 inches largest dimension
Type b	3 inches largest dimension
Type c	2 inches largest dimension

Gravel Borrow shall meet the same requirements as specified in MDPW Specification Ml.03.0 except as noted above.

Sand Borrow

Sand Borrow shall consist of clean inert, hard, durable grains of quartz or other hard durable rock, free from loam or clay, surface coatings, organic and deleterious materials. The-allowable amount of material passing a No.200 sieve as determined by AASHTO-Tll shall not exceed 10% by weight.

The maximum particle size for Sand Borrow shall be as follows:

Type a	1/4 in.
Type b	3/8 in.

Sand Borrow shall meet the same requirements as specified in MDPW Specification Ml.04.0 except as noted above.

Impervious Soil Borrow

Impervious Soil shall have the physical characteristics of one of the following, under AASHTO-Ml45:

1. A-4, A-5, A-6, A-7 soils;
2. A-2 soils containing more than 20% by weight passing the No. 200 sieve;
3. Peats and other highly organic soils.

The impervious Soil shall be reasonably free of stumps, brush, and stones larger than 3 in. diameter. Material excavated near salt water to be used as impervious soil will be tested for salt content. The maximum soluble salt index shall be 100.

Impervious Soil Borrow shall meet the same requirements as specified in MDPW Specification Ml.08.0 except as noted above.

Controlled Density Fill (Flowable Fill)

Controlled density fill (flowable fill) shall consist of a flowable, self consolidating, rigid setting, low density material that is composed of portland cement, fly ash (if very flowable), sand and water. There are four types of flowable fill:

Type 1	Very Flowable (Non Excavatable)
Type 1E	Very Flowable (Excavatable)
Type 2	Flowable (Non Excavatable)
Type 2E	Flowable (Excavatable)

The Very Flowable mixes (Types l and IE) shall contain a minimum of 250 lbs. of Class F fly ash and be self leveling.

Excavatable mixes (Types 1E and 2E) shall be hand tool excavatable.

Controlled density fill shall be batched at a "ready-mix" plant and shall be used at a high or very high slump. It shall be flowable and require no vibration after it has been placed.

A materials contents analysis or certified product specification shall be required with each load of flowable fill delivered to the project site.

Controlled density fill shall meet the same requirements as specified in MDPW Specification M4.08.0 except as noted above.

Dense Graded Crushed Stone

Dense graded crushed stone shall meet the standards and definition for gravel base course as defined in Subsection 5.8.2 of these specifications.

5.6.2 Backfilling Around Utilities and/or Structures

All backfilling around utilities and/or structures shall be conducted using the appropriate backfill material specified in the Section specifications for the particular structure involved. In general, and unless other material is indicated on the drawings or specified, material used for backfilling excavations around structures shall be suitable material approved by the Engineer which was removed in the course of making the construction excavations.

Prior to placing binder on compacted base in the travelway and after adjusting small castings as defined by these specifications the contractor shall excavate to a depth of 12 inches base material around castings and backfill with dense graded crushed stone and compact material to equal density of surrounding pavement subbase or base course.

Frozen material shall not be placed in the backfill nor shall backfill be placed upon frozen material. Previously frozen material shall be removed or shall be otherwise treated as required, before new backfill is placed.

As soon as practicable after pipes have been laid and assembled, the Contractor shall construct a firm, even bearing along the length of pipe by tamping the appropriate bedding material specified in the Section Specifications for the particular utility involved up to the spring line. The Contractor shall make sure that no cavities exist in the bedding, or exist around and/or against the pipe. Care shall be taken, to assure compaction of the material under the edges of the pipe to its bottom surfaces. The backfilling shall then continue using the specified bedding materials to at least six (6) inches above the top of the pipe. The Contractor shall take particular care to assure that his tamping or rodding procedures do not damage the pipe in any way. No backfill shall be placed on or against structures until permitted by the Engineer. The Contractor shall not place backfill against structures until they have attained sufficient strength to support the loads (including construction loads) to which they will be subjected, without distortion, cracking or other damage. Backfilling shall be started and then shall proceed until its completion. Unless otherwise specified, the best of the excavated materials shall be used in backfilling within 2 feet of the structure. Unequal soil pressures shall be avoided by depositing the material evenly around the structure. The backfill material shall be placed in successive layers not more than 12" inches in loose depth, uniformly distributed and each layer thoroughly compacted. The Contractor shall make sure that no cavities in the backfill exist around or against the structure. Backfill shall be placed and compacted using tampers or mechanical ramming tools weighing not less than 20 lbs. The Contractor shall insure that no damage (for this purpose, any protective coating or other encasement or devices are to be considered as part of the structure) occurs to the structure during the backfilling or compaction process.

5.6.3 Backfilling Trenches

Immediately after the bedding has been placed and compacted around the pipes, the trench shall be backfilled with excavated material acceptable to the Engineer or with gravel borrow type a if the material that was excavated is not acceptable, as specified in Section 5.6.1.

The backfill shall be uniformly placed in 12 inch lifts and each lift shall be compacted to not less than 95 percent dry density within 5% of optimum moisture content using mechanical tampers, vibratory compactors or other means approved by the Engineer. The Contractor shall, without additional compensation, employ whatever measures may be necessary to adjust the natural water content of the suitable backfill material to permit the placement and compaction as specified above. If, in the opinion of the Engineer, the backfill is not being properly compacted, the Engineer may order that compaction tests be conducted in accordance with AASHTO Standard Method of Test T99 Method C at optimum moisture content by an outside geotechnical engineering company or other method approved by the Engineer at the Contractor's sole cost and expense. Should the

initial tests indicate that the backfill was compacted as specified, the Contractor shall be reimbursed for the cost of the test. If, however, initial testing indicates that the backfill was not compacted to the requirements specified above, the Contractor shall receive no reimbursement for the initial testing and shall bear all costs involved with maintaining the services of the testing company until testing indicates that the backfill has been compacted in accordance with these specifications.

Frozen material shall not be placed in the backfill nor shall backfill be placed upon frozen material. Previously frozen material shall be removed or shall be otherwise treated as required, before new backfill is placed.

Once backfilling commences, the work shall proceed in a continuous I manner with diligence and expedience up to the required subgrade elevation.

In special circumstances indicated by the Engineer, or as specifically indicated on the plans, controlled density fill as specified in Section 5.6.1 may be used as backfill material in trenches. The controlled density fill (flowable fill) material shall extend only to the limits specified by the Engineer or as indicated on the plans. Controlled density fill shall be poured in 4 ft. maximum lifts and allowed to set for a minimum of 12 hours before proceeding with subsequent lifts.

5.6.4 Embankment Construction

Construction of all fill areas shall be done in accordance with the relevant provisions of Sections 5.5, 5.6 and 5.7 and in accordance with the procedures described herein. This work comprises the formation of embankments with suitable material obtained-from excavation and/or borrow, thoroughly compacted to produce a stabilized embankment. The work shall be performed in accordance with the lines and grades shown on the plans as directed.

Material available from widened cuts outside the slopes as indicated on the plans or as ordered by the Engineer may be used in embankments or elsewhere upon written request by the Contractor and subsequent written approval by the Engineer. The Engineer shall determine the suitability of any excavated material for incorporation in the embankment.

If the Contractor desires to waste excavated material and provide borrow to replace it for his own convenience, he may do so only after obtaining the written approval of the Engineer and after satisfactory arrangements have been made for the measurements and disposal of the excavated material.

When it is determined by the Engineer that there is insufficient material available, either from excavation within the Right-of-Way or the slope lines of the section

under Contract, for the formation of embankments, roadbeds in cut sections, shoulders, or backfill the Contractor shall obtain such additional material as may be necessary from outside the location. This material shall be considered borrow material and shall meet the appropriate requirements specified in Section 5.6.1.

All embankment materials, whether taken from excavation or borrow shall consist of solid, sound mineral aggregate. They shall be free from deleterious, organic, plastic or foreign matter and shall be adequately graded for satisfactory compaction into a stabilized soil structure.

These materials will be classified into particular groups according to AASHTO Designation M 145, "The Classification of Soils and Soil Aggregate Mixtures for Highway Construction Purposes".

All borrow material to be furnished shall meet the requirements specified in Subsection 5.6.1 for Ordinary Borrow, Gravel Borrow, Sand Borrow and Impervious Soil Borrow.

Prior to starting work, the Contractor shall obtain approval for the compaction equipment to be used. Unless otherwise required on the Contract Plans, each layer of embankment material shall be thoroughly compacted with power rollers or tamping equipment. Other equipment of equivalent compactive capacity may be used subject to trial on the project and approval by the Engineer. Compacting equipment will not be used for any other purpose during compaction operations.

Tractors, trucks, scrapers or similar other equipment designed primarily for purposes other than compaction shall not be used as compaction equipment, but their traffic over the fill shall be distributed in such a manner as to take advantage of the additional compaction effort afforded thereby.

Sufficient leveling and compacting equipment shall be provided to do the work of spreading and compacting the material promptly after it has been deposited. When, in the Engineer's judgment, such equipment is inadequate to spread and compact the material properly, the Contractor shall employ additional equipment or reduce the rate of excavation and placing of the fill to a rate not to exceed the capacity of the leveling and compacting equipment or employ additional equipment.

Before the placement of any fill, the areas under embankments shall be cleared, grubbed, and stripped as specified in Section 5.3 and 5.4.

Frozen material shall not be placed in embankments nor shall embankment be placed on frozen material. If during the construction of an embankment, the top layer becomes frozen to a depth of over 3 inches, the frozen material shall be

removed before a succeeding-layer is placed on the embankment. This work shall be performed at no additional expense to the Owner.

Frozen excavated material which will be suitable when dry shall be allowed to thaw and dry and then be placed in the embankment. No compensation will be allowed for the storing and rehandling of these materials.

Embankments shall be formed by placing successive layers of material uniformly distributed and compacted over the full width of the cross section unless otherwise directed. Stumps, rubbish, sod, frozen or other unsuitable materials as determined by the Engineer shall not be incorporated in the embankment.

The Contractor shall prosecute his work so that no damage will occur to underground utilities or structures.

Embankments shall be placed and compacted in uniform layers not exceeding 12 inches in depth, loose measurement, and each layer of material shall be spread on the entire width of the embankment and leveled off by approved equipment.

The embankment materials shall be compacted to not less than 95 percent of the maximum dry density of the embankment material as determined by AASHTO Standard Method of Test T99, Method C within 5% of optimum moisture content or other method approved by the Engineer. The Contractor shall, without additional compensation, employ whatever measures may be necessary to adjust the natural water content of the suitable embankment material to permit the placement and compaction as specified. The Engineer, during the progress of the work, may make tests as required, determining the in-place density of the soil by one of the following Standard Methods of Test: Density of Soil and Soil Aggregate in place by Nuclear Methods (Shallow Depth), AASHTO T238; Density of Soil In-Place by the Sand-Cone Method, AASHTO T191; or Density of Soil In-Place by the Rubber-Balloon Method, T205.

Each lift of compacted materials shall be visibly crowned to allow drainage of surface and rain waters the surface of the embankment.

The work may be ordered to be suspended if the weather and climatic conditions are such that the embankment and excavation work cannot be performed in accordance with the specifications. No additional compensation will be allowed to the Contractor for such suspension of work. If the work is ordered suspended due to weather or other climatic conditions not under the control of the Contractor, an extension of time may be granted to the Contractor by the Engineer.

5.6.5 Water Jetting and Puddling

Water-jetting and/or puddling shall not be permitted unless prior written approval has been granted by the Engineer. In instances where such approval is granted, and the backfill material is compacted by water-jetting, the Contractor shall provide a suitable length of pipe not less than 1.25 inches in diameter fitted with a quick-acting valve and sufficient fire hose to connect to a hydrant or pump having adequate pressure and capacity. The full depth of backfill material shall then be thoroughly inundated by thrusting the pipe into the soil with the valve open at frequent intervals along the trench until all slumping ceases. Where backfill material is compacted by puddling, it shall be done by depositing the materials in water.

5.6.6 Measurement and Payment

Backfilling and compaction except as provided below shall be considered incidental to the particular type of work involved as specified elsewhere in this contract.

Backfill Materials, as listed in Section 5.6.1, shall be measured by the actual volume placed and compacted in accordance with these specifications in cubic yards. No overhead allowance will be made for any kind of borrow materials.

Embankment construction using excavated material shall be measured and paid for at the contract unit price for Ordinary Borrow.

Payment Items

		Unit
5.6.6a	Ordinary Borrow	Cubic Yard
5.6.6b	Gravel Borrow (Type B)	Cubic Yard
5.6.6c	Gravel Borrow (Type C)	Cubic Yard
5.6.6d	Sand Borrow	Cubic Yard
5.6.6e	Impervious Soil Borrow	Cubic Yard
5.6.6f	Controlled Density Fill (Flowable Fill)	Cubic Yard
5.6.6g	Dense Graded Crushed Stone	Cubic Yard

5.7 GRADING AND COMPACTION

5.7.1 General

The shaping, trimming, compacting and finishing of the surface of the subgrade, the grading and finishing of all unpaved shoulders and slopes, and the preparation of all areas for topsoil, loam, riprap or slope paving as shown on the plans or as

directed, shall be constructed in accordance with these specifications and in close conformance with the lines, grades and typical cross sections shown on the plans or established by the Engineer.

All soft or highly organic material below the subgrade shall be removed to a depth to be determined by the Engineer and backfilled with satisfactory material.

All material within a depth of 2 feet below the subgrade in embankment (fill) areas shall conform to the requirements of Subsection 5.6.1 Gravel Borrow Material Type a and shall be placed and compacted in layers not exceeding 12 inches in depth in accordance with Subsection 5.6.4.

In cut sections (excluding rock excavation) where existing soil within a depth of 2 feet below the subgrade, after testing, is found to comply with the requirements of Subsection 5.6.1 for Gravel Borrow Material, it shall not be excavated.

In cut sections (excluding rock excavation) where the existing soil within a depth of 2 feet below the subgrade, after testing for gradation requirements, is found to have greater than 14% material passing the #200 mesh, the material shall be excavated to a depth of two (2) feet and replaced with Gravel Borrow material, type a as specified in Section 5.6.1.

The replacement material shall conform to the requirements of Subsection 5.6.1 for Gravel Borrow Material Type a and shall be placed in layers not exceeding 12 inches in depth and compacted in accordance with Section 5.6.4.

In the areas described above where Gravel Borrow is to be used, the plane of the base (subgrade) upon which the material is to be placed shall be compacted and graded until the surface is smooth, without additional compensation. A tolerance of 1 inch above or below the proposed grade will be allowed, provided that this I inch above or below grade is not maintained for a distance longer than 50 feet and that the required crown is maintained.

5.7.2 Fine Grading and Compacting

Before surfacing material or sub-base is spread, the subgrade shall be shaped to a true surface conforming to the proposed cross section of the roadway and compacted in accordance with the provisions of Subsection 5.6.4. All depressions and high spots shall be filled with suitable material or removed and such areas again compacted until the surface is smooth and satisfactorily compacted. A

tolerance of 1/2 inch above or below the finished subgrade will be allowed provided that this 1/2 inch above or below grade is not maintained for a distance longer than 50 feet and that the required crown is maintained in the subgrade. Any portion of the subgrade which is not accessible to a roller shall be thoroughly compacted with mechanical tampers or by other adequate methods approved as satisfactory by the Engineer.

5.7.3 Measurement and Payment

The grading and compaction of the subgrade will be measured by the square yard at the horizontal plane at the bottom of subgrade in all areas where a subgrade was placed.

Grading and finishing for the entire project will include all grading work not included under the item of Fine Grading and Compacting (in subgrade area).

Payment for the shaping and compacting of the subgrade as specified herein shall be included in the item for Fine Grading and Compacting (in subgrade area). The removal and disposal of material below subgrade will be paid for at the contract unit price per cubic yard for the appropriate Excavation Items in Section 5.4.9.

Grading and finishing other than subgrade areas will be included in the price of the other respective items of work involved.

In areas where Gravel Borrow material is required as stipulated in Subsection 5.6.1, the material shall be paid for as Gravel Borrow. The provisions of Subsection 5.6.4 shall apply when the Gravel Borrow is used.

Payment Items

	Unit
5.7.3a Fine Grading and Compacting - Subgrade areas	Square Yard

5.8 PAVEMENT REPLACEMENT

5.8.1 General

The Contractor shall provide all labor, materials, equipment and incidentals required for replacement of the pavement system removed by excavation as specified in Sections 5.4 and 5.5. The pavement system shall consist of the gravel

sub-base course, gravel base course, pavement binder course and pavement top course as hereinafter specified. Each course shall consist of the approved material placed and compacted in accordance with these specifications in close conformity with the lines, grades and typical cross sections shown on the contract plans or established by the Engineer and all joints shall be painted with asphalt emulsion and sanded.

5.8.2 Sub-base and Base Requirements

The gravel sub-base course shall consist of Gravel Borrow, Type c as specified in Section 5.6.1 and shall be placed on the graded and compacted Subgrade (see Section 5.7).

The gravel sub-base shall be spread and compacted in one layer, 8 inches in depth compacted measurement, to not less than 95 percent of the maximum dry density of the material as determined by the Standard AASHTO Test Designation T99 compaction test Method C within 5% of optimum moisture content as determined by the Engineer. If the material retained on the #4 sieve is 50% or more of the total sample this test shall not apply and the material shall be compacted to the satisfaction of the Engineer. The specific. density of the Gravel Sub-base shall be maintained by determining the number of passes of a roller or plate compactor required to produce a constant and uniform density, after conducting a series of tests either using the sand/volume or the nuclear density testing device.

Any stone with a dimension greater than 2 inches shall be removed from the sub-base before the gravel is compacted. Compaction shall continue until the surface is even and true to the proposed lines and grades within a tolerance of 1/2 inch above or below the required cross sectional elevations and to a maximum irregularity not exceeding 1/2 inch under a 10 foot line longitudinally. Any specific area a gravel sub-base which, after being rolled, does not form a satisfactory, solid, stable foundation shall be removed, replaced and recompacted by the Contractor without additional compensation.

The gravel base course shall consist of coarse aggregates of crushed stone or gravel and fine aggregates of natural sand or stone screenings uniformly pre-mixed with a predetermined quantity of water and placed on the sub-base in close conformity with the lines and grades shown on the contract plans or established by the Engineer.

The quality and gradation requirements for the gravel base course are as follows:

Coarse aggregate shall consist of hard, durable particles of fragments of stone. Materials that break up when alternately frozen and thawed or wetted and dried shall not be used.

Coarse aggregate shall have a percentage of wear, by the Los Angeles Abrasion Test (AASTO-T-96) of not more than 45.

Fine aggregate shall consist of natural or processed sand.
The composite material shall be free from clay, loam or other cohesive soil, and shall conform to the following grading requirements:

Sieve Designation	Percentage by Weight Passing Square Mesh Sieves
2 in.	100
1 1/2 in.	70-100
3/4 in.	50-85
No. 4	30-55
No. 50	8-24
No. 200	3-10

Sampling and testing shall be in accordance with the following standard AASHTO methods:

Sieve Analysis	T27
Passing No. 200 Sieve	T11

The gravel base course shall be spread and compacted in one layer, 4 inches in compacted depth, to the same tolerances specified above for the gravel sub-base.

The gravel base course material shall meet the same requirements as specified in MDPW Specification M2.01.7 except as noted above.

5.8.3 Pavement Binder and Top Course

The pavement binder course shall be composed of mineral aggregate, mineral filler and bituminous material.. The binder course shall be constructed in one 2 inch layer, compacted thickness, as shown on the contract plans or shall be constructed to match the existing pavement thickness less 1 1/2 inches whichever is greater as directed by the Engineer. The binder shall be spread and compacted on the prepared or existing gravel base in accordance with these specifications and in close conformity with the lines, grades, compacted thickness and typical cross section shown on the contract plans or as directed by the Engineer.
The pavement binder course shall be constructed in accordance with Section 420 of the MDPW Specifications. The pavement binder shall be Class I Bituminous Concrete Base Course, Type 1-1 "Binder Course" as specified above.

The pavement top course shall be constructed in accordance with Section 460 of the MDPW Specifications. The top course shall be constructed in one 1 1/2 inch layer, compacted thickness, of Class I Bituminous Concrete Pavement, Type I-1 "Top Course" as specified above.

The Engineer may require the Contractor to remove and replace at the Contractor's own expense, any defective mix not conforming to these specifications or contract plans. The Engineer may, at his discretion, require that laboratory tests be performed to assure compliance with material composition or compaction specifications. The Engineer's decision to remove defective mix will be based on the results of said testing which shall be conducted in accordance with the relevant portion of Section 400 of the Commonwealth of Massachusetts Department of Public Works Standard Specifications for Highways and Bridges, 1988 (MDPW Specifications) except as herein specified. The costs for such tests shall be borne by the Contractor.

5.8.4 Sidewalk Areas and Driveways

Sidewalk areas and driveways shall consist of an 8 inch gravel sub-base as specified in SubSection 5.8.2 and a 2 inch pavement binder and a 1 inch top course as specified in Subsection 5.8.3.

Gravel for the sub-base and base courses shall be measured by the amount of cubic yards of compacted material in place. Payment for shaping and compacting of the Sub-base and base as specified herein shall be included in the item of gravel borrow.

Pavement binder and top courses shall be measured by the ton and shall be the actual and verified tonnage, complete in place and approved. The quantity shall be determined only by weight slips that have been properly counter signed by the Engineer at the time of delivery.

5.8.5 Measurement and Payment

The pavement replacement course shall be measured by the unit in ton or cubic yard and shall be the actual and verified tonnage, measured complete in place and compacted. For units in Tons the quantity shall be determined only by weight slips that have been properly counter-signed by the Engineer at the time of delivery. Payment will include removal and disposal of any asphalt not coved by any other payment item.

Payment Items

	Unit
5.8.5a Pavement Replacement - Gravel Sub-Base Course	Cubic Yard
5.8.5b Pavement Replacement - Gravel Base Course	Cubic Yard
5.8.5c Pavement Replacement - Binder Course	Ton
5.8.5d Pavement Replacement - Top Course	Ton

5.9 RESURFACING VEGETATED AREAS

5.91 Plantable Borrow Materials

Plantable borrow materials shall consist of the following:

Topsoil and Plantable Soil Borrow

Topsoil and Plantable Soil Borrow shall consist of fertile, friable, natural topsoil, reasonably free of stumps, roots, stiff clay, clods of soil or vegetation larger than 2 inches in diameter, stones larger than 1 inch diameter, noxious weeds, sticks, brush or other litter.

Prior to stripping the topsoil from the construction project, it shall have demonstrated by the occurrence upon it of healthy crops, grass or other vegetative growth, that is reasonably well drained and capable of supporting plant growth. Material classified as Topsoil can only be obtained within the project limits.

Topsoil and Plantable Soil Borrow shall meet the same requirements as specified in MDPQ Specification 1.07.0 except as noted above.

Loam Borrow

Loam Borrow shall consist of a fertile, friable, natural topsoil typical of the locality, without admixture of subsoil, refuse or other foreign materials, and shall be obtained from a well-drained arable site. It shall be such a mixture of sand, silt and clay particles as to exhibit sandy and clayey properties in approximately equal proportions. It shall be reasonably free of stumps, roots, heavy or stiff clay, stones larger than 1 inch in diameter, lumps, coarse sand, noxious weeds, sticks, brush or other litter.

Prior to stripping, the loam shall have demonstrated by the occurrence upon it of healthy crops, grass or other vegetative growth that it is reasonably well drained that it does not contain toxic amounts of either acid or alkaline elements.

The loam shall contain not less that 4% nor more than 20% organic matter as determined by the loss on ignition of oven-dried samples. Test samples shall be oven-dried to a constant weight at a temperature of 230 ° F.

Loam Borrow shall meet the same requirements as specified in MDPW Specification M1.05.- except as noted above.

Compost

Compost shall consist of a fertile mixture of decomposed organic matter reasonably free of stumps, roots, stones, sticks, brush, litter or other non-decomposed matter. Material classified as Compost can only be obtained from the Town's Recycling and Transfer Station (RTS) facility.

5.9.2 Placing Plantable Materials

Plantable borrow materials shall be placed and spread on the prepared subgrade in one 4 inch layer compacted measurement. The material shall be compacted by the use of concrete or water-filled roller or other equipment satisfactory to the Engineer. The final compacted elevations shall conform to the lines, grades, and typical cross sections shown on the contract plans.

5.9.3 Seeding

After the plantable borrow material areas have been prepared as described aove, grass seed as hereinafter specified shall be carefully sown thereon at the rate of 1 pound 75 square yards. No seed shall be sown without the approval of the Engineer.

Grass seed shall be of the previous year's crop and in no case shall the weed seed content exceed 1% by weight. The grass seed shall conform to the requirement of the following tables:

	Proportion	Germination Minimum	Purity Minimum
For Grassplots & Islands			
Creeping Red Fescue	50%	85%	95%
Kentucky Blue	25%	85%	90%
Domestic Rye	10%	90%	98%

Red Top	10%	85%	92%
Ladino Clover	5%	85%	96%

	Proportion	Germination Minimum	Purity Minimum
For Grassplots & Islands			
Creeping Red Fescue	50%	85%	95%
Kentucky 31	30%	85%	95%
Domestic Rye	10%	90%	98%
Red Top	5%	85%	92%
Ladino Clover	5%	85%	96%

5.9.3 (Cont.)

The seed shall be furnished and delivered premixed in the proportions specified above. All seed shall comply with the State and Federal Seed laws.

The seed mixture specified for slopes and shoulders consists of a tough hardy type for use on slopes graded at the rate of 4:1, and steeper slopes, and on shoulders adjacent to the roadway pavement or as otherwise directed. The mixture for grass plots is of a finer type which will produce finer turf.

5.9.4 Fertilizer and Herbicide Application

Fertilizers, soil enhancers, lime, weed killers and other applications used to promote growth of certain desirable grasses or plants shall be used when and where directed by the Engineer. Application of the specific product shall be in accordance with its manufacturer's recommendations.

5.9.5 Sodding

This work shall consist of the construction of lawn areas with field sod as indicated on the plans, or as designated by the Engineer, and in accordance with these specifications.

A foundation for the lawn and field sod shall be constructed as specified in Subsection 5.9.2 and it shall consist of loam borrow, plantable soil borrow or topsoil rehandled and spread in quantities sufficient to produce, after rolling or tamping, a depth of at least 4 inches. Fresh sods shall then be placed in final position on the areas designed for sodding. Sods shall be placed in a solid or strip pattern as designed on the plans or as directed by the Engineer. The sods shall be laid edge to edge (butted) with staggered joints. All sods shall be very carefully handled, to prevent loosening and separation of the loam from the roots. The

combined thickness of the so and loam shall be at least 6 inches. The sod shall be settled by watering it and tamping on a board laid over it. When the sod shall be set in final position, loam shall be used to fill the joints completely and as a surface dressing to cover the sodded areas to a depth of about ¼ of an inch. The outside edges (perimeter) of the sodded area shall be embedded in loam sufficiently so that no exposed edges exist.

When the sods are to be placed in temporary storage piles, and they are in the form of separate flat slabs instead of folds or rolls, they shall be placed in layers so that the grassy side of the first or bottom layer shall be uppermost, whereas in the next succeeding layer the roots shall be uppermost, and so on in such a manner as to place the grass roots of each succeeding layer in immediate contact with the corresponding surface of the preceding layer, in order to avoid rapid growth of the grass while in storage. The piles shall be sprinkled with water and covered with burlap, straw or other acceptable material which shall be kept moist when required and as directed. As a rule, temporary storage will not be permitted for a period longer than 5 days. The sod shall not be stored in such a manner to compress the

thickness of sod below the minimum required. Sods which have been stored beyond the time limit and sods which have become dried out or broken prior to placement in final position on the designated areas shall be rejected bye the Engineer.

The contractor shall be responsible for the necessary watering of sodded areas and shall supply all labor and equipment to accomplish said watering at his or her own expense.

If necessary, suitable signs and barricades of brush or other materials shall be placed to protect the sodded areas.

Before acceptance of the work, a satisfactory uniform stand of grass and new root growth will be required.

The contractor shall maintain all of the sodded areas until the work has been officially accepted, without additional compensation above the amount regularly to be paid under this item as hereinafter provided. Maintenance shall include all reseeding or resodding which may be necessary, as determined by the Engineer.

5.9.6 Hydro-Seeding

A hydraulic spray machine, approved by the Engineer, and designed specifically for seed dissemination shall be utilized. The application of limestone as necessary, fertilizer and grass seed may be accomplished in one operation by the use of an approved spraying machine. The materials shall be mixed with water in the

machine and kept in an agitated state in order that the materials may be uniformly suspended in the water. The spraying equipment shall be so designed that when the solution is sprayed over an area the resulting deposits of limestone, fertilizer and grass seed shall be equal in quantity to those quantities specified in Subsections 5.9.3 and 5.9.4 and uniformly spread over the area.

The contractor shall be responsible for the watering of all hydro-seeded areas which shall be kept moist. The Engineer's decision will prevail in the event of a dispute develops with the Contractor as to whether or not the hydro-seeded areas on which growth has started shall be watered to assure continuing growth. Watering shall be done in a manner which will provide uniform coverage, prevent erosion due to application of excessive quantities over small areas, and prevent damage to the finished surface by the watering equipment. The contractor shall furnish sufficient watering equipment to apply one complete coverage to the seeded areas in an 8 hour period.

If necessary, suitable signs and barricades of brush or other materials shall be placed to protect the seeded areas.

After the grass has appeared, all areas and parts of areas which fail to show a uniform stand of grass, for an reason whatsoever, shall be hydro-seeded again and

such areas and parts of areas shall be hydro-seeded repeatedly until all areas are covered with a satisfactory stand of grass acceptable to the Engineer.

The contractor shall care for all of the hydro-seeded areas until the work has been accepted by the Engineer without additional compensation. Care shall include all regrading, refertilizing, hydro-seeding, watering and mowing which may be necessary.

Prior to the acceptance of the project the Contractor will be responsible for mowing the grass when necessary to maintain a maximum height of 3 inches after a stable turf has been established in the Engineer's judgement.

A satisfactory stand of grass, as determined by the Engineer, shall be required. To be acceptable, a stand of grass shall consist of a uniform stand of at least 60 % established permanent grass species, with a uniform count of at least 100 plants per square foot.

5.9.7 Measurement and Payment

The quantity of previously stockpiled topsoil shall be measured in place after compacting to the specified depth. Payment shall be made at the contract unit price per cubic yard complete in place and shall include all labor, materials and

equipment necessary to separate existing vegetation from the topsoil and spread and compact the topsoil in conformance with the specifications stipulated in Subsection 5.9.1 and 5.9.2.

Plantable soil borrow, and loam borrow shall be measured in place after compaction. Payment shall be made at the contract unit price per cubic yard complete in place and shall include all labor materials and equipment necessary to do the work in conformance with the specifications stipulated in Subsection 5.9.1 and 5.9.2

Compost from the Town's Recycling and Transfer Station (RTS) facility shall be measured in place after compaction. Payment shall be made at the contract unit price per cubic yard complete in place and shall include all labor, materials and equipment necessary to load the compost at the RTS facility, deliver it to the job site and spread and compact it in conformance with the specifications stipulated in Subsection 5.9.1 and 5.9.2.

Seeding shall be measured in place after a uniform stand of grass satisfactory to the Engineer has appeared. Payment shall be made at the contract unit price per square yard of area approved as acceptable by the Engineer and shall include all labor, materials and equipment necessary to sow the seed in conformance with Subsection 5.9.3, re-apply seed as necessary and maintain the sown areas until accepted by the Engineer.

Fertilizer and herbicide application measurement shall be based on the actual number of square yards which receive the required application. Payement shall be made at the contract unit price per square and shall include all labor materials and equipment necessary to perform the work in conformance with the specifications stipulated in Subsection 5.9.4.

Sodding shall be measured in place after acceptance by the Engineer. Payment shall be made at the contract unit price per square yard and shall include all labor, materials and equipment to perform and maintain the work in conformance with Subsection 5.9.5 of these specifications.
Hydro-seeding shall be measured in place after acceptance by the Engineer. Payment shall be made at the contract unit price per square yard and shall include all labor, materials and equipment to perform and maintain the work in conformance with the specification stipulated in Subsection 5.9.6.

Payment Items

		Unit
5.9.7a	Topsoil Rehandled and Spread	Cubic Yard
5.9.7b	Plantable Soil Borrow	Cubic Yard
5.9.7c	Loam Borrow	Cubic Yard

5.9.7d	Compost Handled and Spread	Cubic Yard
5.9.7e	Seeding	Square Yard
5.9.7f	Fertilizer and Herbicide Application	Square Yard
5.9.7g	Sodding	Square Yard
5.9.7h	Hydro-Seeding	Square Yard

5.10 PROTECTION, CLEAN-UP AND RESTORATION

5.10.1 Protection of Existing Property

During the course of the work, the Contractor shall enclose the trunks of trees adjacent to this work with substantial wooden boxes of such height as is required to protect them from injury from piled material or from equipment or from his operations, or otherwise due to his work. Steam-operated equipment shall not be used. Excavating machinery and cranes shall be handled with care to prevent damage to trees, particularly to overhanging branches and limbs. Branches, limbs and roots shall not be cut except by permission of the Engineer. Any cutting shall be smoothly and neatly done without splitting or crushing. In case of cutting or unavoidable damage to branches, limbs and trunks of trees, the cut or damaged portions shall be neatly trimmed and treated as directed.

On paved surfaces the Contractor shall not use or operate tractors, bulldozers or other dozer-operated equipment having treads or wheels which are so shaped as to cut or otherwise damage such surfaces. Any surfaces which have been damaged by the Contractor's operations shall be restored to the condition at least equal to that in which they are found immediately prior to the beginning of operations. Suitable materials and methods as determined by the Engineer shall be used for such restoration.

5.10.2 Clean-Up and Removal

During its progress, the work and the adjacent areas affected there by, shall be kept in a neat, clean and trim condition. All unnecessary construction equipment shall be removed and all damage occurring as a result of the construction work shall be repaired, including grass plots, so that the public and adjacent property owners will be inconvenienced as little as possible.

After an excavation has commenced, the work shall proceed in a continuous manner with diligence and expediency and shall be completed and the street restored, as nearly as possible to its original condition, so as not to obstruct the public places or travel thereon more than is reasonably necessary.

As the work progresses, all streets shall be thoroughly cleaned of all rubbish, excess earth, rock and other debris resulting from such work. All material

excavated from trenches, and piled adjacent to the excavated trench in any street, shall be piled and maintained in such a manner as not to endanger those working in the trench, pedestrians, or users of the street, and so that as little inconvenience as possible is caused to those using the street from adjoining properties. Whenever necessary, in order to expedite the flow of traffic or to abate the dirt or dust nuisance, two boards or bins may be required by the Town to prevent the spreading of dirt into traffic lanes. Where the confines of the area being excavated

5.10.2 (Cont.)

are too narrow to permit the piling of excavated material beside the trench, the Engineer shall have the authority to require-that the Contractor haul the excavated material to a storage site and then rehaul it to the trench site at the time of backfilling at the Contractor's expense.

It shall be the Contractor's responsibility to secure the necessary permission and make all necessary arrangements for all required storage and disposal sites.

Where material or debris has washed or flowed into or has been placed in watercourses, ditches, gutters, drains, catchbasins or elsewhere as a result of the Contractor's operations, such materials or debris shall be entirely removed and satisfactorily disposed of during progress of the work and the ditches, channels, drains, etc., kept in a clean and neat condition.

Dust control shall be provided as necessary to prevent a nuisance to abutters and surrounding areas. Dust control shall be by wetting or use of calcium chloride or other methods approved by the Engineer.

On or before the completion of the work, the Contractor shall, unless otherwise specifically directed or permitted in writing, tear down and remove all temporary buildings and structures built by the Contractor; shall remove all temporary works, tools and machines or other construction equipment furnished by him; shall remove and acceptably disinfect and cover all organic matter and material containing organic matter in, under and around privies, houses and other buildings used by him; shall remove all rubbish from any grounds of other buildings used by him; shall remove all rubbish from any grounds which he has occupied; and shall leave the roads and all parts of the premises and adjacent property affected by his operations in a neat and satisfactory condition.

5.10.3 Restoration of Damaged Property

The Contractor shall restore or replace, when and as directed, any public or private property damaged by his work, equipment or employees, to a condition equal to that which existed immediately prior to the beginning of operations. To this end the Contractor shall do as required all necessary highway or driveway, walk and

landscaping work. Suitable materials, equipment and methods as determined by the Engineer shall be used for such restoration. Tree lawns and lawns shall be restored to their original condition.

All work under this section shall be considered incidental to the normal progress of the Contract with no additional compensation there for.

SECTION 6 WATER CONTRACT SPECIFICATIONS

6.1 CEMENT LINED DUCTILE IRON (CLDI) PIPE

6.1.1 General

The Contractor shall make all earth excavations, provide all materials, lay, joint and connect all ductile-iron water pipe and fittings and cast-iron fittings at the locations and elevations shown on the contract plans, construct concrete thrust blocks, backfill, compact, maintain the backfilled trench, dispose of all excess materials and do all appurtenant work in accordance with these specifications and as shown on the contract plans or as directed by the Engineer.

6.1.2 Inspection and Acceptance of Pipe

The Contractor shall submit to the Engineer for approval within ten (10) days after execution of the Contract, a list of materials to be furnished, the names of suppliers and the date of delivery of materials to the sites. Where American National Standards Institute (ANSI) Standards are referenced, it shall be understood that reference to American Water Works Association (AWWA) Standards are both inferred and implied where joint ANSI/AWWA Standards exist.

Ductile-iron pipe shall be fabricated in accordance with the requirements of ANSI Standard A21.51.86 for "Ductile-Iron Pipe, Centrifugally Cast in metal molds or Sandlined Molds, for Water or Other Liquids", approved as standard, with the following qualifications:

1. Joints shall be push-on.

2. Pipe thickness shall be Class 52.

3. Certification shall be provided by the manufacturer as described in Section 51-5.2.

4. The outside coating shall be asphaltic as described in Section 51-9.1.

5. The inside lining shall be cement-mortar as described in Section 51-9.2.

Ductile-iron pipe shall have push-on type joints except where pipe is to be joined with specials, fittings, or valves, in which case ductile-iron pipe shall be furnished with mechanical joint ends. Both types of joints as required, shall be furnished as specified under this section.

The gasketed and bolted joint, or mechanical joint, shall be as detailed in the American Standard A21.11-85, except the nominal thickness of the bells shall not

be less than the nominal wall thickness of the pipe. Pipe restraint shall be "megalug" or equivalent.

Each ductile-iron pipe shall have conspicuously painted on the outside, the pressure class and weight of the pipe.

Manufacturer's Affidavit of Factory Inspection and Testing: Adequate quality control and manufacturing inspection shall be provided by the Contractor's manufacturer to assure that all push-on type, ductile iron pipe is fabricated in strict accordance with the applicable provisions of the ANSI Standards. The Contractor shall furnish a sworn affidavit of compliance that all hydrostatic and physical properties tests have been made and that the results of same comply with ANSI requirements.

6.1.3 Installing CLDI Pipe

Care shall be taken in loading, transporting and unloading to prevent injury to the pipes or coatings. Pipe or fittings shall not be dropped. All pipe or fittings shall be examined before laying and no piece shall be installed which is found to be defective. Any damage to the pipe coatings shall be repaired as directed by the Engineer.

If any pipe is damaged after it has been laid, it shall be removed and replaced with a sound pipe in accordance with these specifications by the Contractor at his expense. All pipe and fittings shall be thoroughly cleaned before laying, shall be kept clean until used in the completed work, and when laid shall conform to the lines and grades required.

Ductile-iron pipe and fittings shall be installed in accordance with the requirements of AWWA Standard Specification C600-87 except as otherwise provided herein. A firm, even bearing throughout the length of the pipe shall be constructed by tamping selected material at the sides of the pipe up to the springline. A minimum of five (5) feet of cover shall be maintained and blocking will not be permitted. Pipe shall not have more than six (6) feet of cover unless approved by the Engineer.

All pipe shall be sound and clean before laying. When laying is not in progress, including lunch time, the open ends of the pipe shall be closed by watertight plug or other approved means. Good alignment shall be preserved in laying. The deflection at joints shall not exceed that recommended by the manufacturer. Fittings, in addition to those shown on the drawings, shall be provided, if required, in crossing utilities, which may be encountered upon opening the trench. Solid sleeves shall be used only where approved by the Engineer.

When cutting of pipe is required, the cutting shall be done by saw leaving a smooth cut at right angles to the axis of the pipe. Cut ends of pipe to be used with a push-on bell shall be beveled to conform to the manufactured spigot end. Cement lining shall be undamaged.

Excavations and backfill for the pipe shall be made in accordance with Section 5.5 and 5.6 Earthwork Specifications.

6.1.4 Pipe Jointing Requirements (Push-on Type)

Push-on joints shall be made in strict accordance with the manufacturer's instructions. Pipe shall be laid with bell ends looking ahead. A rubber gasket shall be inserted in the groove of the bell end of the pipe, and the joint surfaces cleaned and lubricated with an approved lubricant. The plain pipe to be entered shall then be inserted in alignment with the bell of the pipe to which it is to be joined, and pushed home with a jack or by other means. After jointing the pipe, a metal feeler shall be used to make certain that the rubber gasket is correctly located.

6.1.5 Pipe Fittings

Fittings shall conform to the requirements of ANSI Standard A21.10-87, for "Ductile-Iron and Gray-Iron Fittings, 3 Inches through 48 Inches, for Water and Other Liquids", for fittings with bell and spigot joints, mechanical joints and flange joints and the dimensions and weights shown on the tables contained in ANSI Standard A21.10. As an alternative, mechanical joint fittings may conform to ANSI Standard A21.53.88 for "Ductile-Iron Compact Fittings, 3 Inches through 16 Inches for Water and Other Liquids". The mechanical joint shall also conform in all respects to ANSI Standard A21.11-85 for "Rubber Gasket Joints for Ductile-Iron and Gray-Iron Pressure Pipe and Fittings". Flanged fittings shall conform to Table 10.14 of ANSI Standard A21.10.

Fittings shall be cast from gray iron. All cast-iron fittings shall be Class 250 and shall have mechanical joint ends.

The inside surfaces of all fittings shall receive a cement-mortar lining and asphaltic seal coat as described in ANSI A21.10.

Adequate quality control and manufacturing inspection shall be provided by the Contractor's manufacturer to assure that all pipe fittings are fabricated in strict accordance with the applicable provisions of ANSI Standards. The Contractor shall furnish a sworn affidavit of compliance that inspection and all specified acceptance tests have been made and that the results of same comply with the ANSI requirements.

6.1.6 Jointing Mechanical Joint Fittings

Mechanical joints at valves, fittings and where designated shall be in accordance with the Appendix A of ANSI Specification A21.11-85 and the instructions of the manufacturer. To assemble the joints in the field, the Contractor shall thoroughly clean the joint surfaces and rubber gasket with soapy water before tightening the bolts. Bolts shall be tight to the specified torque's. Under no condition shall extension wrenches or pipe over handle or ordinary ratchet wrench be used to secure greater leverage.

6.1.7 Furnishing and Placing Plain Concrete

The Contractor shall furnish, deliver and place plain concrete for anchorage at fittings and at other locations where directed by the Engineer.

Concrete shall be of a mix not leaner than one (1) part cement, 2 parts sand and 4 parts stone, and having a compressive strength of not less than 3,000 pounds per square inch at 28 days. Unless otherwise permitted by the Engineer, concrete shall be provided from an approved plant and any such concrete shall be subject to cylinder tests at the expense of the Contractor, if requested by the Engineer.

All plugs, caps, tees and bends, deflecting 11-1/4 degrees or more shall be provided with a reaction backing of plain concrete.

Concrete shall be placed between solid ground and the fitting to be anchored, and the area of bearing on the pipe and on the ground shall be as shown or directed by the Engineer. The backing shall, unless otherwise directed by the Engineer, be so placed that the pipe and fitting joints will be accessible for repair.

6.1.8 Insulation

Where the ductile iron pipe is constructed with less than five feet of cover, the Contractor shall insulate the pipe and install insulation board above the pipe as shown on the plans. The insulation around the ductile iron pipe shall be 2-inch thick polysocyanurate with vapor barrier.

Trymer 2000 as manufactured by Dow Chemical Company or an approved equal shall be used for insulating ductile iron pipes where required. The thickness shall be 2 inches as shown on the drawings. Vapor barrier to be Saran 560 as manufactured by Dow Chemical or approved equal.

Approved equal products from other manufacturers shall be Extruded-Polystyrene Board Insulation formed from polystyrene base resin by an extrusion process using hydrochlorofluorocarbons as blowing agent to comply with ASTM C578, Type IV, with 1.60 pounds per cubic foot minimum density and a compressive strength

of 25 pounds per inch as specified in ASTM D1622 and ASTM D1621 respectively. The maximum thermal conductivity of the insulation shall conform with ASTM C518, C177, and C578. The maximum water absorption percentage by volume shall be one percent in accordance with ASTM D2842. The range of water vapor permanence shall be 0.4 to 1.0 perm in accordance with ASTM E96.

6.1.9 Measurement and Payment

Measurement and payment for providing water pipe and fittings shall be based on the unit bid price per linear foot and shall be measured along the top center line of the pipe including valves and fittings. Payment shall include all materials, labor, tools and equipment to remove the pavement (where necessary), sawcutting, excavate the trench, provide trench drainage (pumping), install bedding materials, lay and joint the pipe and fittings, cut the pipe to meet required lengths, connect new water mains with existing mains, cutting existing mains as required by the Engineer, plug and/or cap new or existing mains, disconnect the old main to be abandoned, disconnect and reconnect lateral mains, safeguard and protect other utilities, backfill, compact, dispose of excess materials and maintain the backfilled area in accordance with these specifications and as shown on the contract plans or as directed by the Engineer. Payment shall include the testing of fire services before and after installation.

Payment Items

Furnish and Install cement Lined Ductile-Iron Pipe and Cast-Iron Fittings as follows:

		Unit
6.1.9a	20" Diameter Pipe	Linear Foot
6.1.9b	16" Diameter Pipe	Linear Foot
6.1.9c	14" Diameter Pipe	Linear Foot
6.1.9d	12" Diameter Pipe	Linear Foot
6.1.9e	8" Diameter Pipe	Linear Foot
6.1.9f	6" Diameter Pipe	Linear Foot
6.1.9g	4" Diameter Pipe	Linear Foot
6.1.9h	Pipe Insulation All Sizes	Linear Foot
6.1.9i	Cap Main, All Sizes	Each

6.2 TAPPING SLEEVES AND VALVES

6.2.1 General

The Contractor shall make all earth excavations, provide all materials, labor, tools and equipment required to provide tapping sleeves and valves complete and in place, backfill, compact, dispose of all excess materials and do all appurtenant

work in accordance with these specifications and as shown on the contract plans or as directed by the Engineer.

6.2.2 Tapping Sleeves and Gate Valves

Valves shall conform to the requirements for gate valves as specified in Section 6.3, except as modified for passage of tapping machine cutters. The hub ends shall be designed for mechanical joints. Valves shall be set in accordance with the provisions of this Section.

Sleeves shall be of cast-iron, designed for working pressures not less than 200 psi and have gaskets that fully encircle the pipe.

Each tapping sleeve and valve shall be accompanied by a heavy duty cast iron valve box as specified in Section 6.3.4.

6.2.3 Installing Tapping Sleeves and Valves

Prior to ordering tapping sleeves and valves, the Contractor shall determine the exact location, elevation and dimensions of the existing main(s) to be tapped.

Installation shall be made under pressure, maintaining the flow of water in the existing mains at all times. The existing main shall be thoroughly cleaned around the entire circumference of the main to the full length of the sleeve plus eight (8) inches. All scaling and debris shall be removed using a metal file. The Contractor shall be responsible to ensure a tight seal exists between the existing pipe and the sleeve. Before backfilling, all exposed portions of any bolts used to hold the two halves of the sleeve together shall be heavily coated with two coats of bituminous paint comparable to Inertol No. 66 Special Heavy. The entire operation shall be conducted by workmen thoroughly experienced in the installation of tapping sleeves and valves.

No visible leakage will be permitted after the valve and sleeve are installed and prior to backfill.

6.2.4 Measurement and Payment

Furnishing and payment for providing tapping sleeves with gate valves and boxes should be based on the unit bid price per unit stated in the proposal.

Payment shall include all materials, labor, tools and equipment to remove the pavement (where necessary), excavate the trench, provide trench drainage (pumping), install bedding materials, provide tapping sleeves with gate valves and boxes complete and in place, make all taps and cuts, make all assemblies of sleeves and gate valves, construct thrust blocks as directed by the Engineer, maintain uninterrupted flow in the existing water main(s) without loss of water, backfill,

compact, dispose of excess materials and maintain the backfilled area in accordance with these specifications and as shown on the contract plans or as directed by the Engineer.

Payment Items

		Unit
6.2.4a	Furnish and Install 8 inch by 8 inch tapping sleeve with 8 inch gate valve and box	Each
6.2.4b	Furnish and Install 12 inch by 8 inch tapping sleeve with 8 inch gate valve and box	Each

6.3 VALVES

6.3.1 General

The Contractor shall make all earth excavations, furnish and install valves, valve boxes and appurtenant work, backfill, compact, dispose of all excess materials and maintain the backfilled area in accordance with these specifications and as shown on the contract plans, or as directed by the Engineer.

6.3.2 Gate Valves

Gate valves shall be as manufactured by the Mueller Company, American Darling Valve and Manufacturing Company or approved equal and shall conform to Standard Specification AWWA C515, with the following additional requirements:

1. Non-rising stems.
2. Mechanical joint ends.
3. O-ring stem seal.
4. Open in a clockwise direction.

6.3.3 Wedge Valves

Wedge valves shall conform to AWWA C509-87, Standard for Resilient Seated Gate Valves. Wedges shall be constructed of ductile iron, fully encapsulated in synthetic rubber except for guide and wedge nut areas. Wedge rubber shall be molded in place and bonded to the ductile iron portion, and shall not be mechanically attached with screws, rivets, or similar fasteners. Wedges shall seat against seating surfaces arranged symmetrically about the centerline of the operating stem, so that seating is equally effective regardless of direction of pressure unbalance across the wedge. Stems shall be sealed by at least two O-Rings; all stem seals shall be replaceable with valve wide open and while subjected to full rated pressure. Waterways shall be smooth and shall have no depressions or cavities in seat area when foreign material can lodge and prevent closure or

sealing. Valve bodies and bonnets shall be coated, inside and out, with fusion-bonded epoxy. Coatings shall conform to AWWA C550-81, Standard for Protective Interior Coatings for Valves and Hydrants.

6.3.4 Valve Boxes

Each valve shall be furnished with a heavy duty valve box of the two piece, adjustable, Buffalo type with 5 1/2 inch diameter shaft, top section at least 26 inches long and bottom section 36 inches long, making a minimum overall extended length of 66 inches. If deeper main burial requires a longer upper section for the top to be at finished grade, it shall be supplied as necessary. Cast-iron covers with the word "WATER" cast on the upper surface shall be included with each top section. The cover as installed shall be flush with the finished grade. The valve box shall be set perpendicular to the plane of the roadway surface over the length of the box and shall be centered over the operating nut so that the centerline of the lower part of the valve box is not more than 1/2 inch off the centerline of the valve stem.

Replacement of valve boxes shall included the removal of existing valve boxes, and the furnishing and installing of new valve boxes. The new boxes shall installed in the same location as the existing boxes, and they shall be set to the proposed roadway grade.

6.3.5 Measurement and Payment

Measurement and payment for providing valves and valve boxes, as well as removing valve boxes, shall be based on the unit bid price per unit stated in the proposal. Payment shall include all materials, labor, tools and equipment to remove the pavement (where necessary), excavate the trench, provide trench drainage (pumping), provide valves and valve boxes complete and in place including all appurtenant work, backfill, compact, dispose of excess materials and maintain the backfilled area in accordance with these specifications and as shown on the contract plans, or as directed by the Engineer.

Payment Items

		Unit
6.3.5a	Provide 16 inch valves and boxes	Each
6.3.5b	Provide 12 inch valves and boxes	Each
6.3.5c	Provide 8 inch valves and boxes	Each
6.3.5d	Provide 6 inch valves and boxes	Each
6.3.5e	Provide 4 inch valves and boxes	Each
6.3.5f	Replace valve boxes	Each
6.3.5g	Abandon Valve in Place	Each
6.3.5h	8 inch insertion valve	Each

6.4 FIRE HYDRANTS

6.4.1 General

The Contractor shall make all earth excavations, provide new fire hydrants including the 6 inch pipe hydrant connection, hydrant tee, and all appurtenant work, construct concrete thrust blocks, backfill, compact, dispose of excess materials and maintain the backfilled area in accordance with these specifications and as shown on the contract plans, or as directed by the Engineer.

6.4.2 Installing Hydrants

Hydrants shall be as manufactured by Mueller Company, Super Centurian 200 Model A-423 or approved equal and equipped with a National Standard operating nut and a National Standard nozzle thread. Hydrants shall be equipped 5-1/4 main valve opening three way, with two 2-1/2 hose nozzles and one 4-1/2 pumper nozzle and shall be designed for 78 inch burial, unless otherwise approved by the Engineer.

Hydrants shall be of the compression type for 150 pound service having a minimum valve opening of 5 inches and shall have a break-away flange and 6 inch mechanical joint inlet. **Hydrants will be painted Yellow with a white bonnet and shall open clockwise. Hydrants will be outfitted with 5' fiberglass Red/White Reflective Hydrant marker with Red mini Flag attached by bolt on a flat Bracket with spring.**
Before ordering the hydrants, the Contractor shall submit the name of manufacturer and type of hydrants to the Engineer for approval. The hydrant shall be installed at least 24 inches and no more than 30 inches from the edge of the traveled way (gutter) and shall not obstruct any part of a sidewalk. The bottom of the hydrant shall be placed on a minimum eight (8) inch thick layer of compacted 3/4 inch to 1 112 inch crushed stone. The hydrant shall be set within 1/4 inch in 2 feet of plumb, and thrust blocks shall be provided for both the hydrant tee and hydrant base. The six (6) inch valve shall be at least 24 inches from the edge of the traveled way.

6.4.3 Installing Thrust Blocks

The Contractor shall furnish and install plain concrete for anchorage of hydrants.

Concrete shall be of a mix not leaner than one part cement, 2 parts sand and 4 parts stone, and having a compressive strength of not less than 3,000 pounds per square inch at 28 days. Unless otherwise permitted by the Engineer, concrete shall be provided from an approved plant and any such concrete shall be subject to cylinder tests at the expense of the Contractor, if requested by the Engineer.

The bowl of each hydrant shall be well braced with concrete backing against unexcavated earth at the end of the trench. The backing shall, unless otherwise directed by the Engineer, be so placed that the pipe and fitting joints will be accessible for repair.

6.4.4 Measurement and Payment

Measurement and payment for providing fire hydrants shall be based on the unit bid price per unit stated in the proposal.

Payment shall include all materials, labor, tools and equipment to remove the pavement (where necessary), excavate the trench, provide trench drainage (pumping), provide bedding materials, provide the crushed stone base, provide the fire hydrant complete and in place, including the six (6) inch connecting CLDI water pipe and all appurtenant work, provide the hydrant tee, provide thrust blocks and restraining glands, hydrant extensions to bring to grade, backfill, compact, dispose of excess materials and maintain the backfilled area in accordance with these specifications and as shown on the contract plans, or as directed by the Engineer.

Payment Items

	Unit
6.4.4a Provide new fire hydrant and appurtenant work	Each

6.5 REMOVAL OF EXISTING HYDRANTS

6.5.1 General

The Contractor shall make all earth excavations, remove the existing fire hydrant(s) indicated on the contract plans, remove the existing six (6) inch connecting pipe, remove the valve and valve box, cap the existing tee on the abandoned main, cut and remove sections of the abandoned main, cap and/or plug all openings in the abandoned main, deliver the existing hydrant, valve and valve box to the Needham Department of Public Works stock yard, backfill, compact, dispose of excess materials and maintain the backfilled area in accordance with these specifications and as shown on the contract plans, or as directed by the Engineer.

6.5.2 Hydrant Removal

Hydrants shall only be removed after the proposed hydrant(s) have been put into service and the existing water main has been disconnected from the Town's water distribution system, or as directed by the Engineer. Pavement removal and trench excavation shall be conducted in accordance with Section 5.5 of these

specifications. Backfill, compaction and grading shall be conducted in accordance with Sections 5.6 and 5.7.

The Contractor shall remove the hydrant and its appurtenances, including the riser pipe and hydrant base, the six (6) inch connecting pipe, the six (6) inch valve and the valve box with its cover. If a six (6) inch connecting pipe exists between the water main tee and the valve, it shall also be removed by the Contractor. The Contractor shall cap the existing tee and cap or plug all openings in the abandoned main as specified in Section 6.6.2 prior to backfilling.

The Contractor shall replace the pavement system as specified in Section 5.8 after the trench excavation has been backfilled. The Contractor shall reset all granite or reinforced concrete curbing disturbed during the hydrant removal process in accordance with these specifications, and bituminous curb or berm shall be replaced as directed by the Engineer.

The shoulder and/or sidewalk area shall be returned to their original condition as determined by the Engineer. The Contractor shall strip the existing topsoil (the top four (4) inch soil layer) from the shoulder area prior to excavating the trench and stockpile it for reuse, or shall replace the topsoil layer with new material meeting Sections 5.9.1 and 5.9.2 at his expense. The Contractor shall seed the surface of the disturbed area in accordance with Section 5.9.3 after the existing or replaced topsoil layer has been installed and compacted.

6.5.3 Measurement and Payment

Measurement and payment for removing existing hydrants, including all appurtenant work and delivery, shall be based on the unit bid price per hydrant removed. Payment shall include all labor, materials, tools and equipment, remove the pavement (where necessary), excavate the trench, provide trench drainage (pumping), remove the existing hydrant(s), remove the existing six (6) inch connecting pipe, remove the valve and valve box, cap the existing tee on the abandoned main, cut and remove sections of the abandoned main, cap and/or plug all openings in the abandoned main, deliver the existing hydrant, valve and valve box to the Needham Department of Public Works stock yard, backfill, compact, dispose of excess materials and maintain the backfilled area in accordance with these specifications and as shown on the contract plans, or as directed by the Engineer.

Payment Items

	Unit
6.5.3a Remove existing hydrant and appurtenant work	Each

6.6 TRANSFER HOUSE CONNECTIONS

6.6.1 General

The Contractor shall make all earth excavations, provide all labor, materials, tools and equipment to disconnect existing water service laterals from the existing water main to be abandoned and reconnect them to new corporation stops provided in the new main, backfill, compact, dispose of all excess materials and maintain the backfilled area in accordance with these specifications and as shown on the contract plans, or as directed by the Engineer.

6.6.2 Transfer House Connections

Where water service laterals are to be connected to the proposed main by shortening their existing length, the water service lateral shall be transferred. After the proposed water main has been installed and put into service, the Contractor shall transfer existing one (1) inch or greater copper water service laterals from the existing main to new corporation stops provided on the proposed main. All new corporations, except as noted below, shall be dry-tapped into the proposed main during the construction of the main and their locations marked with paint on the edge of the trench prior to backfilling the main. Taps shall be made at the ten O'clock or two o'clock positions on the pipe cross-section and shall be made perpendicular to the tangent surface plane on the pipe barrel. Taps shall be made after the pipe has been lowered into the trench and before the pipe has been connected to the work. Water service laterals which are two (2) inches or greater in diameter shall be made using a saddle connection as manufactured by the Mueller Company, Model No. H-15008, or approved equal. Corporation stops shall be Mueller Model No. 110 and shall have one end compression and the other Mueller thread. The Contractor shall cut the existing service to allow for an eight (8) inch gooseneck to be formed prior to the corporation connection. All scaling or tuberculation shall be removed from the service lateral pipe surface prior to making the pipe cut. The cut shall be made using a C-clamp pipe cutter of appropriate size and shall be made perpendicular to the longitudinal axis of the service. The Contractor shall de-burr the end of the lateral with a metal file and shall clean its surface with an emery cloth for a distance of one and one-half (1-1/2) inches from the end prior to connecting the lateral to the corporation stop.

6.6.3 Measurement and Payment

Measurement and payment for transferring existing house connections shall be based on the unit bid price per water service transferred. Payment shall include all labor, materials, tools and equipment, to remove the pavement (where necessary), excavate the trench, provide trench drainage (pumping), transfer the existing lateral to the proposed main, provide a corporation stop on the proposed main during construction of the main, provide all location marks, fittings, incidentals and

all appurtenant work, backfill, compact, dispose of all excess materials and maintain the backfilled trench in accordance with these specifications and as shown on the contract plans, or as directed by the Engineer.

Payment Items

	Unit
6.6.3a Transfer water service lateral	Each

6.7 RENEW HOUSE CONNECTIONS

6.7.1 General

The Contractor shall make all earth excavations, provide all labor, materials, tools and equipment to disconnect existing water service laterals from the existing water main to be abandoned, remove the laterals from the existing curb stops to the existing corporation stops, remove the existing curb stops and boxes, provide new curb stops and boxes, provide new laterals from the curb stops to new corporations provided in the proposed main, backfill, compact, dispose of all excess materials and maintain the backfilled area in accordance with these specifications and as shown on the contract plans, or as directed by the Engineer.

6.7.2 Renew House Connections

Where water service laterals are to be connected to the proposed main by extending their existing length, where laterals are smaller than one (1) inch diameter, or where laterals are made of a material other than Type K copper tubing, the water service lateral shall be renewed.
After the proposed water main has been installed and put into service, the Contractor shall renew existing:

(1) Water service laterals smaller than one inch diameter by replacing the existing service with a minimum size one (1) inch Type K lateral from the existing curb stop to new corporation stops provided during construction of the proposed main. Unions are not permitted. Existing laterals which are found to have existing unions in their length shall be renewed.

(2) Water service laterals where laterals are made of a lead material by replacing the existing lead service with a minimum size one (1) inch Type K lateral from the existing water meter inside the house (or building) to new corporation stops provided during construction of the proposed main. Unions are not permitted. Existing laterals which are found to have existing unions in their length shall be renewed.

All new corporations, except as noted below, shall be dry-tapped into the proposed main during construction of the main and their locations marked with paint on the edge of the trench prior to backfilling the main. Taps shall be made at the ten o'clock or two

o'clock positions on the pipe cross-section and shall be made perpendicular to the tangent surface plane on the pipe barrel. Taps shall be made after the pipe has been lowered into the trench and before the pipe has been connected to the work. Water service laterals which are two (2) inches or greater diameter shall be made using a saddle connection. The renewed water service lateral shall be made of Type K copper tubing and shall have a two (2) foot gooseneck prior to the corporation stop. All excavation, backfill and compaction shall be conducted in accordance with Section 5.5 and 5.6 of these specifications.

6.7.3 Tubing

Tubing furnished for the connections shall be Type K Copper Tubing.

6.7.4 Fittings

Line fittings, if required shall be three (3) pieces with compression ends. Corporation stops shall be No. 110 as manufactured by the Mueller Company and shall have one end compression and the other Mueller thread. Curb stops shall be one (1) inch or greater and shall have compression ends. All curb stops shall be without drains. Saddles shall be single banded and as manufactured by the Mueller Company, Model No. H-10487, or approved equal. Male IPS by compression adaptors, unions, corporation stops and curb stops shall be made primarily of 85-5-5-5 bronze.

Compression type pipe adaptors shall be Style 90 as manufactured by the Dresser Manufacturing Division of Dresser Industries. All other joints, including IPS by compression adaptors, shall be of two piece type, which when they are screwed together bottom out on a shoulder. A stainless steel gripper band overlapping itself shall be squeezed into the tubing as the two pieces are assembled. An integral conductor spring shall be built in to ensure electrical continuity between the fitting and the tubing.

6.7.5 Curb Boxes

Curb boxes for one (1) inch services shall be made of cast-iron of the two piece, sliding type with cast-iron covers. The base piece, shall have a saddle-shaped bottom to fit over the service connection with ample clearance. The cover shall be extra heavy duty and secured with a 1 inch pentagonal plug. Curb boxes shall have a minimum inside diameter of 1 1/4 inches and have a sufficient length to fit finished grade with a minimum six (6) inch overlap of the telescoping pieces. Curb boxes shall be equipped with an inside stationary rod which is 36 inches long and pinned to the curb stop. The rod top shall be formed so that it fits Needham DPW Water Division's curb wrenches.

Curb boxes for services 1 1/2 inches and larger shall be Mueller No. H-1300-1, complete with lid and screw and the top shall be flush with the finished grade.

All curb stops and valves shall be operable at the time of paving and at the time of the acceptance of the work.

All curb boxes shall be covered by a "buffalo style" box for all services, as detailed in the Drawings.

6.7.6 Measurement and Payment

Measurement and payment for renewing house connections smaller than (1) inch shall be based on the unit bid price per water service renewed. Payment shall include all labor, materials, tools and equipment to remove the pavement (where necessary), excavate the trench, provide trench drainage (pumping), remove the existing water service lateral, provide a new water service lateral from the curb stop to the corporation stop on the main, provide a new curb stop and erie style box, and an additional "buffalo style" box for all curb stops, provide a new corporation stop on the main, provide all location marks, fittings, incidentals and all appurtenant work, backfill, compact, dispose of all excess materials and maintain the backfilled area in accordance with these specifications and as shown on the contract plans, or as directed by the Engineer.

Measurement and payment for renewing lead house connections shall be based on the unit bid price per water service renewed. Payment shall include all labor, materials, tools and equipment to remove the pavement (where necessary), excavate the trench, provide trench drainage (pumping), remove the existing water service lateral, provide a new water service lateral from the existing water meter inside the house (or building) to the corporation stop on the main, provide a new curb stop and erie style box, and an additional "buffalo style" box for all curb stops, provide a new corporation stop on the main, provide all location marks, fittings, incidentals and all appurtenant work, backfill, compact, dispose of all excess materials and maintain the backfilled area in accordance with these specifications and as shown on the contract plans, or as directed by the Engineer.

The service connections to be paid for under this item for all sizes and classes shall be per each service of the completed connection, the lengths of valves or fittings shall not be deducted.

The unit price for furnishing and installing copper tubing shall include excavation, installing service pipe (up to 2-1/2 inch diameter) at a depth of five (5) feet from the corporation stop to the curb stop with fittings and adapters as necessary and shown on the drawings, including connection to the existing service. Installation of "buffalo style" boxes for all services. Excavation, including saw cutting, removal and disposal of bituminous concrete, dewatering, bedding, backfill and restoration of property to include loaming, seeding, curbing (granite or bituminous reset in concrete), all types of sidewalk reconstruction and dust control measures.

Payment Items

	Unit
6.7.6a Renew water service lateral *water main to curb stop at property line*	Each
6.7.6b Renew water service lateral *water main to water meter inside house*	Each
6.7.6c Renew water service lateral special	Each

6.8 PRESSURE TEST, LEAKAGE TEST, AND CHLORINATION

6.8.1 Pressure and Leakage Test

All newly installed fresh water mains shall be hydrostatically pressure tested for strength and for leakage. Testing shall be conducted by an independent water testing company approved by the Engineer other than the Contractor who installed the water main. The testing shall conform to Section 4 of ANSI Standard C600-82 for "Installation of Ductile-Iron Water Mains and their Appurtenances".

6.8.2 Chlorination

Before being placed in service, all new pipelines shall be chlorinated in accordance with AWWA Standard C651-86 for "Disinfecting Water Mains". Chlorination shall be by the-Continuous Feed Method unless otherwise approved by the Engineer.

Disinfecting of water mains shall only be conducted by workmen who have had experience and are well acquainted with the use of chlorine or other disinfecting agents. The procedure shall be discussed with the Engineer before doing the work and shall be approved.

1. To ensure that the chlorine solution is distributed throughout the main, taps should be made at the beginning of the line to inject the chlorine and also at all extremities in order to ensure the flow of chlorine solution through the entire length of main.

2. Before chlorination, the line shall be flushed thoroughly to clear out all solid matter, mud, silt, leaves, etc., that may have accumulated in the line during installation.

3. Bacteriological test sample bottles will be provided by the Engineer. Samples shall be collected by the Contractor, in the presence of the Engineer, and then taken by the Engineer for laboratory analysis.

6.8.3 Measurement and Payment

Furnishing all labor, materials, tools, and equipment required to perform the pressure tests, leakage tests, disinfection, flushing and leaving the new water mains ready for service, will be paid at the lump sum price stated in the Proposal.

This price shall be full compensation for all work required to complete testing to demonstrate satisfactory compliance with pressure and leakage specifications and disinfection to demonstrate that the main is acceptable for domestic water service. The payments may be apportioned among the various sections of pipe to be installed and payment included in progress estimates after the satisfactory completion of each section, as agreed upon by the Engineer.

Payment Items

	Unit
6.8.3a Pressure Tests, Leakage Tests & Chlorination	Lump Sum

6.9 TEMPORARY WATER SERVICE

6.9.1 General

The Contractor shall furnish and install temporary water service to all water users whose regular water service is interrupted for more than 8 hours because of the Contractor's operations; and when there is no longer need for the temporary water service, he shall disconnect and remove the temporary water service and all materials installed in connection therewith.

6.9.2 Temporary Water Service

Unless otherwise approved by the Engineer, temporary water service shall be supplied from 2 inch diameter temporary pipelines at ground surface with hose connections to outside faucets on buildings. The temporary pipelines shall be fed from hydrants with sufficient valves and in such a manner that the hydrants can be readily used, for fire fighting without disconnecting the temporary water service.)

Hoses of at least 3/4 inch inside diameter shall be used to connect to buildings. Temporary pipelines shall be laid within street lines in locations satisfactory to the Engineer where they will cause the least obstruction and will be less likely to be damaged. At driveways, provision shall be made to permit property owners to drive over the temporary pipe and where temporary pipe or hose crosses sidewalks or other pedestrian ramps, by the use of bituminous concrete or cold patch to form a ramp on each side of the pipe. At street crossings, a narrow trench shall be cut in the paving and the temporary pipe placed just below the surface with temporary surfacing above it, or other satisfactory arrangements shall be made.

All piping materials used and assembled joints shall be of adequate quality to withstand the pressures that develop and all conditions of use. Joints shall not leak.

The contractor shall flush and sterilize all temporary pipe and hose as directed to prevent contamination. Before placing the temporary systems into service, they shall be flushed and disinfected by filling with a pre-mixed solution containing 50 parts per million of chlorine and allowed to stand full throughout for twelve (12) hours at which time a chlorine residual of not less than 25 parts per million will be required. Once put into use, the temporary service pipe shall be maintained until the water main is restored to service. Any interruptions, whether caused by frost, physical damage or otherwise, shall be immediately corrected and the service restored or replaced without additional payment.

In all cases, the location, method of placing, materials employed and the sanitary precautions shall be fully satisfactory to the Engineer.

6.9.3 Measurement and Payment

Payment for installing, maintaining and removing temporary water service shall be made at the lump sum price, as stated in the Proposal. This price and payment shall be full compensation for furnishing all material, labor, equipment and incidentals including excavation and backfill required to provide temporary connections, as shown on the drawings or as directed by the Engineer.

Payment Items

		Unit
6.9.3a	Furnishing and later removing temporary water service, including excavation for connections and all incidental work.	Lump Sum

6.10 RESTORATION OF LAWN SPRINLKER SYSTEM

6.10.1 General

The Contractor shall make any required adjustments to lawn sprinkler systems, horizontally or vertically, where during the course of constructing walks, driveways, and/or regarding lawns it becomes necessary.

6.10.2 Construction Methods

If the adjustment of sprinkler heads is to grade only, they shall remain in their original horizontal location, and operate in their original orientation. If the adjustment requires a horizontal relocation of the sprinkler heads, the contractor shall coordinate the work with the individual homeowner, and

orient the sprinklers so as to function in their original fashion. The system shall be tested to verify proper function and, if required, additional adjustments shall be made. All lawns shall be restored to their original condition. Damage to lawns shall be kept to a minimum.

The contractor shall reuse all existing sprinkler heads. Damaged sprinkler heads shall be replaced by an equivalent unit, and the cost shall be born by the contractor with no additional charge to the Town. Cost of tubing, fitting and other materials required to complete the restoration, shall be considered incidental, and no separate payment made.

6.10.3 Measurement and Payment

Measurement and payment for restoring sprinkler systems shall based on each system restored. Payment shall include all materials (except new sprinkler heads), labor tools and equipment required to completely restore lawn sprinkler systems. Cost for the restoration of lawns shall be paid for under the unit prices for the individual items, including loam borrow, lawn seeding, and lawn sodding.

Payment Items

		Unit
6.10.1a	Restoration of Lawn Sprinkler System	Each

6.11 CLEANING AND LINING CAST IRON PIPE

6.11.1 General

The Contractor shall furnish all labor, materials, tools and equipment necessary to clean and cement mortar line and place back in service potable water mains as indicated on the drawings and as herein specified. The engineer's approval is required before cement-mortar lining pipeline sections. Lining is to be uniform and thickness not less than 3/16-in. and not more than 1/4-in. at any point. Contractor responsible for proper curing of cement-mortar lining after it is placed.

The Contractor’s work shall cause minimum interference with operations and maintenance of contiguous potable water distribution systems. The engineer to determine suitability of existing pipeline sections for reuse as closure pieces and inspect for satisfactory cleaning, defects in pipeline and possible repair on replacement. A suitable thickness gauge shall be available on site at all times for Engineer’s use.

6.11.2 Qualifications of the Contractor

Contractor shall have performed work under constant supervision of a foreman with at least three years experience in this type of work.

6.11.3 Submittals

1. Submit detailed information regarding materials, proportions, strength test results of cement-mortar proposed for lining water mains at least seven days before cement-mortar is to be used for lining pipeline.
2. Submit detailed information regarding equipment, methods, access opening, disinfection and flushing, testing and operations schedules proposed for cleaning and lining work.
3. Samples in accordance with AWWA C602 and instructions of the Engineer.
4. Samples of cement-mortar used for lining by the contractor will be used by the Engineer as one standard of comparison for determining acceptability of finished cement-mortar lining.
5. Contractor responsible for taking, making curing, storing, packing and shipping for testing of all samples of cement mortar used for lining in manner acceptable to Engineer.
6. The Contractor will arrange and pay for independent tests of cement-mortar samples.
7. Samples to be taken from each separate batch of cement-mortar used for lining. At least one set of three test samples shall be taken for each day mortar is used for lining unless otherwise allowed by Engineer.

6.11.4 Products

CEMENT FOR MORTAR

A. Portland cement single brand of American-made, Type I in accordance with AWWA 602 unless otherwise approved in writing by Engineer.
B. Natural cement in accordance with AWWA C602.
C. Admixtures not allowed.

WATER FOR MORTAR

A. Water from Owner's system or otherwise as acceptable to Engineer.

SAND FOR MORTAR

A. Sand in accordance with AWWA C602 and be inert granular material having hard, strong, durable grains produced from hard crystalline rock.

CEMENT-MORTAR MIX STRENGTH

A. Cement-mortar for lining with following minimum compressive strengths in 28 days:

Individual Minimum	4,000 psi
Average Minimum	5,000 psi

PIPE, FITTINGS, VALVES AND HYDRANTS

A. Contractor's option to furnish and install either cast iron solid sleeves of mechanical or bell-and-spigot joint types, or cast-iron sleeve type couplings to make closures of water main access openings.
B. All fittings and valves required to be removed in order to prosecute the Work, or so ordered by the Engineer, will be removed and a new fitting and/or valve will be furnished and installed.

6.11.5 Installation

Contractor shall furnish, install, maintain and later remove all devices necessary to ensure public safety as required and as approved. Pipe, fittings, valves, hydrants and appurtenances removed and not reused remain property of Owner except as instructed otherwise by Engineer.

PREPARATION

A. Dewater water mains in preparation to the starting of work and drain all low points.
B. Operation of all valves in connection with work under the Contract shall be conducted under the supervision of Town staff unless specified or otherwise directed by the Owner. No additional compensation will be made to the Contractor for any delays in the operation of said valves for any time or materials involved if given permission to have the Contractor's own forces operate said valves.
C. Contractor will be responsible for excavating, if necessary, and raising the gate boxes to existing grade, repairing or supplying and installing new gate valve at locations where valves are inaccessible due to being buried or covered with asphalt on concrete, on tilted and/or broken gate box. The work shall include a permanent surface repair including concrete to anchor the top of the box and prevent settlement and asphalt conforming in depth to the original road surface.

OPENING AND CLOSING PIPELINES

A. Access openings at each end of pipeline section to be cleaned and lined.
B. Access openings for cement-mortar lining machine not to exceed 500 ft. except by written consent of Engineer.
C. Additional access openings at intermediate gates, bends, fittings and obstructions indicated on the drawings and at other locations necessary for satisfactory cleaning and lining.
D. Additional openings due to bends, fittings or other obstructions not indicated on the drawings to be made as necessary.
E. Cut cast-iron pipe with suitable power-operated saw approved by Engineer. Care required to prevent damage.
F. Cutting cast-iron pipe by hammer and chisel or by wheel type cutters not permitted.
G. Prevent dirt, debris, groundwater of foreign matter from entering pipeline except materials needed for cleaning and lining.
H. Section of pipe cut to permit access be carefully removed, cleaned, cement-mortar lined and safely stored for reuse as closure, except pipe unsuitable for reuse to be

discarded and new piece, properly lined, of sufficient size and strength provided and installed by Contractor.

I. Pipe ends with possible cracks or pipe sections damaged by cutting to be replaced by Contractor as approved by Engineer.

J. Closure of pipeline access to suitable for system pressures expected without leakage.

CLEANING PIPELINE

A. In accordance with AWWA C602 by means of suitable scraping machine.
B. Scraping machine moved through pipeline by power winch or motorized driver, or forced by hydraulic pressure as appropriate for section to be cleaned.
C. Provide clean interior metal surfaces in the water main ready to receive the cement-mortar lining.
D. After cleaning interior of the pipe free of sharp projections that would affect thickness of lining and all matter detrimental to lining.
E. Assure that cleaning debris will not interfere with operation of air valves, services, laterals, valves and other water main appurtenances.
F. Debris removed from inside of pipe and disposed of in acceptable manner.
G. At point debris flushed or removed from pipe, provide suitable containment and settling area, acceptable to Engineer, to ensure sediment, other unsatisfactory material and flushing water do not enter into drains, sewers, waterways or onto private property.
H. Immediately following each debris removal or flushing operation clean street and other affected areas to satisfaction of Engineer.
I. Prevent entry of dirt, debris, groundwater, or other foreign matter into pipeline except materials needed for cleaning and lining of pipe.
J. Upon completion of cleaning operations in each section of pipeline, furnish as appropriate suitable lights and mirrors for inspecting interior of cleaned pipeline section.
K. Advise Engineer of any evidence encountered during cleaning indicating repair and replacement may be required before pipeline section is lined.
L. Assist Engineer in making inspection to determine acceptability of cleaning and need for repair and replacement.

CEMENT-MORTAR LINING

A. In accordance with AWWA C602.
B. Proceed as soon as possible after pipeline cleaned and Engineer has approved pipeline to be lined.
C. Mix for sufficient time to obtain maximum plasticity. Mortar used for lining before initial set takes place.
D. Lining troweled in accordance with AWWA C602.
E. Cement-mortar lining of sharp bends, specials and areas closely adjacent to valves, where machine placing is impossible and correcting of defective areas done by hand.
F. Assure cement-mortar lining will not interfere with operations of air valves, service laterals, valves and other appurtenances.

G. Cleaned and lined pipe not to be pressurized or placed back in service until cement-mortar lining has been satisfactorily cured and not before 72 hours have passed after completion of lining operations in pipeline section.
H. Disinfect and flush pipeline sections, including connections, valves, hydrant laterals, as specified in Section 6.8 Pressure Test, Leakage Test and Chlorination and paid for under Item 6.8.3a after cement-mortar lining completed and cured.

6.11.6 Measurement and Payment

Measurement and payment for cleaning and lining shall be paid for in lump sum.

The unit price shall constitute full compensation including the furnishing of all materials, equipment, and labor, necessary to satisfactorily complete the cleaning and lining as indicated on the Drawings and all specified including all work incidental thereto. Payment shall include removing and replacing closure pieces, installing sleeves and couplings, cleaning mortar from the insides of any valve and service connections affected by the lining operation, installing restrained joints and restraints at bends and tees disturbed by work or replaced, and restoration of existing services

Payment Items		Unit
6.11.6a	14-Inch Water Main Cleaning and Lining	Lump Sum

SECTION 7 DRAINAGE CONTRACT SPECIFICATIONS

7.1 REINFORCED CONCRETE PIPE (RCP)

7.1.1 General

The Contractor shall make all earth excavations, furnish all materials, lay, joint and connect all drainage pipe at the locations and elevations shown on the contract plans, make drainage structure connections, backfill, compact, dispose of all excess materials and do all appurtenant work in accordance with these specifications and as shown on the contract plans or as directed by the Engineer.

7.1.2 Inspection and Acceptance of Pipe

All pipe will be inspected before being laid. Drainage pipe that fails to meet any of the specifications listed herein or is found to be damaged, as determined by the Engineer, shall be rejected. The Contractor shall provide all labor and equipment necessary to assist the Engineer in inspecting the pipe.

Reinforced concrete pipe shall meet ASTM Specification C76 and be Class III Wall B RCP minimum. Each unit of pipe shall have an interior surface which is free from roughness, projections, indentations, offsets or irregularities of any kind. Pipe units shall have a minimum laying length of 8 feet except as otherwise indicated or approved by the Engineer. Any pipe which is to be cut to meet length requirements shall be cut using an abrasive saw, blade-type cutters or other approved equipment adapted for that purpose. Sledge hammers and chisels are not considered suitable as cutters and shall not be permitted. All cuts shall be clean, smooth and at right angles to the longitudinal axis of the pipe except as otherwise permitted in these specifications or as shown on the contract plans. Certified copies of tests on materials and the pipe units will be required and shall be submitted by the Contractor to the Engineer when the pipe is delivered to the site. All tests shall be made in accordance with the latest applicable ASTM Specifications.

Acceptance of the pipe shall be on the basis of plant load-bearing tests, material tests and inspection of the complete product. The quality of all materials used in the pipe, the process of manufacture and any required cuts made in the pipe shall also be considered during the acceptance process. Inspection may be made at the place of manufacture, after delivery to the site or at both places. Any pipe unit shall be subject to rejection at any time because of failure to meet any of the specification requirements, damage to the pipe caused by storage, improper handling or dropping materials or equipment on the pipe. All pipe which is rejected by the Engineer shall be immediately removed from the project site by the Contractor.

7.1.3 Installing RCP Pipe

The pipe shall be laid true to the lines and grades indicated on the contract plans. Should a utility conflict, or other obstruction as determined by the Engineer, occur and a field change be necessary, the Engineer shall make the required decisions regarding final placement of the pipe. The pipe shall be set in a bedding of gravel borrow, type c, meeting Section 5.6.1, unless the existing spoil is determined to be suitable by the Engineer. The bedding shall be placed to a minimum depth of six (6) inches below the bottom of the pipe and shall extend around and over the pipe for a minimum distance of six (6) inches. The pipe shall be installed from the low end to the high end with the bell of the pipe at the high end. Each pipe unit shall be handled into its position in the trench by using equipment adapted for that purpose. The Contractor shall furnish approved devices to properly support the pipe when it is lifted. Excavations and backfill for the pipe shall be made in accordance with Sections 5.5 and 5.6 Earthwork Specifications.

7.1.4 Pipe Jointing Requirements

Each pipe unit shall be so laid as to form a tight joint with the next adjoining pipe and bring the inverts continuously to the required grade. Suitable bell holes shall be provided so that after placement only the barrel of the pipe receives bearing pressure from the supporting material. When each pipe unit has been properly bedded, sufficient bedding and backfill material shall be placed and compacted between the pipe and the sides of the trench to hold the pipe in correct alignment. Care shall be taken to distribute the fill evenly on both sides of the pipe in order to prevent misalignment. After the pipe units are aligned in the trench and are ready to be sealed, the entire circumference of the pipe at the joint shall be cleaned. Each joint shall be cemented with Portland Type II cement mortar around the entire circumference of the pipe joint meeting MHD Specification M4.02.15. Mortar shall be placed in the bell holes in order to seal the bottom portion of the joint. The mortar shall be troweled in place by hand and shall completely conform to the shape of the joint. The mortar shall extend from the top of the bell on the preceding pipe to the barrel of the succeeding pipe forming a straight line which creates a 30 degree angle with the longitudinal axis of the barrel of the pipe. The joint shall be completely mortared and shall have a smooth surface finish.

7.1.5 Connections to Existing Structures

Connections to existing structures shall be made by coring, drilling, pneumatic chisel, or other means as approved by the Engineer. Connections to precast or poured in place manholes or catch basins shall be made by coring. The Contractor shall be responsible to ensure that the invert of the connecting pipe is built to the design invert elevation shown on the plans. The pipe shall extend into the structure sufficiently so that all portions of the end of the pipe match the inside

wall of the structure or protrude into the structure. The end of the pipe closest to the inside wall of the structure shall not protrude more than 2 inches beyond the inside wall of the structure. All connections to existing structures shall be mortared with Portland Type II cement meeting MHD Specification M4.02.15. Each connection shall be mortared completely around the circumference of the pipe inside and outside the structure. The mortar shall be troweled by hand and shall fill completely the voids between the pipe wall and the structure. The inside and outside mortar surfaces shall be made smooth, neat and in a good workmanlike condition.

7.1.6 Measurement and Payment

Measurement and Payment for drainage pipe shall be based on the unit bid price per linear foot of the completed pipeline lengths taken along their centerlines. Payment shall include all materials, labor, tools and equipment to remove the pavement (where necessary) excavate the trench, provide trench drainage (pumping), install bedding materials, lay and joint the pipe, cut the pipe to meet required lengths, safeguard and protect other utilities, backfill and compact the backfill, dispose of surplus or unacceptable spoil and maintain the backfilled trench in accordance with these specifications and as shown on the contract plans or as directed by the Engineer.

Payment Items

		Unit
7.1.6a	RCP pipe - 12 inch	Linear Foot
7.1.6b	RCP pipe - 15 inch	Linear Foot
7.1.6c	RCP pipe - 18 inch	Linear Foot
7.1.6d	RCP pipe - 21 inch	Linear Foot
7.1.6e	RCP pipe - 24 inch	Linear Foot
7.1.6f	RCP pipe - 42 inch	Linear Foot
7.1.6g	Connection to Existing Structures, Coring	Each
7.1.6h	Connection to Existing Structures, Other	Each

7.2 POLYVINYLCHLORIDE (PVC) PIPE

7.2.1 General

The Contractor shall make all earth excavations, furnish all materials, labor, tools and equipment, install bedding materials, lay, joint and connect all drainage or sub-drain pipe at the locations and elevations shown on the contract plans, make drainage or sub-drain structure connections, backfill, compact, dispose of all excess materials and do all appurtenant work in accordance with these specifications and as shown on the contract plans or as directed by the Engineer.

7.2.2 Inspection and Acceptance of Pipe

All pipe will be inspected before being laid. Drainage pipe that fails to meet any of the specifications listed herein or is found to be damaged as determined by the Engineer shall be rejected. The Contractor shall provide all labor and equipment necessary to assist the Engineer in inspecting the pipe. Polyvinylchloride (PVC) pipe shall meet ASTM Specification D-3034 SDR35 or as specified by the Engineer. Sub-drains shall meet the provisions of M5.03.9 of the MassHighway specifications for slot-perforated corrugated plastic pipe. Any pipe which has received a severe blow that may have caused an incipient fracture, even though no such fracture can be seen, shall be marked as rejected and removed from the project site. Any pipe showing visible damage and for which it is believed there is no incipient fracture beyond the limits of the damaged section, may have the damaged section, as identified by the Engineer, cut off before the pipe is laid. The cut shall be made in the sound barrel at a point at least 12 inches from the visible limits of the damage. All pipe cuts shall be filed smooth and beveled to match the manufacturer's spigot end of the pipe. All cutting shall be done with blade-type cutters, abrasive discs or other equipment approved by the Engineer. Care shall be taken to avoid exposure to direct sunlight or prolonged high temperature for extended periods of time immediately preceding installation.

7.2.3 Installing PVC Pipe

The pipe shall be laid true to the lines and grades indicated on the contract plans. Should a utility conflict occur and a field change be necessary, the Engineer shall make the required decisions regarding final placement of the pipe. The pipe shall be set in a bedding of gravel borrow, type c meeting Section 5.6.1 unless the existing spoil is determined to be suitable by the Engineer. The bedding shall be placed to a minimum depth of six (6) inches below the bottom of the pipe and shall extend around and over the pipe for a minimum distance of six (6) inches. Sub-drain trench shall be lined with filter fabric, and backfilled with ¾” to 1½” screened gravel, as shown on the plans. The pipe shall be installed from the low end to the high end with the bell of the pipe at the high end. Each pipe unit shall be handled into its position in the trench by using equipment adapted for that purpose. The Contractor shall furnish approved devices to permit satisfactory support of all parts-of the pipe unit when it is lifted. Excavations and backfill for the pipe shall be made in accordance with Section 5.5 and 5.6 Earthwork Specifications.

7.2.4 Pipe Jointing Requirements

Pipe joints shall meet ASTM Specification D-3212 for pipes using flexible elastomeric seals and shall not allow infiltration to exceed 50 gallons/inch/diameter/mile/day. Each pipe unit shall be laid and connected so as to form a tight joint with the adjoining pipe and bring the inverts continuously to the

required grade. Pipe ends shall be kept clean of all debris, dirt, grease or other material which may prevent a tight seal from forming. Care shall be taken to preserve the alignment of pipes already laid during the jointing process. After the pipe units are aligned in the trench and are ready to be joined, all joint surfaces shall be cleaned. Immediately before jointing the pipe, the bell or groove shall be lubricated in accordance with the manufacturer's recommendation. Each pipe unit shall then be carefully pushed into place without damaging the pipe or gasket and create a tight seal. Joints where the gasket is damaged or not properly positioned as determined by the Engineer shall be pulled apart and remade using a new gasket.

7.2.5 Connections to Existing Structures

Connections to existing structures shall be made by pneumatic chiselers, drilling, coring or other means as approved by the Engineer. Connections to precast or poured in place manholes or catch basins shall be made by coring. The Contractor shall be responsible to ensure that the invert of the connecting pipe is built to the design invert elevation shown on the plans. The pipe shall extend into the structure sufficiently so that all portions of the end of the pipe match the inside wall of the structure or protrude into the structure. The end of the pipe closest the inside wall of the structure shall not protrude more than 1 inch beyond the inside wall of the structure. All connections to existing structures shall be mortared with Portland Type II cement meeting MHD Specification M4.02.15. Each connection shall be mortared completely around the circumference of the pipe inside and outside the structure. The mortar shall be troweled by hand and shall fill completely the voids between the pipe wall and the structure. The inside and outside mortar surfaces shall be made smooth, neat and in a good workmanship condition.

7.2.6 Measurement and Payment

Measurement and Payment for drainage pipe shall be based on the unit bid price per linear foot of the completed pipeline lengths taken along their centerlines. Payment shall include all materials, labor, tools and equipment to remove the pavement (where necessary), excavate the trench, provide trench drainage (pumping), install bedding materials, lay and joint the pipe, cut the pipe to meet required lengths, safeguard and protect other utilities, backfill and compact the backfill, dispose of surplus or unacceptable spoil and maintain the backfilled trench in accordance with these specifications and as shown on the contract plans or as directed by the Engineer. Measurement and payment for sub-drains shall also include the cost of providing and placing filter fabric and washed gravel.

Payment Items

Unit

7.2.6a	PVC pipe - 4 inch	Linear Foot
7.2.6b	PVC pipe - 18 inch	Linear Foot
7.2.6c	PVC pipe - 24 inch	Linear Foot
7.2.6d	4 inch Subdrain	Linear Foot

7.3 DRAINAGE MANHOLES

7.3.1 General

The Contractor shall furnish all materials, labor, tools and equipment, make all earth excavations, install base materials, drainage structures, brick leveling courses, tables and channels, frames and covers at the locations and elevations shown on the contract plans, make drainage structure to pipe connections, backfill, compact, dispose of all excess materials and do all appurtenant work in accordance with these specifications as shown on the contract plans or as directed by the Engineer.

7.3.2 Foundation Requirements

All drainage manhole structures shall be placed on a minimum 8 inch thick layer of compacted gravel, type c, meeting section 5.6.1. The gravel base shall be compacted in one 8 inch lift and shall be level. The gravel base shall extend for a distance of at least 1 foot beyond the limits of the concrete base of the manhole structure. The Contractor shall be responsible to ensure that the base is set at the correct elevation to meet these specifications and the invert requirements on the contract plans.

7.3.3 Precast Reinforced Concrete Manhole Sections

The drainage manhole sections shall conform to the ASTM Standard Specification for Precast Reinforced Concrete Manhole Sections C478 Eccentric Cone or Flat Slab Top and Base Riser Section with Integral Floor.

7.3.4 Manhole Joints

Manhole joints shall conform to ASTM C478 and shall be sealed using Butyl Rubber or Neoprene Rings and Portland Type II Cement Mortar.

7.3.5 Drainage Manhole Steps

Drainage manhole steps shall be installed and shall conform to ASTM C478.

7.3.6 Brick Leveling Courses

At least two layers and not more than five layers of a brick leveling course shall be constructed on top of the drainage structure. All brick shall be sound, hard and

uniformly burned brick, regular and uniform in shape and size, of compact texture and satisfactory to the Engineer. Rejected brick shall be immediately removed from the work site. The bricks shall be clean and thoroughly wetted shortly before use and each brick shall be laid in a full bed and joint of mortar meeting MHD M4.02.15 and bonded. The brick shall be laid radially along its longitudinal axis around the manhole opening and shaped to adjust the pitch of the manhole frame and cover to match the cross-section and grade of the road as shown on the contract plans exactly.

7.3.7 Table and Channel Construction

A channel shall be formed of 4000 psi type II portland cement concrete meeting MHD Specification M4.02.00 et seq. in the bottom of the manhole base section in order to eliminate the possibility of standing water in the base of the manhole.

7.3.8 Pipe to Manhole Connections

Pipe to manhole connections shall be made at pre-formed knock-outs at the locations and inverts shown on the contract plans. Pipe connections shall meet the same specifications previously stated in section 7.1.5. It is the Contractor's responsibility to coordinate with the manufacturer to obtain the correct manhole structures with the correct knock-out sizes, locations and elevations.

7.3.9 Drainage Manhole Frames and Covers

Manhole frames and covers shall be heavy duty, 24 inch diameter, Marblehead Pattern as manufactured by E. L. LeBaron Foundry Company or approved equal. Each frame and cover shall have a minimum weight of 450 pounds and the cover shall be marked with the letter "D".

7.3.10 Measurement and Payment

Measurement for furnishing and installing drainage manholes shall be based on a standard unit having a depth of 6 1/2 feet or less as indicated on the contract plans measured vertically at the center of the structure from the top of the cover to the invert of the finished channel. Drainage manholes greater than the 6 1/2 ft. depth and less than or equal to 8 1/2 ft. as measured above shall be based on the unit bid price for Drainage Manhole - 8 1/2 ft..

Drainage manholes greater than the 8 1/2 ft. depth and less than or equal to 10 1/2 ft. as measured above shall be paid based on the unit price for Drainage Manhole - 10 1/2 ft.

Drainage manholes greater than the 10 1/2 ft. depth as measured above shall be considered Special Drainage Manholes and shall be measured as complete units regardless of depth.

Payment shall be on a per unit basis and shall include all labor, materials, tools and equipment to excavate, provide drainage (pumping), install base materials, drainage manhole sections, flat slab tops (if the manhole depth is less than 6 1/2 feet), joints, brick leveling courses, channels (tables), pipe connections, manhole frames and covers at the locations and elevations shown on the contract plans, backfill, compact, dispose of excess materials and maintain the backfill around the structure in accordance with these specifications and as shown on the contract plans or as directed by the Engineer.

Payment Items

		Unit
7.3.10a	Drainage Manhole - 6 1/2 ft.	Each
7.3.10b	Drainage Manhole - 8 1/2 ft.	Each
7.3.10c	Drainage Manhole - 10 1/2 ft.	Each
7.3.10d	Special Drainage Manhole	Each

7.4 CATCH BASINS

7.4.1 General

The Contractor shall furnish all materials, tools and equipment, make all excavation, install base materials, structures, brick leveling courses, frames and grates at the locations and elevations shown on the contract plans, make drainage structure to pipe connections, backfill, compact, dispose of all excess materials, maintain the backfilled area around the structure and do all appurtenant work in accordance with these specifications and as shown on the contract plans or as directed by the Engineer.

7.4.2 Foundation Requirements

All catch basin structures shall be placed on a minimum 8 inch thick base layer of compacted gravel, type c, meeting section 5.6.1. The gravel base shall be compacted in one 8 inch lift and shall be level. The gravel base shall extend for a distance of at least I foot beyond the limits of the concrete base of the catch basin structure. The Contractor shall be responsible to ensure that the base is set at the correct elevation to meet these specifications and the invert requirements on the contract plans.

7.4.3 Precast Reinforced Concrete Catch Basins

The catch basin structures shall conform to the ASTM Standard Specification for Precast Reinforced Concrete Manhole Sections (ASTM C478) Flat Slab Top and Base Riser Section with Integral Floor. No steps or ladders shall be installed in the catch basin structure.

Sluiceway catch basins shall be constructed from concrete block placed on a cement concrete base, as shown on the plans.

7.4.4 Catch Basin Joints

Catch basin joints shall conform to ASTM C478.

7.4.5 Catch Basin Sump Requirements

A 30 inch sump shall be provided below the lowest pipe invert connected to the catch basin structure. Sluiceway catch basins shall constructed as shown on the plans, and shall not contain a sump.

7.4.6 Brick Leveling Courses

Brick leveling courses shall conform to the specifications previously stated in Section 7.3.6.

7.4.7 Pipe to Catch Basin Connections

Pipe to catch basin connections shall be made at pre-formed knock-outs at the locations and inverts shown on the contract plans. Pipe connections shall meet the same specifications stated in Section 7.1.5.

It is the Contractor's responsibility to coordinate with the manufacturer to obtain the correct catch basin structures with the correct knock-out sizes, locations and elevations.

7.4.8 Catch Basin Frames and Grates

Catch basin frames and grates shall be heavy duty, cast iron 24 inch square standard except as otherwise specified on the contract plans. The frame shall be 4-flange unless a curb inlet is required in which case it shall be 3-flange. The grate shall be a standard square pattern and be rated bicycle safe. Double grates, when required, shall be set in a double frame manufactured for that purpose. Catch basin frames and grates shall be as manufactured by R. L. LeBaron Foundry Company or approved equal.

7.4.9 Curb Inlets

Curb inlets, when required, shall conform to MHD Specification M9.04.5. The curb inlet shall be installed immediately behind the grate and the centerline of the inlet shall match the centerline of the grate. The curb inlet shall have a 6 inch reveal at the gutter and shall be parallel with the grade of the gutter at the inlet location. Granite transition stones shall be installed at both ends of the curb inlet in order to provide a smooth transition from the roadway curb to the curb inlet and back to the roadway curb except as otherwise specified in the contract plans. Granite transition stones shall be at least 3 feet and no more than 4 feet in length. The transition stones and curb inlet shall be set in a bed of mortar meeting MHD Specification M4.02.15. Adjustments to the curb inlet to align the inlet with the gutter grade shall be made with shaped brick. The foundation for the transition stones shall consist of a 6 inch compacted gravel base on which the mortar shall be placed. The joints between the curb inlets and transition stones shall be no greater than 1/4 inch wide and shall be mortared.

All existing curb inlets located within the Project Limits at the edge of pavement shall be remove and stacked by the contractor at a designation to be determined by the Engineer.

7.4.10 Measurement and Payment

Measurement for furnishing and installing catch basins shall be based on a standard 5 1/2 ft. or 6 1/2 ft. unit measured vertically on the catch basin centerline from the INSIDE bottom of the sump to the top of the catch basin grate. Catch basins greater than the 6 1/2 ft. depth as measured above shall be considered Special Catch Basins and shall be measured as complete units regardless of depth. Catch basins for double grates shall be 5-foot diameter (inside measure), include the flat top section, and also be considered Special Catch Basins, regardless of depth. Payment shall be on a unit price basis and shall include compensation for providing all material, labor, tools and equipment to excavate, provide drainage (pumping), install base materials, catch basin sections, brick leveling courses, pipe connections, catch basin frames and grates at the locations and elevations shown on the contract plans, backfill, compact, dispose of all excess materials and maintain the backfilled area around the structure in accordance with these specifications and as shown on the contract plans or as directed by the Engineer.

Measurement for furnishing and installing curb inlets shall be based on a per unit basis. Payment shall include compensation for providing all material, labor, tools and equipment to excavate, install foundation materials (including gravel, mortar and shaped brick), curb inlets and associated transition stones, mortared joints at the locations and elevations described in these specifications and as shown on the contract plans, backfill, compact, dispose of all excess materials and maintain the backfilled area around the curb inlet and transition stones in accordance with these specifications and as shown on the contract plans or as directed by the Engineer. Removal and stacking of existing granite curb inlets shall be based on a per unit

basis payment shall include. All compensation for excavating, removal, loading, and transporting existing curb inlets to a location designated by the engineer. All existing curb inlets will become the property of the owner.

Sluiceway Catch basin shall be based on lump sum to include all labor and materials described in these specifications and as shown on the contract plans, to connect the scupper installed in the curbing to the manhole including coring, PVC piping excavation, backfill, asphalt removal, compaction and dispose of all excess materials.

Payment Items

		Unit
7.4.10a	Catch Basin - 5 1/2 ft.	Each
7.4.10b	Catch Basin - 6 1/2 ft.	Each
7.4.10c	Special Catch Basin	Each
7.4.10d	Curb Inlet	Each
7.4.10e	Curb Inlet Removed & Stacked	Each
7.4.11a	Sluiceway Catch Basin	Each
7.4.11b	Double Straight Granite Curb Inlet	Each

7.5 MISCELLANEOUS DRAINAGE WORK

7.5.1 Rebuilding Existing Structures

The Contractor shall provide all materials, labor, tools and equipment, make all earth excavations, remove and store castings, plate or cover underground structures as required, rebuild the existing structure to the limits indicated on the plans or as directed by the Engineer, install brick leveling courses, reset the existing casting, backfill, compact, dispose of all excess material and maintain the backfilled area in accordance with these specifications and as shown on the contract plans or as directed by the Engineer.

When the line or grade or both the line and grade of the structure changes by six (6) inches or less, the structure shall be adjusted to the proposed line and grade. (See Section 9.1.6 Casting Adjustments)

When the line or grade or both the line and grade of the structure changes by more than six (6) inches, the structure shall be remodeled. The sloped and/or vertical masonry shall be removed to such depths as shown on the contract plans or directed by the Engineer and new masonry shall be constructed to conform to the proposed design and in conformity with the requirements of the applicable parts of Section 201 of the MHD Specifications.

When, in the judgment of the Engineer, the existing structure shows deterioration or is otherwise unsuitable for remodeling, the structure shall be rebuilt. The

casting and deteriorated masonry shall be removed in a neat manner until a clean sound base is obtained upon which concrete blocks may be set to rebuild the structure. The casting shall be set to the proposed line and grade on brick leveling courses as shown on the contract plans or as indicated by the Engineer.

Drainage structures to be abandoned are indicated in the design plans. The contractor will remove the upper portions of the masonry to a depth of 3 feet below the finish grade. Inlets and outlets of structures shall be plugged with brick masonry not less than 8 inches in thickness. Structures shall be completely filled with selected excavated material placed in 12 inch layers and thoroughly compacted. The present castings shall be carefully removed. They shall be satisfactorily stored and protected until they are required for reuse or removed from the project by the owner.

Drainage structures to be removed entirely are indicated on the contract plans. The contractor shall first remove the frame and grate or cover and if approved by the Engineer, will safely store the casting for reuse. All material associated with the existing structure deemed unsuitable for reuse by the Engineer will be removed from the site and disposed of by the Contractor. The removal of the drainage vault refers to a large concrete structure with a granite top slab. This structure shall be removed in its entirety to allow proper installation of a new 6 foot diameter drainage manhole.

New castings shall be provided where required by the contract drawings or as indicated by the Engineer. New castings shall be installed in accordance with these specifications and as directed by the Engineer.

When a change in type of structure is required, as converting a catch basin to a manhole, the masonry shall be removed to such a depth as directed by the Engineer and new masonry, including a brick invert, shall be constructed to conform to the proposed design.

The contractor will be held responsible for the protection of the castings. Any frames grates or covers damaged in any manner during the progress of construction shall be replaced with new castings by the contractor at his expense.

Prior to the actual removal of the present castings, a count will be made and recorded of all castings which are in satisfactory condition for reuse. Castings to be salvaged and reused will be reset at existing or proposed structures as directed by the Engineer.

7.5.2 Flared End Sections (FES)

Reinforced concrete flared end sections shall be provided where indicated on the contract plans and shall be appropriate for the pipe diameter to which they are attached. The flared end sections shall be situated on an 8 inch minimum compacted gravel base. The flared end sections shall be as manufactured by Scituate Concrete Pipe Corporation or approved equal. A rip-rap apron 5 feet long and 4 feet wide shall be constructed at the outfall to the flared end section using 50 pound stone. The stone shall be set in an 8 inch gravel base and smaller stones shall be set in between the larger stones to form a stable structure.

7.5.3 Measurement and Payment

Measurement and payment for casting adjustments shall be as specified in Section 9.1.19.

Measurement and payment for remodeling structures shall be on a per unit basis and shall include all materials, labor, tools and equipment and all work necessary to provide the remodeled structure in accordance with these specifications and as shown on the contract plans or as directed by the Engineer.

Measurement and payment for rebuilding structures shall be on a per vertical foot basis from the elevation of the clean sound base to the elevation of the bottom of the casting and shall include all materials,, labors, tools and equipment and all work necessary to provide the rebuilt structure in accordance with these specifications and as shown on the contract plans or as directed by the Engineer.

Measurement and payment for new castings shall be on a per unit basis and shall include all work necessary to provide new castings complete and in-place in accordance with these specifications and as shown on the contract plans or as directed by the Engineer.

Measurement and payment for flared-end sections shall be on a per unit basis and shall include all materials, labor, tools and equipment and all work necessary to provide flared-end sections and their associated rip-rap aprons in accordance with these specifications and as shown on the contract plans or as directed by the Engineer.

Measurement and payment for a change in type of structure shall be on a per unit basis and shall include all labor, materials, tools, equipment, and all work necessary to provide the change in type structure in accordance with these specifications and as shown on the contract plans or as directed by the Engineer.

Measurement and payment for all castings removed and reset either for manhole frames and covers or catch basin frames and grates, when rebuilding a structure or salvaging an existing casting from an abandoned or removed structure, where such casting has been inspected and approved for reuse by the Engineer, will be paid for

on a per unit basis. Resetting of castings will include removal temporary storage and resetting casting, and shall include all labor, materials, tools, equipment, and all work necessary to provide the change in type structure in accordance with these specifications and as shown on the contract plans or as directed by the Engineer.

Measurement and payment for drainage structures either abandoned or removed will be paid for on a per unit basis and shall include all labor, materials, tools, equipment, and all work necessary to provide the change in type structure in accordance with these specifications and as shown on the contract plans or as directed by the Engineer.

Payment Items

		Unit
7.5.3a	Drainage Structure Remodeled	Each
7.5.3b	Drainage Structure Rebuilt	Vert. Foot
7.5.3c	Frame and Grate	Each
7.5.3d	Frame and Cover	Each
7.5.3e	Flared-End Section with Rip-Rap	Each
7.5.3f	Drainage Structure Change in Type	Each
7.5.3g	Drainage Structure Abandoned	Each
7.5.3h	Drainage Structure Removed	Each
7.5.3i	Frame & Grate Removed & Reset	Each
7.5.3j	Frame & Cover Removed & Reset	Each
7.5.3k	Double Frame and Grate	Each
7.5.3l	Drainage Vault Removed	Each

SECTION 8 SEWER CONTRACT SPECIFICATIONS

8.1 POLYVINYLCHLORIDE (PVC) PIPE

8.1.1 General

The Contractor shall make all earth excavations, furnish all materials, labor, tools and equipment, install bedding materials, lay, joint and connect all sewer pipe at the locations and elevations shown on the contract plans, make sewer structure connections, backfill, compact, dispose of all excess materials and do all appurtenant work in accordance with these specifications and as shown on the contract plans or as directed by the Engineer.

8.1.2 Inspection and Acceptance-of Pipe

All pipe will be inspected before being laid. Sewer pipe that fails to meet any of the specifications listed herein or is found to be damaged as determined by the Engineer shall be rejected. The Contractor shall provide all labor and equipment necessary to assist the Engineer in inspecting the pipe. Polyvinylchloride (PVC) pipe shall meet ASTM Specification D-3034 SDR35 or as specified by the Engineer. Any pipe which has received a severe blow that may have caused an incipient fracture, even though no such fracture can be seen, shall be marked as rejected and removed from the project site. Any pipe showing visible damage and for which it is believed there is no incipient fracture beyond the limits of the damaged section, may have the damaged section, as identified by the Engineer, cut off before the pipe is laid. The cut shall be made in the sound barrel at a point at least 12 inches from the visible limits of the damage. All pipe cuts shall be filed smooth and beveled to match the manufacturer's spigot end of the pipe. All cutting shall be done with blade-type cutters, abrasive discs or other equipment approved by the Engineer. Care shall be taken to avoid exposure to direct sunlight or prolonged high temperature for extended periods of time immediately preceding installation.

8.1.3 Installing PVC Pipe

The pipe shall be laid true to the lines and grades indicated on the contract plans. Should a utility conflict, or other obstruction as determined by the Engineer, occur and a field change be necessary, the Engineer shall make the required decisions regarding final placement of the pipe. The pipe shall be set in a bedding of 3/4 inch crushed stone meeting MHD Specification. The bedding shall be placed to a minimum depth of six (6) inches below the bottom of the pipe and shall extend around the pipe up to the spring line. The pipe shall be laid accurately to the required lines and grades using a pipe-laying laser in accordance with the manufacturer's recommendations. Care shall be taken to maintain an

accurate alignment and to give the pipe a firm bearing along its entire length. Walking or stepping directly on the pipes shall not be permitted after they have been laid. Adjustments to the line and grade in order to comply with the contract plans shall be made by re-grading the bedding material. The bedding shall then continue over the pipe using gravel borrow, type c as specified in Section 5.6.1 unless the existing spoil is determined to be suitable by the Engineer. Should the existing spoil be used, all stones greater than four (4) inches shall be removed prior to placement of the spoil. The gravel bedding shall be thoroughly compacted using a vibratory compactor. Any length of pipe which becomes damaged or misaligned shall be removed and replaced by a sound and satisfactory length to the correct alignment by the Contractor at his expense. The pipe shall be installed from the low end to the high end with the bell of the pipe at the high end. Each pipe unit shall be handled into its position in the trench by using equipment adapted for that purpose. The Contractor shall furnish approved devices to properly support the pipe when it is lifted. Excavations and backfill for the pipe shall be made in accordance with Section 5.5 and 5.6 Earthwork Specifications.

8.1.4 Pipe Jointing Requirements

Pipe joints shall meet ASTM Specification D-3212 for pipes using flexible elastomeric seals and shall not allow infiltration to exceed 50 gallons/inch/diameter/mile/day. Each pipe unit shall be laid and connected so as to form a tight joint with the adjoining pipe and bring the inverts continuously to the required grade. Pipe ends shall be kept clean of all debris, dirt, grease or other material which may prevent a tight seal from forming. Care shall be taken to preserve the alignment of pipes already laid during the jointing process. After the pipe units are aligned in the trench and are ready to be joined, all Joint surfaces shall be cleaned. Immediately before jointing the pipe, the bell or groove shall be lubricated in accordance with the manufacturer's recommendations. Each pipe unit shall then be carefully pushed into place without damaging the pipe or gasket and create a tight seal. Joints where the gasket is damaged or not properly positioned as determined by the Engineer shall be pulled apart and remade using a new gasket.

8.1.5 Pipe Fittings

Couplings

Couplings shall be non-shear elastomeric with a pipe stiffness factor two times greater than SDR-35 PVC pipe as manufactured by DFW/HPI or approved equal. Both pipe ends and the coupling shall be cleaned of all dust, dirt or debris prior to making the connection. Cut pipe ends shall be filed smooth using a hand file around the inside and outside diameter of the pipe prior to application of the coupling. Stainless steel clamps shall be used to secure the coupling to the pipe.

Saddles

Saddles shall be flexible elastomeric wye configuration as manufactured by DFW/HPI or approved equal. Saddle tees shall not be used unless specifically approved in writing by the Engineer. The saddle wye shall be set at the two o'clock or ten o'clock position on the pipe barrel and angled in the direction of flow.' Saddle connections shall be at least 2 feet away from all existing sewer main pipe joints.

Prior to the application of the saddle, the surface of the pipe shall be cleaned of all dust, dirt or debris. -In the case of PVC or transit (asbestos-cement) pipe, the barrel shall be cored using a hole saw and the inside and outside edges filed smooth. Holes in clay pipe shall be accomplished by drilling several drill holes around the circumference of the connection and chiseling the remainder to produce as neat and uniform a hole as possible. Holes which introduce fractures into the pipe barrel or are non-uniform or jagged in appearance as determined by the Engineer shall result in replacement of the pipe section by the Contractor at his expense.

The saddle shall be secured to the barrel of the pipe with two stainless steel clamps.

Saddle connections to the sewer main shall be supported by a concrete cradle at least two (2) feet in length.

Wyes, Tees and Bends

Wye, tee and bend fittings shall be SDR-35 PVC meeting ASTM specification D3034 and D3212. Fittings shall be as manufactured by Plastic Trends, Inc., Vassallo or approved equal.

Temporary Caps and Plugs

Temporary caps and plugs shall be SDR-35 PVC meeting ASTM specification D3034 and D3212. Caps and plugs shall be as manufactured by Plastic Trends, Inc., Vassallo or approved equal.

8.1.6 Concrete Cradles and Envelopes

The Contractor shall provide concrete cradles and/or envelopes in accordance with these specifications and as indicated on the contract plans or as directed by the Engineer. Concrete shall be 3000 psi Type II portland cement concrete with 3/4 inch aggregate and shall be placed to a minimum thickness of six (6) inches from the barrel of the pipe along its length. Concrete cradles shall be installed up to the spring line of the pipe (120 arc centered on the vertical axis of the pipe cross-

section). Concrete envelopes shall completely surround the pipe. Concrete (including aggregates) shall conform to MHD Specification M4.02.00 et. seq. Precast concrete blocks shall be used to support the pipe at the correct line and grade while placing the concrete. No wood blocks are permitted.

8.1.7 Chimneys

The Contractor shall provide chimneys in accordance with these specifications and as indicated on the contract plans or as directed by the Engineer. The chimney pipe shall be eight inch (8") SDR 35 PVC. The bottom of the chimney pipe shall be connected to the sewer main using the appropriately sized tee as specified in section 8.1.5. The top of the chimney pipe shall be fitted with an 8 inch by four inch wye fitting and temporary plugs. The top of the chimney pipe shall be at least five (5) feet below the finished grade. An eight foot long concrete cradle as specified in section 8.1.6 and centered on the chimney shall be provided under the sewer main. The chimney pipe and fittings shall be located within an 18 inch corrugated polyethylene pipe.

The polyethylene pipe shall be provided in two sections. The bottom section shall be 24 inches in length and the top section shall vary according to design requirements. The bottom end of the polyethylene pipe shall be cut to allow passage of the sewer main through the end of the pipe with a minimum 2 inch clearance between the edge of the cut and the sewer main. The bottom end shall be anchored in the concrete cradle under the sewer main. The top end shall be cut to allow access to the wye fitting through the sidewall of the polyethylene pipe. The two sections shall be joined by a "spin-on" coupling as manufactured by Advanced Drainage Systems, Inc. (ADS) or approved equal. The annular space between the riser pipe and the surrounding polyethylene chimney shall be completely filled with fine to medium mason's sand.

8.1.8 Connections to Existing Structures

Connections to existing sewer manholes shall be made by coring. Expandable rubberized boots shall be used at each connection. The Contractor shall be responsible for insuring that the invert of the connecting pipe is built to the design invert elevation shown on the plans. The pipe shall extend into the structure sufficiently so that all portions of the end of the pipe match the inside wall of the structure. The cavity between the outside wall of the pipe and the cored surface shall be completely filled with quick drying non-shrink hydraulic cement. The cement surfaces shall be made smooth, neat and in a good workmanlike condition. The existing brick table shall be rebuilt to meet the new invert. The Contractor may elect to core a new channel-in the existing brick table if conditions permit. However, any failure or leakage that develops shall be repaired by the Contractor at his expense.

8.1.9 Leakage Testing

All newly installed sewers and appurtenant structures shall be made as nearly watertight as possible. Sewer mains and partial sewer service laterals shall be tested for leakage by an independent testing company approved by the Engineer other than the Contractor who installed the sewer main. Leakage testing procedures and allowances shall conform to ASTM Specification C924. Sewer mains or portions thereof which exceed the maximum allowable leakage shall be repaired and retested at the Contractor's expense until they comply with the ASTM specification. I Sewer manholes shall not show any evidence of leakage as determined by the Engineer. Manholes which are found to be leaking shall be repaired at the Contractor's expense.

8.1.10 Measurement and Payment

Measurement and payment for sewer pipe shall be based on the unit bid price per linear foot. Payment shall include all materials, labor, tools and equipment to remove the pavement (where necessary), excavate the trench, provide trench drainage (pumping), install bedding materials, lay and joint the pipe, cut the pipe to meet required lengths, install pipe fittings, safeguard and protect other utilities, backfill and compact the trench, dispose of surplus or unacceptable spoil and maintain the backfilled trench in accordance with these specifications and as shown on the contract plans or as directed by the Engineer.

Measurement and payment for concrete cradles or envelopes shall be based on the unit bid price per cubic yard. Payment shall include all form work, materials, labor, tools and equipment in order to provide the cradle or envelope complete and in place in accordance with these specifications and as shown on the contract plans or as directed by the Engineer.

Measurement and payment for chimneys shall be based on the unit bid price for each chimney installed. Payment shall include all materials, labor, tools and equipment required to provide the chimney complete and in place in accordance with these specifications and as shown on the contract plans or as directed by the Engineer.

Measurement and payment for connections of sewer mains to existing sewer stubs shall be based on the unit bid price for each connection made. Payment shall include all materials, labor, tools, and equipment required to locate the sewer, verify the invert elevation, excavate, and backfill to make the connection complete and in place in accordance with these specifications and as shown on the contract plans or as directed by the Engineer.

Measurement and payment for building connections shall be based on the unit bid price per linear foot. Payment shall include all materials, labor, tools and

equipment to remove pavement (where necessary), excavate the trench, provide trench drainage (pumping), install bedding materials, lay and joint the pipe, cut the pipe to meet required lengths, install pipe fittings, safeguard and protect other utilities, backfill and compact the trench, dispose of surplus or unacceptable spoil and maintain the backfilled trench in accordance with these specifications and as shown on the contract plans or as directed by the Engineer.

Measurement and payment for leakage testing shall be based on a lump sum basis. Payment shall include all leakage testing required under the contract including all phases thereof and any retesting which is required by the specifications.

Payment Items

		Unit
8.1.10a	PVC sewer pipe - 8 inch	Linear Foot
8.1.10b	PVC sewer pipe - 12 inch	Linear Foot
8.1.10c	Concrete Cradle or Envelope	Cubic Yard
8.1.10d	Chimney	Each
8.1.10e	Connection to Existing Sewer Stub	Each
8.1.10f	Connection to Existing Sewer Structures-Coring	Each
8.1.10g	Leakage Testing	Lump Sum

8.2 SEWER MANHOLES

8.2.1 General

The Contractor shall furnish all materials, labor, tools and equipment, make all earth excavations, install base materials, sewer structures, brick leveling courses, tables, frames and covers at the locations and elevations shown on the contract plans, make sewer structure to pipe connections, backfill, compact, dispose of all excess materials and do all appurtenant work in accordance with these specifications and as shown on the contract plans or as directed by the Engineer.

8.2.2 Foundation Requirements.

All sewer manhole structures shall be placed on a minimum 8 inch thick base layer of compacted gravel, type c, as specified in Section 5.6.1. The gravel base shall be compacted in one 8 inch lift and shall be level. The gravel base shall extend for a distance of at least 1 foot beyond the limits of the concrete base of the manhole structure. The Contractor shall be responsible to ensure that the base is set at the correct elevation to meet these specifications and the invert requirements on the contract plans.

8.2.3 Precast Reinforced Concrete Manhole Sections

The sewer manhole sections shall conform to the ASTM Standard Specification for Precast Reinforced Concrete Manhole Sections C478 Eccentric Cone or Flat Slab, Top and Base Riser Section with Integral Floor.

8.2.4 Manhole Joints

Manhole joints shall conform to ASTM C478 and shall be sealed using Butyl Rubber or Neoprene Rings and Portland Type II Cement Mortar.

8.2.5 Sewer Manhole Steps

Sewer manhole steps shall be installed in accordance with ASTM Specification C478.

8.2.6 Brick Leveling Courses

At least two layers and no more than five layers of a brick leveling course shall be constructed on top of the sewer manhole. All brick shall be sound, hard and uniformly burned brick, regular and uniform in shape and size, of compact texture and satisfactory to the Engineer. Rejected brick shall be immediately removed from the work site.

The bricks shall be clean and thoroughly wetted shortly before use and each brick shall be laid in a full bed and joint of mortar meeting MHD 4.02.15 and bonded. The brick shall be laid radically along its longitudinal axis around the manhole opening and shaped to adjust the pitch of the manhole frame and cover to match the cross-section and grade of the road as shown on the contract plans exactly.

8.2.7 Table and Channel Construction

A table and channel shall be formed of red sewer brick complying with ASTM Specification C32 and 4000 psi type II portland cement concrete meeting Massachusetts Highway Department (MHD) Specification M4.02.00 et seq. All brick shall be sound hard and uniformly burned brick, regular and uniform in shape and size, of compact texture and satisfactory to the Engineer. Rejected brick shall be immediately removed from the work and substituted with brick satisfactory to the Engineer.

Mortar for the brickwork shall be composed of type II portland cement, sand and water in accordance with MOPW Specification M4.02.15.

Bricks shall be clean and thoroughly wetted before being laid in a full bed and joint of mortar and bonded. Brick shall be protected against weather, water, sewage and/or frost until the mortar has set.

8.2.8 Pipe to Manhole Connections

Pipe to manhole connections shall be made at manufacturer- installed openings with rubberized boots. It is the Contractor's responsibility to coordinate with the manufacturer to obtain sewer manhole structures with the correct diameter openings, locations and elevations as shown on the contract plans. Sewer manholes which do not have the correct size, location or elevation opening(s) shall be recorded or replaced as determined by the Engineer at the Contractor's expense. All recording allowed by the Engineer shall conform to subsection 8.1.8 of these specifications.

8.2.9 Sewer Manhole Frames and Covers

Manhole frames and covers shall be heavy duty, 24 inch diameter, Marblehead Pattern as manufactured by E. L. LeBaron Foundry Company or approved equal. Each frame and cover shall have a minimum weight of 450 pounds and the cover shall be marked with the letter "S".

8.2.10 Drop Manhole Requirements

All drop manholes shall be constructed with an outside drop in accordance with these specifications and as shown on the contract plans or as directed by the Engineer. In rare or unusual circumstances, the Contractor may install an inside drop if approved in writing by the Engineer.

The drop shall be made using a wye fitting and a two (2) foot radius sweep. All fittings shall be the same diameter as the sewer main to which they are connected. The pipe wall of the drop shall be at least two feet away from the wall of the structure and shall be encased in 3000 psi type II portland cement concrete meeting MHD Specification M4.02.00 et seq.

8.2.11 Rebuilding Existing Structures

When the line or grade or both the line and grade of the structure changes by six (6) inches or less, the structure shall be adjusted to the proposed line and grade (See Section 9.1.6 Casting Adjustments).

When the line or grade or both the line and grade of the structure changes by more than six (6) inches, the structure shall be remodeled. The sloped and/or vertical masonry shall be removed and new masonry constructed to conform to the proposed design as shown on the contract plans or as directed by the Engineer.

When, in the judgment of the Engineer, the existing structure shows deterioration or is otherwise unsuitable for remodeling, the structure shall be replaced with a new structure meeting Section 8.2 Sewer Manholes of these specifications. Dog-house style manholes are not permitted.

Where a sewer manhole is indicated on the contract plans to be relocated, the contractor shall excavate the surrounding material outside the manhole and will excavate the new hole for relocation of the existing structure simultaneously. Sewer main replaced to meet the new location shall be constructed prior to the actual relocation of the existing structures and all private services connecting to that particular link in the main will be reconnected. The casting of the existing structure will be carefully removed to prevent damage and stored on -site until such time that resetting is needed. The contractor shall remove each section of the precast manhole separately and rebuild the sewer manhole in its new location from the bottom section up. Joints between precast sections will be made water tight with new butyl rubber sealing rings. The contractor shall reconnect the new main to the relocated manhole in accordance with the procedures as defined in applicable subsection of these specifications.

Prior to resetting any portions of the existing sewer manhole, the suitability of each section must be inspected and approved by the Engineer. If any precast portions of the existing sewer manhole are deemed to be unsuitable for reuse, the contractor will abandon the relocation efforts and will furnish and install a new manhole that meets the specification requirements of subsection 8.2 for new manholes.

Upon completion of reconnecting to the relocated manhole and backfilling of the excavation, the contractor will reset the salvage frame and cover.

8.2.12 Measurement and Payment

Measurement for furnishing and installing sewer manholes shall be based on a standard unit having a depth of 6 feet or less as indicated on the contract plans measured vertically at the center of the structure from the top of the cover to the invert of the finished channel.

Sewer manholes greater than the 12 ft. depth as measured above shall be considered special sewer manholes and shall be measured as complete units regardless of depth.

Payment shall be on a per unit basis and shall include all labor, materials, tools and equipment to excavate, provide drainage (pumping), install base materials, sewer manhole sections, flat slab tops (if required to meet design plan requirements), joints, brick leveling courses, channels (tables), pipe connections, manhole frames and covers at the locations and elevations shown on the contract plans, backfill,

compact, dispose of excess materials and maintain the backfill around the structure in accordance with these specifications and as shown on the contract plans or as directed by the Engineer.

Measurement and payment for relocating existing sewer manholes will be on a per unit basis and will include all labor, materials, tools, equipment and work necessary for the completion of the item. Excavation of the existing structure and for the relocated position of the existing structure are incidental to this item. Reconnection of the new main to the relocated sewer manhole and existing manhole to remain will be paid in accordance with sub section 8.1.10 of these specifications. Resetting the frame and cover, as well as removal and temporary storage are considered incidental to the relocation item.

Payment Items		Unit
8.2.12a	Sewer Manhole - 6 ft.	Each
8.2.12b	Sewer Manhole - 8 ft.	Each
8.2.12c	Sewer Manhole - 10 ft.	Each
8.2.12d	Sewer Manhole - 12 ft.	Each
8.2.12e	Special Sewer Manhole	Each
8.2.12f	Frame and Cover - Sewer	Each
8.2.12g	Drop Manhole - Sewer	Each
8.2.12h	Sewer Structure Remodeled	Each
8.2.12i	Sewer Structure Relocated	Each

8.3 BUILDING CONNECTIONS

8.3.1 General

The Contractor shall provide all materials, labor, tools and equipment, make all earth excavations, install bedding materials, lay, joint and connect all sewer service laterals at the locations and elevations shown on the contract plans, including connections to existing sewer laterals, backfill, compact, dispose of all excess materials and do all appurtenant work in accordance with these specifications and as shown on the contract plans or as directed by the Engineer.

Renewal of sewer service laterals shall consist of connecting to the existing main as specified in section 8.1.5, laying of new PVC sewer lateral as specified above and connection to the existing sewer lateral as shown on the construction plans as specified in section 8.1.5.

8.3.2 Connection at Sewer Main

Sewer service laterals shall be connected to the sewer main at a wye or a saddle wye. The wye shall be located at either the two o'clock or ten o’clock positions

and angled in the direction of the flow (see section 8.1.5). A bend fitting shall be used to adjust the alignment and grade of the service lateral to meet design requirements. The service lateral shall be four (4) inch SOR 35 PVC or other diameters approved by the Engineer. Schedule 20 or Schedule 40 PVC is not permitted. Joints shall be "ring-tite" and shall meet the same requirements specified in sub-section 8.1.4 The lateral's pipe slope shall be at least two (2) percent and shall have no angles or changes in direction except at the sewer main connection. The service lateral shall be bedded in gravel borrow, type c, and compacted to the satisfaction of the Engineer.

8.3.3 Connection at Building

Sewer service lateral connections to the building sewer shall comply with the Massachusetts Building Code. All sewer service laterals within ten (10) feet of the building wall (foundation) shall be cast iron or Schedule 40 PVC. Couplings as specified in Section 8.1.5 shall be used to connect pipes of different types.

8.3.4 Measurement and Payment

Measurement and payment for sewer service laterals shall be based on the unit price per linear foot. Measurement and payment for renew sewer service laterals shall be based on the contract unit price per each. Payment shall include all materials, labor, tools and equipment to provide sewer service laterals complete and in place in accordance with these specifications and as shown on the contract plans or as directed by the Engineer.

Payment Items		Unit
8.3.4a	Sewer Service Lateral	Linear Foot
8.3.4b	Renew Sewer Service Lateral	Each
8.3.4c	Sewer Service Lateral Insulation	Linear Foot

8.4 DEMOLITION AND ALTERATIONS

8.4.1 General

The contractor shall provide all materials, labor, tools and equipment to demolish, alter, remove, and dispose of existing facilities as indicated on drawings, as specified, and as directed by Engineer. Demolish and remove existing construction, utilities, equipment, and appurtenances without damaging integrity of existing structures, equipment, and appurtenances that are to remain.

Repair or remove items that are damaged. Repair and install damaged items at no additional compensation and to condition at least equal to that which existed prior to start of work. Exercise all necessary precautions for fire prevention. Make

acceptable fire extinguishers available at all times in areas where demolition work by burning torches is throughout progress of work. Proceed in such manner as to minimize spread of dust and flying particles and to provide safe working conditions for personnel.

Maintain circulation of traffic within area at all times during demolition operations.

Obtain permission from Engineer before abandoning or removing any existing structures, materials, equipment, and appurtenances.

Make necessary arrangements with and perform work required by utility companies and municipal departments for discontinuations or interruptions in services due to demolition work.

8.4.2 Demolition of Existing Pump Station

Two weeks prior to demolition the Contractor shall submit to Engineer for review, a demolition plan describing the proposed sequence, methods, and equipment for demolition and disposal of each structure. The Contractor shall coordinate with the Owner any equipment to be salvaged. Store equipment to be salvaged from relocation where directed by the Engineer and if necessary, protect from damage during work.

Confine apparatus, storage of materials, demolition work, new construction, and operations of workmen to areas that will not interfere with continued use and operations of entire facility. Provide and maintain lights, barriers, and temporary passageways for free and safe access.

Wet down work during demolition operations to prevent dust from arising. Provide maximum practicable protection from inclement weather from materials, equipment, and personnel located in partially dismantled structures. Provide shoring or bracing where necessary to prevent settlement or displacement of existing or new structures. Do not overload floors. Complete demolition work on upper levels before disturbing supporting members on lower levels.

Clean wet well and pump chamber of materials unsuitable for fill, where below-grade portions of structures are not indicated to be removed. Demolish foundation walls to a depth of not less than two-feet below existing ground level. Demolish wet well and pump chamber as indicated and specified.

Fill structures with acceptable solid fill resulting from removal operations and/or with sand to level of adjacent ground. Place and compact fill in accordance with applicable requirements. Do not place solid fill from removal operations above an elevation one-foot below final grade.

Cap or plug with brick and mortar, as indicated, pipes and other conduits abandoned due to demolition.

Materials, equipment, and appurtenances removed, that are not designated for relocation, become property of Contractor. Haul from site and dispose of at no additional compensation.

The Contractor shall protect or dig up, trees, cultivated hedges, lawns, shrubs, and plants which might be damaged by Contractor's operations, and temporarily replant and maintain. After construction operations have been substantially completed, replant as directed by the Engineer and maintain until growth is reestablished. If trees, cultivated hedges, shrubs, and plants are injured to such a degree as to affect growth or diminish their beauty or usefulness, replace at no additional compensation, by items at least equal to that existing at start of work. Trees which cannot be temporarily replanted and maintained are to be replaced with trees at least equal to that existing at start of work. Guarantee survival of trees and shrubs for 1 year after restoration is complete. Loam and seed lawns damaged by Contractor's operation, as specified.

8.4.3 Removal and Disposal of Existing A.C. Sewers

The contractor shall remove and dispose of asbestos cement (A.C.) sewer pipe as indicated on the contract drawings.

The Contractor must comply with all federal, state, and local regulations pertaining to the contract with regard to removal and disposal of A.C. sewer pipe. The regulations include:

1. OSHA: 29 CFR Part 1926.1011, Asbestos Construction Standards.

2. OSHA: 29 CFR Part 1910.1001, General Industry Standard for Asbestos.

3. OSHA: 29 CFR 1900 Series.

4. EPA: 40 CFR Part 61 Subparts A& M (revised Subpart B) NESHAPS.

5. DOT: 40 CFR Part 171-177, Hazardous Materials Regulations

6. ANSI Z88.2: 1980, Respiratory Protection Equipment

7. ANSI Z9.2: 1979, Fundamentals Governing the Design and Operation of Local Exhaust Systems.

8. MA DL1: 453 CMR Part 6.00 Removal, Containment or Encapsulation of Asbestos

9. MA DEP: 310 CMR Part 7.00 Air Pollution Control Regulations.

The fact that these regulations are not explicitly spelled out in these documents does not relieve the Contractor of the responsibility to comply with the above regulations.

The Contractor shall obtain the services of an asbestos abatement company licensed by the Commonwealth of Massachusetts Department of Labor and Industries.

8.4.4 Removal and Disposal of Existing Manholes

The Contractor shall remove and dispose of existing manholes as indicated on the Contract Plans. The contractor shall clean and return the frame and cover to the Owner.

8.4.5 Measurement and Payment

Measurement and Payment for the demolition of the existing pump station shall be based on a lump sum basis. Payment shall include, but not limited to all materials, labor, tools, and equipment necessary for removal of the existing building, de-energizing the existing pump station, disconnecting and plugging existing force main and gravity sewer, removal and disposal of demolition materials, loaming, seeding and landscaping as indicated on the contract plans and as specified and not specifically paid for under other items.

Measurement and payment for the removal and disposal of existing A.C. sewers shall be based on the unit bid price for linear foot of A.C. sewer removed and disposed of. Payment shall include all materials, labor, tools, and equipment to remove and dispose of existing A.C. sewers, complete in accordance with these specifications and as shown on the contract plans or as directed by the Engineer.

Measurement and payment for the removal and disposal of existing manholes shall be based on the unit bid price of manholes removed and disposed of. Payment shall include, all materials, labor, tools, and equipment excavated, backfill, clean and return frame and cover to the Owner and remove and dispose of existing manhole, complete in accordance with these specifications and as shown on the contract plans or as directed by the Engineer.

Payment Items		Unit
8.4.5a	Demolition of Existing Pump Station	Lump Sum
8.4.5b	Removal and Disposal of Existing AC Sewer	Linear Foot
8.4.5c	Removal and Disposal of Existing Manholes	Each

8.5 PIPELINE CLEANING AND TELEVISION INSPECTION

8.5.1 General

A. After cleaning, the sewer pipes shall be visually inspected by means of closed-circuit television. The inspection shall be recorded on DVD and printed TV inspection logs.

B. Pan and Tilt TV Camera: Specifically designed and constructed for inspection of sewer lines; equipped with a minimum of four light to allow a clear picture of the entire periphery of the pipe; operative in 100 percent humidity conditions; and equipped with manual or power winch, TV cable, powered rewinds or other devices that do not obstruct the camera view to move the camera through the line.

C. The video system shall be capable of producing picture quality acceptable to the Engineer.

D. The TV inspection equipment shall be equipped with a meter device to locate defects by measurement. Marking on the cable, or the like, which would require interpolation for depth of manhole, will not be allowed. Accuracy of the distance meter shall be acceptable to the Engineer.

E. If, during the inspection operation, the television camera will not pass through the entire manhole section, set up equipment so that the inspection can be performed from the opposite manhole. If again, the camera fails to pass through the entire manhole section, the inspection shall be considered complete and no additional inspection work will be required.

F. Television Inspection Logs: Printed location records clearly showing the location, in relation to an adjacent manhole of each infiltration point observed during inspection and other points of significance such as locations of building sewers, unusual conditions, roots, storm sewer connections, broken pipe, presence of scale and corrosion, and other discernible features.

G. Televising of sewer services must begin at either the sewer main connection or connection to house using a flexible television devise.

8.5.2 Cleaning and Disposal Requirements

A. The Contractor's attention is directed to the requirements set forth by the Commonwealth of Massachusetts, Department of Environmental Protection (MADEP) regarding "Special Wastes" and the proper disposal thereof. All waste materials and debris, as designated by the Owner and/or Engineer including but not limited to any pump station, sewers and associated structures,

or any portions thereof, including but not limited to sludge, grit sediment, dirt, sand, rock, grease, roots and other liquid, solid or slime-solid material contained therein, shall be considered, "Special Wastes".

B. Remove dirt, grease, rocks, sand, iron tuberculation and other materials and obstructions from the pipeline.

C. Pipeline Cleaning shall be performed by hydraulically propelled or high velocity jet cleaning equipment. Selection of equipment shall be based on such field conditions as access availability and type of debris to be removed.

D. Clean pipeline to restore a minimum of 95 percent of the original carrying capacity of the pipe, and suitably to permit lining of the pipeline.

E. The Contractor is required to test and dispose of any waste material removed from the pipeline in accordance with State and Federal requirements. Testing of waste material will be at the Contractor's expense.

F. The Contractor shall notify the Engineer of the proposed disposal location and requirements of that disposal facility to allow disposal of waste material.

G. The Contractor is required to store any waste material until all testing requirements of the proposed facility have been met and shall submit copies of all test results to the Engineer.

8.5.3 Cleaning Procedures

A. Sewer Cleaning: The designated pipelines shall be cleaned using hydraulically propelled or high velocity jet cleaning equipment. Selection of the equipment used shall be based on the conditions of the lines at the time the work commences. The equipment and methods selected shall be satisfactory to the Engineer. The equipment selected for cleaning shall be capable of removing dirt, grease, rocks, sand, iron tuberculation and other deleterious materials and obstruction from the pipelines.

B. Material Removal: All sludge, dirt, sand rocks, grease and other solid or semi-solid material resulting from the cleaning operation shall be removed at the downstream manhole of the section which could cause line stoppages.

C. Disposal of Materials: All solids or semi-solids resulting from the cleaning operations shall be removed from the site and disposed as specified

D. Cleaning Precautions: During all pipeline cleaning operations, satisfactory precautions shall be taken to protect the pipelines from damage that might be inflicted by the improper use of cleaning equipment. Whenever hydraulically

propelled cleaning tools, which depend upon water pressure to provide their cleaning force or any tools which retard the flow of water in the pipeline are used, precautions shall be taken to ensure that the water pressure created does not cause any damage or flooding to public or private property. The flow of sewage in the sewer lines shall be utilized to provide necessary pressures by hydraulic cleaning devices whenever possible. When additional quantities of water from fire hydrants are necessary to avoid delay in normal working procedures, the water shall be conserved and not used unnecessarily. No fire hydrant shall be obstructed in case of a fire in the area served by the hydrant nor shall a hydrant be used for the purpose described unless a vacuum break is provided.

E. Root Removal: All Roots shall be removed in by mechanical methods. Any visible roots shall be removed if required.

F. Pumping and flow bypassing: The Contractor shall supply the necessary pumps, conduits and other equipment to divert the flow of sewage around the pipeline section in which work is to be performed. Handling existing sewage flows and bypass pumping shall be in accordance with *Section 8.8 (maintaining existing flow)*.

G. Flow Control Precautions: Whenever flows in a sewer line are blocked, plugged or bypassed, sufficient precautions must be taken to protect the sewer lines from damage that might be inflicted by excessive sewer surcharging. Further, precautions must be taken to ensure that sewer flow control operations do not cause flooding or damage to public or private property being served by the sewers involved. Coordination with private property owners is required.

8.5.4 Field Quality Control

A. After recording on DVD the cleaned pipeline, any pipe not sufficiently cleaned shall be cleaned again to obtain satisfactory results at no additional cost to the Owner.

8.5.5 Submittals

A. Submit in accordance with Specification Section
Provide detailed plans and descriptions outlining cleaning and television inspection procedures and all provisions and precautions regarding the handling of existing sewage flows.

B. Provide two DVDs, one original and one copy, to document conditions following completion of the cleaning process.

C. Quality assurance

1. Perform general work in accordance with NASSCO recommended specifications for sewer collection system rehabilitation.

8.5.6 Qualifications

A. Pipeline Television Inspection and Cleaning Company: Company specializing in performing the work of this section with minimum of three years experience.

8.5.7 Measurement and Payment

1. The unit price to be paid for these items shall constitute full compensation for Cleaning and televising the sewer mains and services to be rehabilitated, as specified and directed by the Engineer. The unit price of Inspecting Sewer main and sewer services to be paid for under this item shall be measured by the linear foot as measured along the horizontal projection at the centerline from the beginning to the end of sewer main cleaned and inspected, as indicated on the Drawings and/or as directed by the Engineer.

2. The unit prices shall constitute full compensation for mobilization and demobilization; bypass pumping and controlling of existing sewage flows; cleaning of the sewer line and disposal of all debris in conformance with all local, state, and federal regulations; televising and recording sewer main and services (as necessary); and providing the appropriate number of recordings and type of media, as specified.

3. Water for the cleaning process will be supplied to the Contractor by the Owner. The Contractor must contact the Owner prior to use of any water for the Project.

Payment Items

		Unit
8.5.7a	Clean and TV Inspect Sewer Main before Rehabilitation (All Sizes)	Linear Foot
8.5.7b	Clean and TV Inspect Sewer Services before Rehabilitation (All Sizes)	Linear Foot
8.5.7c	Clean and TV Inspect Sewer Main after Rehabilitation (All Sizes)	Linear Foot
8.5.7d	Clean and TV Inspect Sewer Services after Rehabilitation (All Sizes)	Linear Foot

8.6 SEWER LINE CHEMICAL ROOT TREATMENT (FOAMING METHOD)

8.6.1 General

A. The intent of chemical root treatment is to kill tree roots in sanitary sewer lines and to inhibit root regrowth without damaging the trees, the environment, or the treatment plant.

B. Reference Specifications: The chemical root treatment material shall be EPA registered and labeled for use in sewer lines and acceptable to the state agencies having jurisdiction over its use.

C. The Contractor shall submit a specimen product label of the material to be used in chemical root treatment to the Engineer with his bid Dr Proposal.

D. All materials and mixing/application procedures for chemical root treatment shall be consistent with the latest standards, requirements, and recommendations of the manufacturer of the chemical root treatment material used.

8.6.2 Materials

A. The active ingredient for killing roots salt be a nonsystemic herbicide will kill roots at low concentrations but which will not permanently affect parts of the plant distant from the treated roots. The active ingredient must be spontaneously detoxified by natural chemical) biochemical processes following its use. Manufacturers' maximum user guidelines should always be observed.

B. The active ingredient for inhibiting root regrowth in sanitary sewer shall inhibit root cell growth on contact but shall not be transported so as to damage other portions of the plant. The material shall form a persistent chemical barrier suppressing the growth of root tips. The material shall be sufficiently stable under conditions of use to provide protection for twelve months but shall be subject to decomposition in wastewater treatment plants without disturbing plant processes.

C. To improve transportation of the active ingredients into root tissues, the root treatment material shall contain emulsifiers to degrease root masses and remove fat' acids from root tissue and surfactants to convert an aqueous solution of the root treatment agent into a volatile foam when using the proper aeration equipment. This method insures root treatment material is held in line until chemical reaction is complete and roots are fully exposed to chemical.

8.6.3 Precautions and Responsibility

A. The Contractors attention is directed to the safety requirements and precautions associated with the use of the root treatment material.

B. Tile Contractor is required to be knowledgeable of and in compliance with federal and state requirements relative to the root treatment material and its use. Compliance with federal and state law salt supersede compliance with the provisions of this contract.

C. Mixing and application of the root treatment material shall be done under the supervision of a state-certified pesticide (herbicide) applicator as required by law.

D. The Contractor shall use precautions for the protection of all persons, vegetation, animals, and property The Contractor is responsible for damage to private property and vegetation.

8.6.4 Preparatory Procedures

Root tips are the principal growth areas and are the surfaces most effectively penetrated by root treatment chemicals. When the root tips ate damaged or removed by sewer line cleaning, chemical treatment will be less effective. Consequently, no cleaning is recommended in lines prior to chemical root treatment unless extensive grease, root masses, or debris preclude proper application of the material,

8.6.5 Flow Control

Sewer service shall generally not be interrupted during root treatment. In situations where it is necessary to shut down upstream pumping stations or block/bypass upstream flows, the Contractor shall coordinate his activities with the Engineer and Owner and do the work at night or during periods of low flow (see SEWER FLOW CONTROL and TEMPORARY BYPASS PUMPING SYSTEMS).

8.6.6 Mixing Procedures

All materials shall be delivered to the site in undamaged, unopened containers bearing the manufacturer’s original label. Mixing of the root treatment material shall be done at the time of application. The water used shall be clear and free of add, alkali, oxidizing agents, oil, or other organic materials. Mixing water temperature shall be between 40F and 80F. Mixing of root treatment material with water must be accomplished immediately before injection of foam into sewer line.

8.6.7 Application Procedures

Where conditions permit, the volume of foam shall be sufficient to completely till the air space above the flow, manhole to manhole- In all cases, the volume of foam delivered to the sewer line shall be sufficient to attach to and permeate all root masses.

A. The hose insertion method is the most common and lowest risk method of foam application. The foam shall be applied at sufficient pressure to penetrate a minimum of 5 feet into service connections.

8.6.8 Root Removal

Removal of roots is a separate operation and is not included in the scope of root treatment (see SEWER Line CLEANING).

A. Biological decomposition of dead root tissue occurs faster in septic conditions. Removal of dead roots, where required, should be postponed as long as possible after chemical mat treatment to facilitate easier cleaning. Sewer line cleaning shall be scheduled no less than six weeks after root treatment.

B. Use of high-velocity jet machines and mechanical sewer cleaning tools will reduce the persistence of the growth inhibitor ingredient and is advisable only in situations where the cleaning is necessary.

8.6.9 Discharges of Effluent

A. Sanitary Sewers: The chemical root treatment material is not removed from the sewer and will travel to the treatment plant. Generally, the active ingredient for killing roots shall detoxify before reaching the treatment plant. The active ingredient for inhibiting root regrowth shall attach to pipe surfaces in the line being treated or enroute to the treatment plant. The amount of chemical root treatment material reaching the plant shall be negligible and no special precautions are required. Observe the manufacturer’s maximum use guidelines. Note: Large sewers directly upstream from the treatment plant may require special precautions. Prebid discussion is advised.

B. Storm Sewers: Chemical root treatment in storm sewers requires additional precautions and is a separate contract item. The Contractor shall comply with state regulations concerning discharges. The Contractor shall strive for Zero discharge regardless of state regulations allowing such discharges. The cost of filing fees for aquatic permits, when required, shall be paid by the Owner. Bypassing of flows and confinement or capture of effluent, where required, shall be at the expense of the Owner. Note: Prebid discussion is advised.

C. Combined Sewers and Overflows: The Contractor shall not be responsible for discharges caused by downstream overflows from the sanitary sewer system

into storm sewers or streams. The Engineer shall inform the Contractor of overflows or unusual conditions downstream of sewer lines designated of chemical root treatment.

8.6.10 Warranty

A. The Contractor shall provide to the Engineer a written guarantee that meets or exceeds any claims or warranties made by the Contractor in published advertising. As a minimum, the Contractor shall guarantee that, within a short interval of application, virtually all root tissue present in the sewer pipe will be dead or unable to sustain life.

8.6.11 Measurement and Payment

1. The unit price of Chemical Root Treatment to be paid for under this item shall be measured by the linear foot as measured along the horizontal projection at the centerline from the beginning to the end of sewer main inspected and subject to root removal, as indicated on the Drawings and/or as directed by the Engineer.

2. The unit price shall constitute full compensation for heavy cleaning, television inspection and root removal of sewer pipes, complete, as specified and directed, including all work incidental thereto and not specifically included for payment under other items.

3. The unit price for this item shall include full compensation for: mobilization and demobilization; bypass pumping and controlling of existing sewage flows; cleaning and televising the sewer line before and after the installation of the cured-in-place point repair; re-instatement of all sewer service connections; and all other work incidental to the installation of the chemical root treatment.

Payment Items

		Unit Price
8.6.11a	Chemical Root Treatment sewer	Linear Foot

8.7 SEWER PIPE JOINT TESTING AND SEALING

8.7.1 General

A. Sewer pipe joint testing and sealing using the internal pipe joint sealing process.

8.7.2 Manufacturers

1. Avanti International, Webster, Texas.
2. 3M, St. Paul, Minnesota.
3. Acceptable equivalent product.

8.7.3 Materials

A. Chemical Sealant Material (Grout):

1. Cured Material: Flexible as opposed to brittle; capable of withstanding freeze/thaw and wet/dry cycles without adversely affecting the seal; capable of withstanding submergence in water without degradation; capable of preventing the passage of water (infiltration) through the sewer pipe joint; and chemically stable and resistant to the mild concentrations of acids, alkalis, and organics found in normal sewage.

2. Mixing of the component materials shall be compatible with field operations and not require precise measurements of the ingredients by field personnel.

3. Residual sealing materials must be easily removable from the sewer line to prevent reduction or blockage of the sewage flow.

4. Herbicide must be an integral part of the chemical sealant material for root control.

8.7.4 Preparation

A. Bypass sewage flow to allow performance of work. Provide the necessary pumps, conduits and other equipment to divert the flow of sewage around the pipeline section in which work is to be performed. Handling existing sewage flows and bypass pumping shall be as specified in *Section 8.8 Maintaining Existing Flow.*

B. Clean sewer lines as specified in *Section 8.5 Pipeline Cleaning and Television Inspection*.

C. Remove dirt, grease, rocks, sand and other materials and obstructions from the sewer lines to allow proper testing and sealing. All solids or semi-solids resulting from the cleaning operations shall be removed from the site and disposed as specified in General Conditions.

D. Remove all line obstructions that will prevent Testing and Sealing. Cut protruding services flush with the main pipe and grout to ensure proper seal with sewer main and service connection. If conventional sewer rehabilitation equipment cannot remove an obstruction, then the Contractor shall notify the

Engineer.

8.7.5 Joint Testing

A. Each sewer pipe joint which is not visibly leaking shall be individually tested at the specified test pressure in accordance with one of the specified procedures.

B. The basic equipment used shall consist of a television camera, joint testing device (such as a packer), and test monitoring equipment. The equipment shall be constructed in such a way as to provide means for introducing a test medium, under pressure, into the void area created by the expanded ends of the joint-testing device and a means for continuously measuring the actual static pressure of the test medium within the void area only.

C. All test monitoring shall be above ground and in a location to allow for simultaneous and continuous observation of the television monitor and test monitoring equipment by the Engineer.

D. Prior to starting the pipe joint testing phase of the work, a two-part control test shall be performed as follows:

1. To insure the accuracy, integrity, and performance capabilities of the testing equipment, a demonstration test will be performed in a test cylinder constructed in such a manner that a minimum of two known leak sizes can be simulated. This technique will establish the test equipment performance capability in relationship to the test criteria and insure that there is no leakage of the test medium from the system or other equipment defects that could affect the joint testing results. If this test cannot be performed successfully, the Contractor shall repair or otherwise modify his equipment and re-perform the test until the results are satisfactory to the Engineer. This test may be required at any other time during the joint testing work if the Engineer suspects the testing equipment is not functioning properly.

2. After entering each manhole section with the test equipment, but prior to the commencement of joint testing, the test equipment shall be positioned on a section of sound sewer pipe between pipe joints, and a test performed as specified. This procedure shall demonstrate the reality of the test requirement, as no joint will test in excess of the pipe capability. Should it be found that the barrel of the sewer pipe will not meet the joint test requirements, the requirements will be modified as necessary.

E. Joint testing shall be by one of the following procedures:

1. Liquid Test Procedure:

a. The testing device shall be positioned within the line in such a manner as to straddle the pipe joint to be tested.

b. The testing device end elements (sleeves) shall be expanded so as to isolate the joint from the remainder of the line and create a void area between the testing device and the pipe joint. The ends of the testing device shall be expanded against the pipe with sufficient inflation pressure to contain the test liquid within the void without leakage past the expanded ends.

c. Water or an equivalent liquid shall then be introduced into the void area until a pressure equal to or greater than the required test pressure is observed with the void pressure monitoring equipment. If the required test pressure cannot be developed (due to joint leakage), the joint will have failed the test and shall be sealed as hereinafter specified.

d. The flow rate of the test liquid shall then be regulated to a rate at which the void pressure is observed to be the required test pressure. A reading of the test liquid flow meter shall than be taken. If the flow rate exceeds 1/4 gallon per minute (due to joint leakage), the joint will have failed the test and shall be sealed as hereinafter specified.

2. Air Test Procedure:

a. The testing device shall be positioned within the line in such a manner as to straddle the pipe joint to be tested.

b. The testing device end elements (sleeves) shall be expanded so as to isolate the joint from the remainder of the line and create a void area between the testing device and the pipe joint. The ends of the testing device shall be expanded against the pipe with sufficient inflation pressure to contain the air within the void without leakage past the expanded ends.

c. Air shall then be introduced into the void area until a pressure equal to or greater than the required test pressure is observed with the void pressure monitoring equipment. If the required test pressure cannot be developed (due to joint leakage), the joint will have failed the test and shall be sealed as hereinafter specified.

d. After the void pressure is observed to be equal to or greater than the required test pressure, the air flow shall be stopped. If the void pressure decays by more than 2 psi within 15 seconds (due to joint leakage), the joint will have failed the test and shall be sealed as hereinafter specified.

F. Test Pressure:

1. Joint test pressure shall be 3 psi higher than the groundwater pressure, if any, outside the pipe. Groundwater pressure may be determined by positioning the testing device on a visibly infiltrating joint and measuring the resulting void pressure with the void pressure monitoring equipment.

2. In the absence of groundwater pressure data, the test pressure shall be equal to 1/2 psi per vertical foot of pipe depth or 3 psi, whichever is greater.

8.7.6 Joint Sealing

A. Joints showing visible leakage, or joints that have failed the joint test specified, shall be sealed as specified.

B. Joint sealing shall be accomplished by forcing chemical sealing materials into or through faulty joints by a system of pumps, hoses, and sealing packers. Jetting or driving pipes from the surface that could damage or cause undermining of the pipe lines shall not be allowed.

C. The basic equipment shall consist of a closed-circuit television system, necessary chemical sealant containers, pumps, regulators, valves, hoses, etc., and joint sealing packers for the various sizes of sewer pipes. The packer shall be cylindrical and have a diameter less than the pipe size and have cables attached at each end to pull it through the line. The packer device shall be constructed in a manner to allow a restricted amount of sewage to flow. Generally, the equipment shall be capable of performing the specified operations in lines where flows do not exceed the maximum line flows for joint testing/sealing as recommended in NASSCO's Recommended Specifications for Sewer Collection System Rehabilitation.

D. The packer shall be positioned over the faulty joint by means of a measuring device and closed-circuit television camera in the line. The packer ends shall be expanded using controlled pressure. The expanded ends shall seal against the inside periphery of the pipe to form a void area at the faulty joint, now completely isolated from the remainder of the pipe line. Into this isolated area, sealant materials shall be pumped through the hose system at controlled pressures which are in excess of groundwater pressures. The pumping unit, metering equipment, and the packer device shall be designed so that proportions and quantities of materials can be regulated in accordance with the type and size of the leak being sealed.

E. Residual sealing materials that extend into the pipe, reduce the pipe diameter,

or restrict the flow shall be removed from the joint. The sealed joints shall be left reasonably flush with the existing pipe surface. If excessive residual sealing materials accumulate in the line, the manhole section shall be cleaned to remove the residual materials.

F. Upon completing the sealing of each individual joint, the packer shall be deflated until the void pressure meter reads zero pressure, then re-inflated and the joint retested as specified. Should the void pressure meter not read zero, the Contractor shall clean his equipment of residual grout material or make the necessary equipment repairs/adjustments to produce accurate void pressure readings. Joints that fail to meet the specified test criteria shall be resealed and retested until the test criteria can be met.

8.7.7 Testing and Sealing Records

A. Complete records shall be kept of joint testing and sealing performed in each manhole section. The records shall identify the following information:

1. Identification of the manhole section tested.
2. The test pressure used.
3. Location (footage) of each joint tested and/or sealed.
4. Test results for each joint tested.
5. Sealing verification results for each joint sealed.

B. Record on DVD all testing and sealing activities inside the sewer pipe. All DVD's and necessary playback equipment shall be readily accessible for review by the Engineer during the project, after which time a copy of each DVD shall be provided as per General Conditions.

8.7.8 Lateral Testing and Sealing

A. Air testing laterals is accomplished by isolating the area to be tested with the packer and applying positive pressure into the isolated void area. A sensing unit is used for continuous monitoring of the void pressure. This sensing unit is located within the void area and accurately transmits pressure readout to the control panel.

B. The test procedure consists of applying air pressure into each isolated void area. To isolate a void, the lateral sealing packer is positioned straddling the lateral. The operator inflates the packer ends to isolate the lateral and inserts an inflatable inversion tube. Once the designated pressure in the isolated void is displayed on the meter of the control panel, the application of air pressure is stopped and a twenty-second waiting period commences. The void pressure is observed during this period. If the void pressure drop is greater than that allowed in the following Air Test Table, the lateral is considered to have failed

the air test and shall be grouted.

Air Test Table

Initial Void Pressure (psi)	Void Pressure After 20 Seconds (psi)
12 - 11	4.8 - 4.4
11 - 10	4.4 - 4.0
10 - 9	4.0 - 3.6
9 - 8	3.6 - 3.2
8 - 7	3.2 - 2.8
7 - 6	2.8 - 2.4
6 - 5	2.4 - 2.0

C. After completing the air test for each individual lateral, the lateral packer is deflated, with the void pressure meter continuing to display void pressure. If the void pressure does not drop to approximately zero, the equipment is adjusted to provide a zero void pressure reading at the monitor.

D. Lateral sealing begins if the lateral does not pass the air test as described above. The lateral packer remains in position, maintaining the isolated void. Chemical grout sealant is pressure injected through the lateral packer into the annular space between the inversion tube and the lateral pipe. Under pressure, the grout material is then forced out into the soil through leaking joints and pipe defects.

E. The amount of chemical grout pumped is based on the number of pump strokes delivered to each lateral. The number is recorded on the sealing log.

F. Upon completion of the lateral sealing procedure the lateral is air tested a second time to verify the sealing of the connection. The air test is the same as outlined above. If the lateral fails the air test a second time, the grouting procedure is repeated. This sequence of air testing, grouting, and subsequent air testing is repeated until either the lateral is sealed or it is determined that the grout consumption is too high and, may result in the blockage of the lateral pipe. The final determination to stop subsequent attempts to seal a lateral will be made by the Engineer.

G. Lateral flow is verified after the successful sealing of each lateral. With the lateral packer in position, the inversion tube is retracted and air pressure is injected into the lateral. Should a pressure build in the lateral and not drop to approximately zero in a few seconds, the packer is moved off the connection and the connection is viewed with a television camera. With the camera viewing the connection point, an attempt is made to obtain a water flush by the occupant. If no water is viewed during this procedure, it is assumed the building sewer is blocked with grout. The Contractor shall be responsible to

locate the blockage and restore lateral flow to the service, at no additional cost to the Owner.

H. The Contractor shall leave a notification form with the homeowner stating their lateral sewer service has been restored.

I. The complete procedure is videotaped during the air testing and sealing operation. The videotapes are submitted to the Engineer on a DVD format for review and permanent record. The video shall display the date, manhole numbers, footage to the lateral, and void pressure readout. In addition, the data obtained during this operation shall be recorded on a lateral testing and sealing log provided by the Contractor.

8.7.9 Inspection

A. Within a period of not less than 6 months and not more than 12 months after Testing and Sealing each section of pipe and laterals, the Contractor shall conduct a television inspection of all locations. The Contractor shall notify the Engineer when the television inspection will take place. The television inspection shall include a pan-and-tilt inspection of all areas that were sealed. Copies of the sets of DVD's produced from this television inspection shall become the property of the Owner.

8.7.10 Warranty

A. The Contractor shall make all necessary repairs and replacements to remedy, in a manner satisfactory to the Engineer and at no cost to the Owner, any and all defects, breaks, or failures of the work occurring within one (1) year following the date of acceptance of the work due to faulty or inadequate materials or workmanship so long as the pipe service remains within initial project design parameters.

B. Except as otherwise specified, all work shall be guaranteed by the Contractor against defects resulting from the use of inferior materials, products, equipment, or workmanship for one (1) year from the date of final completion of the Contract.

8.7.11 Submittals

A. Submit under provisions of General Conditions.

B. Product Data: Indicate physical and chemical characteristics, technical

specifications, limitations and general recommendations regarding each material.

C. Submit an outline of the procedures proposed to accomplish the work. Include a detailed description of the methods and equipment to be used for each operation.

D. TV Inspection Logs: Provide printed TV inspection logs as hereinafter specified.

E. Testing and Sealing Records: Provide printed testing and sealing records as hereinafter specified.

F. Videotapes: Visual and audio record documenting TV inspection of conditions prior to testing and sealing, and testing and sealing operations inside the pipe.

8.7.12 Qualifications

A. Testing and Sealing: Company specializing in performing the work of this section with minimum five (5) years documented experience.

8.7.13 Delivery, Storage and Handling

A. Deliver, store, protect and handle products to site under provisions of General Conditions.

B. Comply with instructions for storage, shelf life limitations and handling.

8.7.14 References

A. NASSCO Recommended Specifications for Sewer Collection System Rehabilitation.

B. ASTM F2304-03 Standard Practice for Rehabilitation of Sewers Using Chemical Grouting

C. ASTM F2454-05 Standard Practice for Sealing Lateral Connections and lines from the mainline Sewer Systems by the Lateral Packer Method, Using Chemical Grouting

8.7.15 Measurement and Payment

1. Measurement and payment for sewer main testing and sealing *Item 8.7.15a* shall be based per linear foot of pipe.

2. Measurement and payment for sealing of wyes Payment *Item 8.7.15b* shall

be based on the unit price per each. The unit price to be paid for under Payment *Item 8.8.15b.* shall be measured by the number of services, all sizes, sealed using chemical grout.

3. Cut gasket or lateral flush with the inside of the pipe using a mechanical cutting head deployed through the sewer. Measurement and payment for each of these items shall be per each item.

4. Payment shall include all materials, labor, tools and equipment to provide sewer service laterals complete and in place in accordance with these specifications and as shown on the contract plans or as directed by the Engineer.

5. The unit prices for these items shall constitute full compensation for testing and sealing sewer pipe joints and laterals, complete, as indicated and specified; including pipe cleaning; chemical grout; root removal; mobilization and demobilization; staging set-up and breakdown; bypass pumping and controlling of existing sewage flows; bypassing individual service connections if required due to high service flows as approved by Engineer; traffic control requirements; resident notification requirements; and including all work incidental thereto and not specifically included for payment under other items.

6. Water for the cleaning and curing process will be supplied to the Contractor by the Owner. The Contractor must contact the Owner prior to use of any water for the Project.

Payment Items		Unit
8.7.15a	Sewer Main Testing and Sealing	Linear Foot
8.7.15b	Sealing of Wyes	Each
8.7.15c	Cut Sewer Gasket	Each
8.7.15d	Cut Protruding Lateral	Each

8.8 MAINTAINING EXISTING FLOW

8.8.1 General

A. This section Includes requirements to maintain existing sewerage flow and to implement and complete all flow diversions and bypass pumping required to

complete all Work.

B. This section shall include the installation of temporary sewer force main in Richardson Drive. The Contractor will be responsible for the drainage of the pump station, temporary backup sewer storage, installation and removal of the temporary bypass, all connections and disconnections to existing sewer system, burial of service under pavement, installation and removal of the relief valve, and ramping at driveways.

8.8.2 Performance

A. It is essential that the Contractor maintain the existing sewerage flow so that there will be no interruption of the wastewater flow throughout the duration of this project. An interruption shall be considered, but may not be limited to, any condition that in the sole opinion of the Engineer adversely affects or alters operation of the existing sewage system and/or any other portion or component of the existing pump station including the associated sewage flows; allows the level of sewage flow to increase, rise, collect, surcharge and/or overflow existing facilities in any manner; or results in any operational or permit violations being issued to the Owner.

B. The Contractor shall maintain, and operate temporary facilities such as dams, bulkheads, pumping equipment (both primary and backup units as required) conduits, electrical power, and all other labor and equipment to intercept and maintain the existing sewage flow before it reaches the point where it would interfere with his work, carry it past his work, and return it to the existing facilities beyond his work.

C. The Contractor's attention is directed to the fact that the existing wastewater flow may be affected by high groundwater and rainfall. Increases in normal flow should be expected during periods of wet weather. The Contractor shall therefore take all precautions necessary including monitoring weather forecasts to fully accommodate, control and sufficiently handle the increases in flow during periods of wet weather and/or storms as well as periods of normal flow.

D. The Engineer may prohibit the carrying out of any work at any time when in his sole judgment, increased flow conditions are unfavorable or not suitable, or at any time, regardless of the existing flows, when proper precautions are not being taken to safeguard the existing sewerage system, previously constructed work, work in progress and/or the general public.

E. In case of damage caused by the failure of the Contractor to take adequate precautions, the Contractor shall repair or replace equipment damaged and shall make such repairs or rebuild such parts of the damaged work, as the Owner may require, at no additional expense to the Owner.

8.8.3 Submittals

A. Submit detailed plans and descriptions outlining all provisions and precautions to be taken regarding the control and handling of existing sewage flows. Submission shall include such items as schedules, locations, elevations, capacities of equipment, materials, traffic maintenance plans, and all other incidental items necessary and/or required by the Owner to insure proper protection of the facilities and compliance with the requirements herein specified.

B. Submit qualifications as described herein.

C. Submit detailed proposal for noise prevention measures for review of at least thirty (30) consecutive calendar days prior to anticipated usage.

D. Submit shop drawings for all pumping, piping, and appurtenances for type and size of equipment required to perform the flow diversion and/or bypass pumping work as required herein.

E. The Engineer reserves the right to limit and/or otherwise restrict the Contractor's overall proposal and/or operations without claim should the Engineer deem it to be in the Owner's or publics best interest to do so.

8.8.4 Quality Assurance

A. Contractor shall have completed a minimum of five (5) bypass operations of similar capacity and for durations of not less than two (2) weeks each.

8.8.5 Equipment

A. At a minimum, all equipment shall be supplied in duplicate for emergency situations. Provide adequate on-line backup facilities so that no interruption in service is encountered. Equipment and installation are subject to the approval of the Owner and the Engineer.

B. All pumping units (primary and secondary) and appurtenances shall be sized properly to handle the flows encountered including increased flows due to wet weather.

C. All piping systems (primary and secondary) and appurtenance shall be sized properly to handle the flows encountered including increased flows due to wet

weather.

D. Include power generating facilities capable of providing all power necessary to operate any primary and secondary pumping systems in the event that primary power is lost. Maintain facility to be ready for use if required.

E. Noise prevention measures for all equipment shall be used to insure minimum noise impact on surrounding areas.

1. Measures may include but shall not be limited to insulation, electric pumping units, and hospital grade silencers or mufflers.

2. Noise shall be kept to a minimum particularly if any night, Saturday, Sunday or holiday work be deemed necessary by the Engineer for work under this Contract.

3. Should at any time prior to or during the performance of above mentioned work, the Engineer determines the noise prevention measures being used are not adequate, the Contractor shall at no additional cost to the Owner suspend all work until acceptable measures are incorporated.

8.8.6 Installation

A. Keep the Engineer advised at all times of any changes made to the overall operation(s) to accommodate field conditions.

B. Flow diversions and/or bypass pumping shall be maintained at all times as long as it is necessary to maintain the flow through the limits of the project during construction.

C. Maintain auxiliary and/or emergency equipment at the site to continue flow division and/or by-pass pumping operations in the event of a breakdown and/or loss of normal power.

D. No work shall begin until all provisions and requirements of this Section have been reviewed and approved by the Engineer.

E. The Engineer reserves the right to limit and/or otherwise restrict the Contractor's overall activities and/or operations at any time without claim should the Engineer deem it to be in the Owner's or publics best interest to do so.

8.8.7 Measurement and Payment

All costs of Contractor labor, equipment and materials for *maintaining existing flow* shall be paid for in lump sum under the bid item *8.8.7a Sewer Force Main Bypass*. The lump sum shall include all connections, disconnections, installation, maintenance, and removal of temporary force main.

Payment Items		Unit Price
8.8.7a	Sewer Force Main Bypass	LS

8.9 DISPOSAL OF SPECIAL WASTES

8.9.1 General

The Contractor's attention is directed to the requirements set forth by the State of Massachusetts, Department of Environmental Protection, (MA DEP) regarding "Special Wastes" and the proper disposal thereof. All waste materials and debris, as designated by the Owner and/or Engineer, including but not limited to any sewers, storm drains, catchbasins, and combined system pipelines and associated structures, or any portions thereof, including but not limited to sludge, grit, sediment, dirt, sand, rock, grease, roots and other liquid, solid or semi-solid materials contained therein, shall be considered "Special Wastes." In addition, any excavated soils contaminated in any manner, as designated by the Owner and/or Engineer, shall also fall under this category and shall be handled the same. When so encountered, all such materials and debris shall be removed to the extent so ordered by the Engineer and properly disposed of in strict compliance with the requirements of the MA DEP and other regulating authorities to an approved and certified waste disposal site. It shall remain the sole responsibility of the Contractor to apply for and obtain all required permits, bonds and/or insurance relative to such disposal.

The Contractor shall also pay all costs associated with the disposal, required permits, bonds and insurance with no additional expense to the Owner. All handling of such "Special Waste" shall be done in strict compliance with the MA DEP requirements and/or any other federal, state or local agency having jurisdiction or authority over the same. Under no circumstances shall sewage, solids or other "Special Wastes" removed from the sewer lines be dumped or spilled onto the streets or into ditches, catch basins or storm drains. The Contractor must use watertight and State approved vehicles in transporting any wastes as hereinbefore designated.

The Contractor shall indemnify and save harmless the Owner and Engineer and all persons acting for or on behalf of the Owner and Engineer from all claims and liability of any nature or kind, and all damages, costs and expenses, including attorney's fees and penalties, arising from the improper handling, transportation or

disposal of "Special Wastes" as determined by the MA DEP and/or any other federal, state or local agency having jurisdiction or authority over the same.

8.9.2 Measurement and Payment

The quantity of “Special Wastes” to be paid for under this item shall be equal to the actual amount of “Special Wastes” properly disposed of, measured by the cubic yard, complete, and as directed by the Engineer.

The unit price for this item shall constitute additional compensation for proper disposal of Special Waste classified as “Hazardous Waste” or “Containing Heavy Metals”, as directed by the Engineer.

Payment Items	Unit
8.9.2a Disposal of Special Wastes	Cubic Yard

8.10 MANHOLE SEALING AND COATING

8.10.1 General

This section includes specifications for replacing missing, loose, or broken brick masonry, and mortar joints, and patching all holes, voids, and spalled areas, and the sealing of the manhole to eliminate infiltration.

8.10.2 Materials

A. Brick

1. Sound, hard and uniformly burned brick, regular and uniform in shape and size, of compact texture, and satisfactory to the Engineer. Brick shall comply with ASTM C32 and AASHTO M91 for sewer brick type S.S.

2. Rejected brick shall be immediately removed from the work.

B. Mortar for Brickwork

1. Composed of portland cement, hydrated lime, and sand in which the volume of sand shall not exceed three times the sum of the volume of cement and lime. The proportions of cement and lime shall be 4:1.

2. Cement shall be Type II portland cement conforming to ASTM C150.

3. Hydrated lime shall be Type S conforming to ASTM C207. Hydrated lime shall be "Mortaseal" manufactured by US Gypsum, "4X Hydrate"

manufactured by the New England Lime Company or an acceptable equivalent product.

4. Sand shall conform to ASTM C144.

C. Patching Material

1. A quick-setting, corrosion resistant cementitious material shall be used as a patching material and is to be mixed and applied according to manufacturer's recommendations and shall have the following minimum requirements:

A.	Compressive Strength	ASTM C109	1400 psi, 6 hours
B.	Bond	ASTM C321	psi, 28 days
C.	Cement		sulfate resistant
D.	Applied Density		105 pcf ± 5 lbs.
E.	Shrinkage	ASTM C596	0% @ 90% R.H.

The patching material shall be SprayWall, Strong Seal Systems, or an acceptable equivalent.

D. Infiltration Control Material

1. A rapid-setting cementitious product specifically formulated for leak control shall be used to stop minor water infiltration and shall be mixed and applied according to manufacturer's recommendations and shall have the following minimum requirements:

A.	Compressive Strength (2-inch cubes)	ASTM C109	1 hour…..400-600 psi 24 hours….2000-2400 psi
B	Expansion	ASTM C827	1 day…. .10%
C.	Freeze/Thaw	ASTM C827 "method A"	no weight loss after 15 cycles @ 2000 ppm, test continuing.
D.	Pull out strength	ASTM C234	14,000 pounds
E.	Placement time		< 60 seconds

The infiltration control material shall be Strong Seal Systems or an acceptable equivalent product.

E. Grouting Material

1. Chemical Sealing Materials shall be made of Acrylamide base gel and shall meet or exceed the following requirements:
   a. A minimum of 10% acrylamide base material by weight in the total sealant mix, higher concentration (%) of acrylamide base material may be used to

increase strength or offset dilution during injection. The ability to tolerate some dilution and react in moving water during injection.

b. A viscosity of approximately 2 centiposie which can be increased with additives.
c. A constant viscosity during reaction period.
d. A controllable reaction time from 10 seconds to 1 hour.
e. A reaction (curing) which produces a homogeneous, chemically nonbiodegradable gel.
f. The ability to increase mix viscosity, density and gel strength by the use of additives.

The Chemical sealing materials shall be AV100 Grout by Avanti International, Webster, TX, or an acceptable equivalent product.

E. Liner Material

1. An acid resistant calcium almuninate cementious liner product shall be used to form a structural/structurally enhanced monolithic liner covering all interior substrate surfaces and shall have the following minimum requirements at 28 days:

a.	Compressive strength	ASTM C109	>9000 psi
b.	Tensile strength	ASTM C496	>800 psi
c.	Flexural strength	ASTM C293	>1200 psi
d.	Shrinkage @ 95% R. H.	ASTM C596	0%
e.	Bond	ASTM C882	>1600 psi
f.	Applied density		150 pcf ± 5 lbs.
g.	Freeze/Thaw	ASTM C666	300 cycles, no damage

2. The liner material shall be made with 100% calcium aluminate cement and calcium aluminate aggregates and shall be used according to manufacturer's recommendations for use where harsh hydrogen sulfide conditions exist within the municipal sanitary system. The liner material shall be manufactured by Strong Seal Systems or an acceptable equivalent product.

F. Corrosion Protection Material

1. An epoxy top coat shall be used to provide corrosion protection to surfaces that have been properly prepared and where deterioration has occurred. The Epoxy Top Coat shall meet the following minimum specifications and standards:

a.	Tensile Properties of Plastics	ASTM –D638	7,500 psi
b.	Flexural Properties of unreinforced and reinforced plastics	ASTM-D790	10,000 psi

c.	Pull off strength of coatings using a portable adhesion tester	ASTM-D-4541	Concrete Fails
d.	Volatile Matter Content	ASTM-D2584	0%
e.	Durometer Hardness, Type D	ASTM-D2240	>82%
f.	Resistance of Plastics to chemical Reagents	ASTM-D543	
g.	The published Standard of The American Society of Testing and Materials, West Conshohocken, PA	ASTM	
h.	The Published Standard of National Association of Corrosion Engineers (NACE International) Houston, TX	NACE	
i.	The Published Standards of the Steel Structures Painting Council, Pittsburgh, PA	SSPC	

2. The airless spray equipment shall be specifically designed to accurately ratio and apply the Epoxy Top Coat lining materials and must be approved by the manufacturer.

8.10.3 Execution

A. Manhole sealing includes:

1. Cleaning; surface preparation; stopping active leaks; applying patching compound to all holes and voids around steps, joints, inverts, bench, pipes and all spalled areas; replacing missing bricks; and repointing all missing and loose mortar joints.

2. Applying coating compound and cementitious coating system to invert, bench, walls cone, corbel and chimney.

B. Examination

1. Verify that surfaces are ready to receive work.

2. Beginning of installation means acceptance of existing surfaces.

C. Preparation

1. Bypass sewage flow to allow performance of the work. Provide the necessary pumps, conduits, and other equipment to divert the flow of sewage around the manhole in which work is to be performed. Handling existing sewage flows and bypass pumping shall be as specified in Section 8.8.

2. Prepare surfaces in accordance with mortar and coating manufacturer's instructions.

3. Clean all concrete and masonry surfaces to be rehabilitated. Completely remove all sewage residue, grease, oil, laitance, coatings, loose bricks, mortar, unsound concrete and other foreign materials. Remove all cracked or disintegrated material to expose a sound subbase.

4. All cracks not subject to movement and greater than 1/16 inch wide shall be routed out to a minimum width and depth of 1/2 inch.

5. Remove and dispose of all solids and semi-solids resulting from the preparation operations.

6. The primary means of cleaning the manhole shall be water blasting using high pressure water only. Other methods such as dry sandblasting, acid wash, concrete cleaners, degreasers or mechanical means may be required to properly clean the surface. All surfaces on which these other methods are used shall be thoroughly rinsed, scrubbed, and neutralized to remove cleaning agents and their reactant products.

7. Water blast equipment shall utilize a minimum pressure of 5,000 psi and be capable of providing up to 10,000 psi of pressure when required. Muriatic acid (hydrochloric acid) solution, if used, shall be one part acid to ten parts water and shall be applied by spraying from above the manhole.

8. After surface preparation and prior to application of mortars and coatings, infiltration shall be stopped by either plugging, chemical grout sealing, or channeled through "bleed" pipes installed at the bottom of the manhole.

D. Chemical Grout Sealing

1. At each point of leakage within the manhole structure a hole shall be drilled from within the manhole and shall extend through the entire wall or base. In cases where there are multiple leaks around the circumference of the manhole, fewer holes may be drilled, providing all leakage is stopped from these holes.

2. Install grout ports or sealant injection devices in these previously drilled holes in such a way as to provide a watertight seal between the holes and the injection device.

3. Inject chemical grout into the installed ports under pressure using

equipment appropriate for the particular application. The injection equipment shall consist of chemical pumps, chemical containers, injection packers, hoses, valves, and all necessary equipment required to seal manholes. The chemical injection pumps shall be equipped with pressure meters that will provide for monitoring pressure during injection of the chemical grout.

4. Continue injection of grout until material refusal is recorded on the pressure gage of the pumping unit.

5. Care shall be taken during the pumping operation to avoid excessive pressures that may damage the manhole structure.

6. Upon completion of the injection remove the ports and fill the remaining holes with patching compound.

D. Installation – Bleed Pipes

1. Drill holes and install "bleed" pipes around the bottom of the manhole wall to act as relief ports for water to flow from other active leaks to allow performance of the work.

2. Remove bleed pipes and seal holes after all other manhole sealing work is complete.

E. Application – Plugging Compound

1. Apply plugging compound in accordance with manufacturer's instructions.

F. Application – Patching Compound

1. All material shall be mixed and applied in accordance with the manufacturers instructions.

2. Installation to be performed by mechanics skilled in the application of the particular type of system.

3. Prior to application, dampen area to be patched. Pack material into the area to be patched, troweling the minimum amount required to achieve a level finish. Allow adequate curing time.

G. Brickwork

1. Only clean bricks shall be used. Bricks shall be moistened by suitable means, as directed, until they are neither so dry as to absorb water from the mortar nor so wet as to be slippery when laid.

2. Each brick shall be laid in a full bed and joint of mortar without requiring subsequent grouting, flushing, or filling, and shall be thoroughly bonded as directed.

H. Invert Repair

1. After preparation has been completed, remove all loose material and wash wall again.

2. Any bench, invert or service line repairs shall be made at this time using the quick setting patching material (paragraph 2.1) and shall be used per manufacturer's recommendations.

3. Invert repair shall be performed on all inverts with visible damage or infiltration. After blocking flow through the manhole and thoroughly cleaning the invert, the quick setting patch material (paragraph 2.1) shall be applied to the invert in an expeditious manner. The mix shall be troweled uniformly onto the invert at a minimum thickness of 3/4-inches, extending out onto the bench sufficiently to tie into the monolithic liner to be spray applied. The finished invert shall be smooth and free of ridges. The flow may be re-established in the manhole within 45 minutes after placement of the material.

I. Application – Cementitious Liner

1. All material shall be mixed and applied in accordance with the manufacturers instructions.

2. Installation to be performed by mechanics skilled and licensed by the manufacturer in the application of the particular type of system.

3. Application of the cementitious liner shall be according to the manufacturers recommendations and as approved by the Engineer. Two coats of liner shall be applied with the minimum thickness of ½-inch per coat.

J. Application – Epoxy Top Coat

1. Application procedures shall conform to the recommendations of the Manufacturer, including material handling, mixing, safety, spray equipment and environmental controls during application.

2. The reconstructed substrate (cementitious liner) shall have cured at least 24 hours.

3. The reconstructed substrate shall be washed with a high pressure water (minimum 1,500 psi).

4. Surface shall be free to surface moisture prior to applying Epoxy top coat. Forced air shall be used to dry surface.

5. Epoxy top coat shall be applied per manufacturers recommendations to a properly prepared surface but shall not be less than 80 mils or more than 250 mils.

6. Thickness shall be checked using standard paint mil gauges.

7. Manhole bench shall be sprayed in such a manner as to blend with wall liner.

8. Flow shall be withheld for 3 hours after application before releasing.

8.10.4 Final Acceptance

A. After the specified types of rehabilitation work have been completed, visually inspect each manhole in the presence of the Engineer for compliance with the Specifications and for watertightness against leakage. Repair all visible leaks and defects observed during inspection.

B. The Engineer reserves the right to inspect the rehabilitated manholes during the warranty period. Any leakage or defects in the work found by this inspection shall be corrected by the Contractor within thirty (30) days of notice at no additional cost to the Owner.

8.10.5 Warranty

A. Except as otherwise specified, all work shall be guaranteed by the Contractor against defects resulting from the use of inferior materials, products, equipment, or workmanship for one (1) year from the date of final completion of the Contract.

8.10.6 Submittals

A. Submit under provisions of General Conditions.

B. Product Data: Provide data on grouting, plugging, patching and coating materials; manhole steps; mortar components; manhole frames and covers; and sewer brick.

C. Submit mortar design mix.

D. Submit manufacturer's installation/application instructions for grouting, plugging, patching and coating materials.

E. Submit an outline of the procedures proposed for the accomplishment of work. Include a detailed description of the methods and equipment to be used for each operation.

8.10.7 Qualifications

A. Installer: Company specializing in performing the work described in this section with a minimum of one (1) year documented experience. The installer shall be a licensed applicator by the manufacturer. He shall also be required to supply a minimum of three (3) references where this product has been utilized.

8.10.8 Quality Assurance

A. The materials used to plug, patch and coat the manhole shall comprise of a system specifically recommended by the manufacturer for sanitary sewer manhole rehabilitation.

B. Perform work in accordance with NASSCO Recommended Specifications for Sewer Collection System Rehabilitation.

8.10.9 Delivery, Storage, and Handling

A. Deliver, store, protect and handle products to site under provisions of General Conditions.

B. Maintain packaged materials clean, dry and protected against dampness, freezing and foreign matter.

8.10.10 References

A. AASHTO M91 - Red Sewer Brick Only Grade SS.

B. ASTM C32 - Specification for Sewer and Manhole Brick (Made from clay or shale). Grade SS

C. ASTM C109 - Test Method for Compressive Strength of Hydraulic Cement Mortars (Using 2-inch or 50-mm Cube Specimens).

D. ASTM C144 - Specification for Aggregate for Masonry Mortar.

E. ASTM C150 - Specification for Portland Cement.

F. ASTM C191 - Test Method for Time Setting of Hydraulic Cement by Vicat

Needle.

G. ASTM C207 - Specification for Hydrated Lime for Masonry Purposes.

H. ASTM C882 - Test Method for Bond Strength of Epoxy-Resin Systems Used with Concrete by Slant Shear.

I. NASSCO Recommended Specifications for Sewer Collection System Rehabilitation.

J. ASTM D-638, Tensile Properties of Plastics

K. ASTM D-790, Flexural Properties of Unreinforced and Reinforced Plastics

L. ASTM D-695, Compressive Strength

M. ASTM D-2240, Rubber Property - Durometer Hardness, Type D

N. L.A. County, Standard Specifications for Public Works Construction, Chemical Resistance Test Section 210-2.3.1

O. ASTM D-2288, Determination of Volatile Matter

P. ASTM D-2566, Linear Shrinkage of Cured Thermosetting Casting Resins during Cure

8.10.11 Measurement and Payment

The unit price to be paid for under this item shall be the length of manholes rehabilitated measured by the vertical foot, as measured from the bottom of the manhole frame to the manhole invert.

The unit price for this item shall constitute full compensation for preparing manhole; bypass pumping or handling of existing sewage flow; mobilization and demobilization; removal of debris, sand, and roots; cleaning manhole; chemically sealing leaks, and application of cementitious liner into the manhole walls, cones, bench, and pipe inverts, and all other work incidental thereto and not specifically included for payment under other items.

Payment Items		Unit
8.10.11a	Manhole Sealing and Coating	Vertical Foot

8.11 REFERENCES

A. American Society for Testing and Materials Publications (ASTM)

1. ASTM Standard Test Methods for Flexural Properties of Unreinforced Plastics and Electrical Insulating Materials, Designation D 790.

2. ASTM Standard Practice for Rehabilitation of Existing Pipelines and Conduits by the Inversion and Curing of a Resin-Impregnated Tube, Designation F 1216.

3. D. 3034-89 - Specification for Type PSM Polyvinyl chloride (PVC) Sewer Pipe and Fittings.

4. F679-89 - Specification for Polyvinyl chloride (PVC) Large - Diameter Plastic Gravity Sewer Pipe and Fittings.

5. F477-76 (1985) - Specification for Elastometric Seals (Gaskets) for Joining Plastic Pipe.

6. D 3212-89 - Specification for Joints for Drain and Sewer Plastic Pipes Using Flexible Elastometric Seals.

7. National Association of sewer service Companies

8. NASSCO Recommended Specifications for Sewer Collection System Rehabilitation.

SECTION 9 ROADWAY SPECIFICATIONS

9.1 ROADWAY WORK PREPARATION

9.1.1 General

Prior to the start of any roadway work, the Contractor shall complete the following requirements:

A project schedule outlining the timing of each part of the construction process shall be submitted to the Engineer for approval. The project schedule shall identify the various Subcontractors and the work items each Subcontractor will be conducting.

The Contractor shall select a liaison who shall be "on call" for the duration of the Contract and shall manage the overall project and coordinate the Subcontractors' activities.

Staging and storage areas shall be determined and approved by the Engineer.

Dig Safe shall be contacted and a confirmation number obtained at least 72 hours prior to construction.

A pre-construction conference with the Department of Public Works, Police Department, Fire Department and any other involved departments shall be held at the DPW Conference Room to coordinate inspections, to meet the Contractor and his liaison.

All construction signage, safety barriers and other traffic control devices shall be in place.

The Contractor's attention is directed to Articles XIV and XXXIV of Section 3 Contract Agreement regarding the use of Subcontractors. All Subcontractors shall be identified on the Project Schedule required above.

9.1.2 Surface Preparation

It is the intention of this subsection to require that the surface of the area on which the work is to be constructed be appropriately prepared in accordance with the specifications for the particular type of work involved. Prior to the application of the pavement top course, crack or chip sealing, or pavement markings, the surface

of the work area shall be swept clean of stones, sand, leaves and debris. Failure by the Contractor to prepare the work surface in accordance with the specifications shall be considered sufficient cause to reject all or any part of the work. The cost of preparing the work surface area shall be considered incidental to the particular type of work involved.

9.1.3 Dust Control

The Contractor shall provide dust control when and as directed by the Engineer. Dust control shall be accomplished by applying calcium chloride at the rate of 1 1/2 pounds per square yard, by applying water through spraying equipment to produce a uniform distribution over the surface or by other methods approved by the Engineer. Note, calcium chloride is toxic to plants and grasses.

The Contractor shall provide all labor, materials and equipment (except where water is supplied by the Owner) necessary to provide dust control at his own expense, the cost of such work being incidental to the particular work involved.

9.1.4 Joint Preparation

Where new pavement is being laid to meet existing pavement, the existing pavement shall be cut to a neat line using a power saw or pavement breaker approved by the Engineer. Excavation equipment shall not be used to perform pavement cutting operations. The shape of the joint shall be at a 45 degree angle to the plane of the surface pavement for a smoother transition and shall extend to the full depth of the compacted thickness of the proposed pavement. All existing pavement on the side of the joint where new pavement is proposed shall be removed to the full depth of the compacted thickness of the proposed pavement along the entire length of the joint to a width of at least 36 inches or to limits indicated on the contract plans. A small pavement milling machine or other equipment approved by the Engineer may be used to create the joint. The joint shall be thoroughly cleaned of all loose material and painted with emulsion before the new pavement is laid. Once the new pavement is laid it shall be compacted as specified in subsection 9.5 or 9.6 and the plane of its surface shall meet the existing pavement surface plane exactly. The joint shall then be painted with asphalt emulsion and sanded to seal the joint along its entire length (Burning the Joint). The Contractor shall provide all labor, tools, materials and equipment to provide joints where required on the plans or by the Engineer at the Contractor's expense; compensation for said joint work being understood as incidental to the pavement work involved.

9.1.5 Leveling Courses

The Contractor may make adjustments to the as-built surface of the pavement binder course or the cold planed (milled) surface of existing pavement by adding a bituminous concrete pavement to the surface as a shim in order to bring the profile or cross-section into compliance with the lines and grades required by the contract plans. The minimum thickness of the shim shall be two and one-half (2 1/2) times the maximum aggregate size in the bituminous mix. Leveling courses shall only be installed by the Contractor in the presence of and as directed by the Engineer. The Contractor shall assume all costs of providing leveling course(s) as specified herein unless the Engineer determines that the leveling course(s) are required for reasons beyond the Contractor's control. Should the Engineer determine that adjustments to the pavement surface are necessary for reasons outside of the Contractor's responsibility, payment for the leveling course provided shall be paid for at the Contractor's unit bid price for pavement binder course. The Engineer will note his approval on the bill of lading for all leveling courses which he determines will be paid.

9.1.6 Casting Adjustments

The Contractor shall take tie measurements to all castings which may be temporarily or permanently raised or lowered. A minimum of three tie measurements for each casting shall be taken from permanently fixed objects such as utility poles, hydrants, trees, house corners or other permanently fixed objects which are not proposed to be relocated. The Contractor shall be responsible for keeping neatly bound and legible records of the tie measurements and shall provide a copy of said records to the Engineer before any casting adjustments are made. Examples of some large castings which may be proposed to be adjusted include drainage manhole frames and covers, sewer manhole frames and covers, catch basin frames and grates, and telephone, electric or cable manhole frames and covers. Valve castings, water shut-off valves, gas gate valve castings and gas shut-off valves are examples of some small castings. The Contractor shall provide all labor, materials and equipment necessary to make the casting adjustments as shown on the contract plans and as specified in subsection 5.8.2. Dense graded crushed stone shall be placed for a depth of 12” and two feet in radius around all small castings prior to laying the bituminous concrete binder and after the casting has been adjusted to the proposed binder elevation.

9.1.7 Traffic Sensor Devices

The Contractor shall not remove, damage or interfere with traffic loop detectors, magnetic probes or any other traffic sensing devices unless specifically authorized to do so by the Engineer. The Contractor shall inform himself as to the exact location of these devices at the work site and shall protect same from all harm or injury until the Engineer orders their removal. Failure by the Contractor to comply with this specification shall result in the cost of repair of the traffic sensing device being withheld from moneys owed the Contractor under this contract.

The contractor shall notify the Engineer in writing as to when the existing loop detectors will be taken out of service so that the system can be sufficiently tested for optimal pretimed operation. Loop detector cables in the roadway are to be disconnected from the loop detector lead in cable at the pull box. Lead in cable ends are to be wrapped water tight to prevent damage from water during construction. Existing loop detectors are to be completely removed and disposed of. New loop detectors are to be placed in saw cut lines in the new binder course pavement. The contractor shall install the wire loop cable into the sawcut in accordance with the Massachusetts Highway Department Standard Specifications, drawings and installation methods. Once installed, the contractor is to seal the sawcut and reconnect the new loops to the lead in cables. All standard testing requirements will be enforced to ensure proper operation of the system.

9.1.8 Utility Poles

The Contractor shall coordinate his construction activities with Boston Edison Company and/or New England Telephone Company when utility poles or street lights have to be supported or relocated during the course of the work. No additional compensation shall be allowed for the Contractor's failure to coordinate his work. The Contractor shall take precautions to prevent his equipment from interfering with overhead utilities during transport or use of his equipment. Should any utility become damaged, the Contractor shall be responsible for contacting the utility company involved and shall take full responsibility for any damage incurred. The cost of physically relocating utility poles or street lights shall be borne by the Owner. The Contractor shall not support or relocate any utility pole without the expressed written consent of the Boston Edison Company and/or the New England Telephone Company. The Contractor will not be held responsible for any unreasonable delays as determined by the Engineer caused by the respective utility companies.

9.1.9 Hydrants and Water Valves

The Contractor shall not operate any hydrants or water valves in the Town without the written permission of the Engineer and shall protect them from damage due to his operations. Any damage occurring to hydrants or water valves at the work site shall be immediately reported to the Needham Department of Public Works, Water and Sewer Division. The Contractor shall not expose hydrants below their bury line nor shall he allow valves to protrude above the surface without placing a Type I lighted barricade (see the Manual on Uniform Traffic Control Devices) at each location. The Contractor shall reimburse the Owner for all damages occurring to any hydrant or water valve not properly barricaded in accordance with these specifications.

The Contractor shall provide all labor, materials and equipment necessary to adjust or relocate any hydrant as indicated on the contract plans or as directed by the Engineer. Hydrants shall only be adjusted or relocated in the Engineer's presence.

9.1.10 Street Signage

The Contractor shall maintain all existing street signage (street name signs, stop signs, advisory signs, no parking signs, etc.) in working order during the construction process. Any existing sign which is proposed to be relocated shall be installed in its proposed location after all grading work has been accomplished. Existing signs which must be moved in order to accomplish grading work shall be temporarily relocated until the grading work is completed. All existing signage which the Contractor is required to relocate shall be installed in accordance with the Manual on Uniform Traffic Control Devices for Streets and Highways Specifications. The cost of maintaining or temporarily relocating existing street signage shall be considered incidental to the work involved.

9.1.11 Driveways and Sidewalks

The Contractor shall at all times maintain a safe and convenient access way from the street to the driveway and shall notify the owner at least 24 hours prior to the date that actual construction or reconstruction of the driveway occurs (refer to Section 4.8). The Contractor shall not enter onto privately owned property without obtaining prior written permission from the owner of the property.

A maximum sidewalk cross-slope of 2% (1/4 inch per foot) shall be maintained across all driveway openings for the full width of the sidewalk in accordance with subsection 9.11 and as shown on the contract plans.

The cost of driveway and sidewalk work preparation shall be considered

incidental to the work involved.

9.1.12 Curbing

The Contractor shall protect all existing curbing which is not proposed to be relocated or removed. Any curbing which becomes mis-aligned or disturbed as determined by the Engineer, shall be reset by the Contractor at his expense. The cost of protecting existing curbing shall be considered incidental to the work involved.

9.1.13 Planting Strips and Shoulder Work

Existing planting strips and shoulders which become damaged by the Contractor's activities shall be repaired at the Contractor's expense in accordance with subsection 5.9 of these specifications. Where roadway work involves the widening of the traveled way, all unsuitable materials in the planting strip (grass plot) or shoulder areas, as determined by the Engineer, shall be removed.

9.1.14 Guard Rails, Fences and Walls

The Contractor shall support and protect any existing guard rails, fences or walls from being damaged by his construction work. The Contractor shall be responsible for repairing or replacing to the Engineer's satisfaction any guard rails, fences or walls or any part thereof which become damaged because of his activities.

9.1.15 Survey Markers

The Contractor shall not disturb or remove any granite or reinforced concrete bounds, iron pipes, iron rods, stakes or other property line markers without the written permission of the Engineer. Any survey marker which becomes disturbed or damaged by the Contractor's activities shall be reset to the Engineer's satisfaction at the Contractor's expense.

9.1.16 Layout and Grading Stakes

Except as otherwise specified, the Owner shall provide one set of layout and grading stakes set according to the Contract plans for the contractor's use. The Contractor shall be responsible thereafter for their maintenance and shall replace, at his own expense, any stakes which become disturbed or are missing.

9.1.17 Pavement Markings

The Contractor shall provide a sufficient number of traffic cones to adequately protect new pavement markings while they dry. The cones shall conform to the Manual on Uniform Traffic Control Devices specifications and shall be spaced no further than 25 feet apart. Closer spacing may be required by the Engineer if he determines that the markings are not adequately protected (refer to sub-section 9.1.2 Surface Preparation for additional requirements). The cost of protecting pavement markings shall be considered incidental to the work involved.

9.1.18 New Stone Masonry Retaining Walls

The work shall consist of the construction of field stone masonry, in accordance with the provisions of Section 685 of the MHD Specifications, and the details shown on the plans. All stones shall be laid in cement mortar.

9.1.19 Measurement and Payment

Sawcutting bituminous concrete or cement concrete shall be paid at the contract unit price for linear feet of sawcutting measured in the field, and will include all labor. materials, tools, equipment and work necessary to complete the item.

Bitumen for tack coat placed at all sawcut joints and on all milled surfaces prior to paving will be measured based on an application rate of 0.10 gallons per square yard. Payment will be made based on the unit price per gallon.

Casting adjustments shall be paid for on a per unit basis and shall include all labor, materials and equipment to make the adjustment in accordance with these specifications and as indicated on the contract plans.

Wire loop detectors installed in the roadway will be measured by the total length of sawcuts performed for installation of the loops. All materials, labor, tools, equipment and work necessary to complete the installation is included and will be paid for at the unit price per linear foot. Sawcutting, splicing, removal of existing wire loops, wiring and sealing are considered incidental to the item and should be included in the unit price per linear foot.

Hydrants, which are required to be relocated, shall be paid for on a per unit basis and shall include all labor, materials and equipment to relocate each hydrant in accordance with these specifications and as indicated on the contract plans.

Reconstruction and/or removal and relocation of existing stone walls will be measured by the cubic yards of wall to be rebuilt. Existing stone materials are to be salvaged and reused for the wall reconstruction. Payment will be made for the

total cubic yards of wall removed and rebuilt complete in place and includes all labor, materials, tools, equipment and work necessary to complete the item.

New stone masonry walls will be measured by the cubic yards of wall to be built. Payment will be made for the total cubic yards of wall built, including footings and caps, and includes all labor, materials, tools, equipment and work necessary, including excavation and backfill, to complete the item.

Fences removed and reset will be paid for at the unit price per linear foot and includes all miscellaneous appurtenances necessary to reset the fence to its original longitudinal location. Unit price per linear foot includes all labor, materials, tools, equipment and work to reset existing fences. No additional compensation will be given for damaged fence materials for which the contractor must supply additional replacement material at his own cost.

Stone bounds removed and staked (delivered) shall be paid for under the contract unit price each. Unit price each includes all labor, materials, tools, equipment and work required to remove and deliver the disk to the engineer.

Payment Items

		Unit
9.1.19a	Sawcutting Cem. & Bit. Concrete	Linear Foot
9.1.19b	Bitumen for Tack Coat	Gallon
9.1.19c	Casting Adjustment - Large	Each
9.1.19d	Casting Adjustment - Small	Each
9.1.19e	Wire Loop Detector	Linear Foot
9.1.19f	Relocate/Adjust Hydrant	Each
9.1.19g	Stone Masonry Wall Removed & Reset	Cubic Yard
9.1.19h	New Stone Masonry Retaining Wall	Cubic Yard
9.1.19i	Fence Removed & Reset	Linear Foot
9.1.19j	Stone Bound Removed & Stacked	Each

9.2 GRAVEL SUB-BASE COURSE

9.2.1 General

The Contractor shall provide all labor, materials, equipment and incidentals required for the installation of the gravel sub-base course on the prepared sub-grade in accordance with these specifications and in close conformity with the lines, grades and cross-sections shown on the contract plans or established by the Engineer.

9.2.2 Construction Requirements

The gravel sub-base course shall consist of Gravel Borrow, Type C as specified in Section 5.6.1 and shall be placed on the graded and compacted Sub-grade (see Section 5.7).

The gravel sub-base shall be spread and compacted in one layer, 8 inches in depth compacted measurement, to not less than 95 percent of the maximum dry density of the material as determined by the Standard AASHTO Test Designation T99 compaction test Method C within 5% of optimum moisture content as determined by the Engineer. If the material retained on the #4 sieve is 50% or more of the total sample, this test shall not apply and the material shall be compacted to the satisfaction of the Engineer. The specific density of the Gravel Sub-base shall be maintained by determining the number of passes of a roller required to produce a constant and uniform density, after conducting a series of tests either using the sand/volume or the nuclear density testing device.

Any stone with a dimension greater than 2 inches shall be removed from the sub-base before the gravel is compacted. Compaction shall continue until the surface is even and true to the proposed lines and grades within a tolerance of 1/2 inch above or below the required cross sectional elevations and to a maximum irregularity not exceeding 1/2 inch under a 10 foot line longitudinally. Any specific area a gravel sub-base which, after being rolled, does not form a satisfactory, solid, stable foundation shall be removed, replaced and re-compacted by the Contractor without additional compensation.

9.2.3 Measurement and Payment

The Gravel Sub-Base Course shall be measured by the amount of cubic yards of compacted material in place. Payment for shaping and compacting of the Sub-Base as specified herein shall be included in the item of-Gravel Sub-Base Course.

Payment Item

	Unit
9.2.3a Gravel Sub-Base Course	Cubic Yard

9.3 GRAVEL BASE COURSE

9.3.1 General

The Contractor shall provide all labor, materials, equipment and incidentals required for the installation of the gravel base course on the prepared sub-grade in accordance with these specifications and in close conformity with the lines, grades and cross-sections shown on the contract plans or established by the Engineer.

9.3.2 Construction Requirements

The gravel base course shall consist of coarse aggregates of crushed stone or gravel and fine aggregates of natural sand or stone screenings uniformly pre-mixed with a predetermined quantity of water and placed on the sub-base in close conformity with the lines and grades shown on the contract plans or established by the Engineer.

The quality and gradation requirements for the gravel base course are as follows:

Coarse aggregate shall consist of hard, durable particles of fragments of stone.. Materials that break up when alternately frozen and thawed or wetted and dried shall not be used.

Coarse aggregate shall have a percentage of wear, by the Los Angeles Abrasion Test (AASHTO-T-96) of not more than 45.

Fine aggregate shall consist of natural or processed sand.

The composite material shall be free from clay, loam or other cohesive soil, and shall conform to the following grading requirements:

Sieve Designation	Percentage by Weight Passing Square Mesh Sieves
2 in.	100
1 1/2 in.	70-100
3/4 in.	50-85
No. 4	30-55
No. 50	8-24
No. 200	3-10

Sampling and testing shall be in accordance with the following standard AASHTO methods:

Sieve Analysis	T27
Passing No. 200 Sieve	Tll

The gravel base course shall be spread and compacted in one layer, 4 inches in compacted depth, to the same tolerances specified above for the gravel sub-base.

The gravel base course material shall meet the same requirements as specified in MDPW Specification M2.01.7 except as noted above.

9.3.3 Measurement and Payment

The Gravel Base Course shall be measured by the amount of cubic yards of compacted material in place. Payment for shaping and compacting of the Base as specified herein shall be included in the item of Gravel Base Course.

Payment Item

	Unit
9.3.3a Gravel Base Course	Cubic Yard

9.4 RECLAIMED BASE COURSE

9.4.1 General

The Contractor shall provide all labor, materials, equipment and incidentals required to scarify and pulverize the in place asphalt pavement and underlying material, mix and/or blend the material and spread and compact the resultant mixture to the lines and grades shown on the plans or established by the Engineer.

9.4.2 Construction Requirements

All scarified and pulverized material shall pass the 3-inch sieve. Material for blending shall conform to 5.6.1 Gravel Borrow - Type b.

Prior to scarifying and pulverizing the existing pavement, the Contractor shall locate (See Subsection 9.1.6 Casting Adjustments) and protect existing drainage and utility structures and underground pipes, culverts, conduits and other appurtenances. If the upper sections of utilities are removed to facilitate scarifying and pulverizing the existing pavement, the remaining part of the structure shall be immediately covered with a steel plate capable of withstanding a 36.5 ton truckload with impact. The work of lowering and raising each casting shall be considered to be one adjustment.

The Contractor shall submit to the Engineer for his approval a description of the equipment and the process to be used for scarifying and pulverizing the existing pavement. The pulverizing operation shall be controlled in such a manner that the resultant material will be free from excessive fine material (not more than 10-15% passing the No. 200 sieve). The Engineer will determine the acceptable level of fine material.

The bituminous pavement and underlying material shall be scarified to a minimum depth of 10 inches, or as established by the Engineer, and pulverized and mixed to produce a consistent homogeneous material, free of all-organic material. If the Engineer directs, Gravel Borrow (Type b) shall be blended with the pulverized material in quantities to be established by the Engineer to produce a uniform blend suitable for use as base course.

Unsuitable material in the sub-grade or in the planting strips or shoulders (See Subsection 9.1.14) shall be removed to the lines and depths established by the Engineer and replaced with Gravel Borrow conforming to the requirements of Subsection 5.6.1 Gravel, Type a.

The mixed and/or blended base course material shall be spread and compacted in accordance with the requirements of Subsection 9.3, to the widths, depths and crowns shown on the plans or established by the Engineer.

9.4.3 Measurement and Payment

The reclaimed base course shall be measured in place to the limits specified on the plans or as directed by the Engineer. No deductions shall be made for manhole covers, grates or other surface structures.

The unit price for Reclaimed Base Course, complete-in-place, including scarifying, pulverizing and mixing the existing pavement, blending with Gravel Borrow, and spreading, grading and compacting the blended material, shall be per square yard. It shall also include cost of labor, tools, equipment, materials (except as noted herein) and all other work necessary to satisfactorily complete the work in accordance with these specifications to the lines, grades and cross-sections indicated on the contract plans or as directed by the Engineer.

Removal of unsuitable material in the sub-grade shall be paid for at the unit price under Section 5.4.5, Unclassified Excavation.

Gravel borrow for blending with the pulverized in-place material and gravel borrow for replacing excavated unsuitable material shall be paid for at the unit price under Section 5.6.1, Gravel Borrow.

Casting adjustments (lowering, raising and resetting is considered as one (1) adjustment) shall be paid for at the unit price under Section 9.1.7, Casting Adjustments.

Payment Items

	Unit
9.4.3a Reclaimed Base Course	Square Yard

9.5 PAVEMENT BINDER COURSE

9.5.1 General

The pavement binder course shall be composed of mineral aggregate, mineral filler and bituminous material. The binder course shall be constructed in one 3 inch layer, compacted thickness, as shown on the contract plans or as directed by the Engineer. The binder shall be spread and compacted on the prepared or existing gravel base in accordance with these specifications and in close conformity with the lines, grades, compacted thickness and typical cross-section shown on the contract plans or as directed by the Engineer.

9.5.2 Construction Requirements

The pavement binder course shall be constructed in accordance with Section 420 of the MDPW Specifications. The pavement binder shall be Class I Bituminous Concrete Base Course, Type I-1 "Binder Course" as specified above.

The Engineer may require the Contractor to remove and replace at the Contractor's own expense, any defective mix not conforming to these specifications or contract plans. the Engineer may, at his discretion, require that laboratory tests be performed to assure compliance with material composition or compaction specifications. The Engineer's decision to remove defective mix will be based on the results of said testing which shall be conducted in accordance with the relevant portion of Section 400 of the Commonwealth of Massachusetts Department of Public Works Standard Specifications for Highways and Bridges, 1988 (MDPW Specifications) except as herein specified. The costs for such tests shall be borne by the contractor.

9.5.3 Measurement and Payment

The pavement binder course shall be measured by the ton and shall be the actual and verified tonnage, complete in place and approved. The quantity shall be determined only by weight slips that have been properly counter-signed by the Engineer at the time of delivery. Payment shall also include edge tack coating as specified in plan details.

Payment Items

	Unit
9.5.3a Class I Bituminous Concrete Binder Course, Type 1-1	Ton

9.6.1 General

The pavement top course shall be composed of mineral aggregate, mineral filler and bituminous material. The top course shall be constructed in one 1 1/2 inch layer, compacted thickness, as shown on the contract plans or as directed by the Engineer. The top course shall be spread and compacted on the prepared or existing binder course in accordance with these specifications and in close conformity with the lines, grades, compacted thickness and typical cross-section shown on the contract plans or as directed by the Engineer.

9.6.2 Construction Requirements

The pavement top course shall be constructed in accordance with Section 460 of the MDPW Specifications. The pavement top course shall be Class I Bituminous Concrete Top Course, Type I-1 "Top Course" as specified above.

The Engineer may require the Contractor to remove and replace at the Contractor's own expense, any defective mix not conforming to these specifications or contract plans. The Engineer may, at hit discretion, require that laboratory tests be performed to assure compliance with material composition or compaction specifications. The Engineer's decision to remove defective mix will be based on the results of said testing which shall be conducted in accordance with the relevant portion of Section 400 of the Commonwealth of Massachusetts Department of Public Works Standard Specifications for Highways and Bridges, 1988 (MDPW Specifications) except as herein specified. The costs for such tests shall be borne by the contractor.

9.6.3 Measurement and Payment

The pavement top course shall be measured by the ton and shall be the actual and verified tonnage, complete in place and approved. The quantity shall be determined only by weight slips that have been properly counter-signed by the Engineer at the time of delivery. Payment shall also include edge tack coating as specified in plan details.

Payment Items

	Unit

9.6.3a Class I Bituminous Concrete Top Course, Type 1-1 Ton

9.7 CRACK SEALING

9.7.1 General

The work covered by this section shall consist of providing all plant, labor, equipment and materials necessary to perform all operations in connection with the cleaning and sealing of construction and random cracks in bituminous concrete pavements, vegetation and moisture removal, and sterilization of cracks where necessary. All workmanship shall be of the highest quality, and any work deemed inferior by the Engineer shall be removed and replaced at the Contractor's expense. All equipment used in the performance of this work shall be in proper working order to ensure continuous operation in an expeditious manner, and any equipment not operating to proper standards may be removed from the project at the direction of the Engineer.

9.7.2 Construction Requirements

The Contractor shall have the following equipment, in good working order, on the job site at all times: a portable air compressor capable of furnishing not less than 100 cubic feet of air per minute at not less than 90 lbs. per square inch pressure at the nozzle, and shall be equipped with traps to remove oil and water; a hand-held or vehicle mounted propane torch with proper nozzle to provide for rapid moisture removal, sterilization, and heating of existing material; **a** manually operated gas powered air broom or self-propelled sweeper designed specifically for use in highway pavement cleaning to remove debris, dust and dirt from cracks; a melting kettle to melt the joint sealing compound. The kettle shall be filled with a suitable heat transfer oil or substitute having a flash point of not less than 600 F. The kettle shall be equipped with a suitable mechanical agitating device, and the sealant within the kettle shall be kept agitated at all times. The kettle shall also be equipped with thermostatic control calibrated between 200 degrees F. and 550 F.; hand tools consisting of brooms, shovels, metal bars with chisel shaped ends, and any other tools appropriate for this work.

No crack sealing material shall be applied in wet cracks or where frost, snow, or ice is present, nor when ambient temperature is below 40 F.

All road surfaces containing cracks that are to be sealed shall be thoroughly swept to remove loose materials and surface grit. The cracks to be sealed shall then be blown clean with a high speed jet of compressed air, and any vegetation shall be completely removed. All cracks shall then be heated with a propane torch to

sterilize the material, remove any moisture, and heat the existing pavement to ensure a good bond with the sealing material.

Crack sealer shall then be applied in all cracks sufficiently to fill each crack and provide for a I inch overlap of sealer on existing pavement. The sealer shall be an asphalt and fiber compound and shall conform to the following requirements:

Asphalt Sealant

Shall be asphalt cement (AC-10 or AC-20) and shall comply with the Commonwealth of Massachusetts Department of Public Works Standard Specifications for Highways and Bridges, 1968 Edition Section M3.01.0.

Fiber Materials

Shall be specifically designed for improving strength and performance of the asphalt sealant, and shall have the following properties:

Material:	polyester
Color:	White
Diameter:	0.005 mm
Length:	0.25 inch
Tensile Strength:	75,000 psi
Specific Gravity:	1.36 (Typical)
Elongation at Break:	45%
Water Absorbability:	less than 1%
Ignition Point:	1000 deg. F.
Melting Point:	480 deg. F.

Asphalt and fiber compound shall be mixed at a rate of 7 percent by weight of fiber to weight of asphalt cement.

Immediately after the application of the crack sealer, a sand-like material such as Black Beauty or other material approved by the Engineer shall be either manually or mechanically applied to each area to reduce tracking of the sealant, and then each area shall be rolled with a 5-ton roller.

9.7.3 Measurement and Payment

Measurement for this item shall be by the gallon or linear foot. Payment shall be at the unit price, and shall be complete payment for the entire item, including all labor, materials, and equipment required.

Payment Items

		Unit
9.7.3a	Crack Sealing	Gallon
9.7.3b	Crack Sealing	Linear Foot

9.8 CHIP SEAL/STONE SEAL (STRESS ABSORBING MEMBRANE)

9.8.1 General

The Contractor shall provide all plant, labor, equipment and materials required to provide a Stone Seal surface treatment and Stress Absorbing Membrane (SAM). All workmanship shall be of the highest quality, and any work deemed inferior by the Engineer shall be corrected or adjusted at the Contractor's expense. All equipment used in the performance of this work shall be in proper working order to ensure continuous operation in an expeditious manner, and any equipment not operating to proper standards may be removed from the project at the direction of the Engineer.

9.8.2 Construction Requirements

The Contractor shall have the following equipment, in good working order, on the job site at all times during the prosecution of the work:

Distributor Truck

The Distributor Truck shall contain suitable internal mechanical circulating and heating appliances which will provide a uniform temperature of the entire mass of the material as directed by the Engineer. The distributor shall be equipped with a tachometer, pressure gauges, volume measuring devices, and a thermometer to monitor tank contents' temperature. The distributor shall have adequate pump capacity to maintain a high rate of circulation in the tank and to ensure proper distribution of the material. The distributor shall have proper manifolds and distributor bars that are fully circulating to provide uniform spraying of the materials and must provide constant positive cut off to prevent dripping from the nozzles. The design and size of the spray nozzles and construction of the spray system shall provide a sufficient and uniform fan-shaped spray throughout the entire length of the movable spray bar at all-times while operating, and shall provide a spray that will be uniform and completely cover the portion of the surface receiving the application. Controls for width and rate of spray for the distributor bar shall be located in the cab of the truck, and shall be capable of applying material in accurately measured quantities at any rate from one-tenth

(1/10) to two (2) gallons per square yard, within a tolerance of plus or minus 0.05 gallons per square yard. The application rate shall remain constant for any length of spray bar ordered, up to a maximum of twenty (20) feet, and shall maintain a uniform rate of application for the entire load regardless of change in gradient or direction of the road. A "bootman" shall accompany the distributor truck and ride or walk in a position so that all spray bar nozzles are in his full view, and readily accessible for unplugging. Any distributor that produces a streaked or irregular distribution of the material shall be promptly repaired or removed from the project.

Aggregate Spreading Equipment

This equipment shall be self-propelled and shall be adjustable to accurately control the spread of cover aggregate per square yard. The-equipment shall be mounted on pneumatic tires and shall have a width of spread of not less than ten (10) feet nor more than twelve (12) feet. Cut-off plates shall be provided to permit the width of spread to be reduced in increments of six (6) inches from the maximum width to a minimum width of six (6) inches. The spreader shall be capable of spreading aggregate of a maximum size of one and one half (1 112) inches at any rate directed by the Engineer from three (3) to fifty (50) pounds per square yard of surface covered, and shall spread the aggregate in such a manner so that the wheels of the spreader shall not make contact with the treated surface until the aggregate has been spread. The spreader shall have an integrated hopper with a minimum capacity of five (5) tons and shall be positioned so that it may receive aggregate from the hauling vehicles without the wheels of the hauling vehicle making contact with the treated surface before the aggregate has been spread. Two (2) conveyor belts shall supply aggregate from the hopper to the element which spreads the aggregate on the road surface ' and power shall be provided to propel the spreader at a uniform rate of movement in gradients up to six (6) percent.

Self-Propelled Rubber-Coated Vibratory Drum Roller

Should this type of roller be required as directed by the Engineer, it shall be suitable for rolling bituminous pavements, and shall have a total compacting width of not less than sixty-six (66) inches. The gross weight shall be adjustable within the ranges of one hundred sixty-six (166) to three hundred thirty-three (333) pounds per linear inch of compacting width. The number of rollers required, and the operating weights of each shall be as directed by the Engineer, and all rollers shall be equipped with the necessary wet-systems to maintain a dampness on all drums and wheels.

Pneumatic-Tired Roller

Should this type of roller be required as directed by the Engineer, it shall be a self-propelled pneumatic roller with provisions for loading eight (8) to twelve (12) tons as deemed necessary. Pneumatic-tired rollers shall have a minimum compacting width of at least sixty (60) inches, and shall carry a minimum loading of 2000 pounds on each wheel, and a minimum tire pressure of sixty (60) pounds per square inch in each tire. All rollers shall be equipped with the necessary wet systems to maintain a dampness on al. tires.

Power rollers

Should this type of roller be required as directed by the Engineer, it shall be self-propelled, with either steel drums or combination pneumatic and steel drum weighing between five (5) tons and fifteen (15) tons. All rollers shall be equipped with the necessary wet systems to maintain a dampness on all drums.

The Engineer shall determine the type, number and combination of rollers to be used.

Hauling Equipment

Trucks used for hauling cover material shall be tailgate discharge, and compatible with the aggregate spreader so that the dump bed will not depress the spreader when fully raised, or have too short a bed which may result in aggregate spillage while dumping into the receiving hopper. Trucks shall be supplied in sufficient number to supply-the aggregate spreader at all times to ensure covering of the treated surface in a continuous and expeditious manner.

Front End Loader

The Contractor shall supply a Front End Loader to load aggregate materials onto trucks at the stockpile. The Front End Loader shall be rubber-tired and shall have a minimum bucket capacity of three (3) cubic yards.

Brooms and/or Sweeper

The Contractor shall supply any mechanical brooms and/or sweepers required by the Engineer which shall be revolving brush type, and so constructed as to sweep clean, or re-distribute aggregate without damage to the surface treatment. A

municipal street vacuum may be required by the Engineer in areas with curbing and gutters.

Laborers

The Contractor shall supply a minimum of two (2) Laborers to sweep or clean up spilled materials, lay building paper over each start-up application of treatment, and cover and re-open catch basins, manholes and water gates as encountered.

Before the application of liquid emulsion to the road surface, the entire paved surface to be treated shall be cleaned by sweeping, blowing, and/or other methods until free of dirt and loose particles. All cracks in the surface to be treated shall be treated and filled in accordance with Section 9.7.2. Construction shall not proceed when it is raining, when conditions are unfavorable to obtain a uniform spray, or until the ambient air temperature is forty (40) degrees Fahrenheit and rising.

Blending of liquid emulsions shall take place at sites which are accessible by the Engineer so that quantities and qualities of materials may be inspected prior to and during blending. The Contractor shall notify the Engineer two (2) days in advance of the blending schedule.

When Emulsified asphalt and Latex are to be used, Anionic R.S.-2 or Cationic C.R.S.-2, conforming to ASTM D977-80 or D-2397-79 respectively, and Latex rubber additive shall be mixed at the refinery or terminal to allow more time for asphalt and Latex to blend in transit, or on site, Latex shall be slowly added to the asphalt with the re-circulating pump running at the rate of 2.5 gal. per 100 gal. of emulsion, or as specified by the Engineer, and the mix shall re-circulate for a minimum of twenty (20) minutes before application. The Latex emulsion shall not be applied unless the ambient temperature is above 45 F. and rising, nor during rain or wet periods.

The liquid emulsion application shall be uniformly sprayed over the prepared surface in quantities determined by the Engineer. The application shall be performed in a continuous and expeditious manner, and shall be halted before the tank is empty to maintain a uniform application rate. Provisions shall be made at all starlings, re-startings, intersections, junctions at transverse joints with previous sprays or other pavements to insure that all distributor nozzles are operating at full pressure when the application begins. Building paper or an approved substitute shall be used across and over the end of previous applications to receive the initial application of any materials reaching the surface from the nozzles. The building paper shall be removed immediately after spraying has progressed beyond the transverse joint without spilling the excess liquid on the surface, and shall be

immediately disposed of. All longitudinal joints shall be reasonably true to line, and parallel to the road's centerline. Overlaps at longitudinal joints shall be a minimum width of four (4) inches, and a maximum width of six (6) inches or as directed by the Engineer. Edges at all asphalt joints shall be swept back and blended to prevent gaps, ridges and depressions and to provide uniform elevations. No application shall be made to any area which cannot be immediately covered with aggregate and adequate provisions shall be made to prevent marring and discoloration of adjacent pavement, structures, vehicles, foliage or personal property during all applications of liquid emulsions. Vehicles shall be prohibited from driving over the uncovered treated surface.

Cover aggregate shall conform to requirements of the State for crushed stone, gravel or slag, except that crushed gravel stone will not be permitted if membrane is to perform as a surface treatment. All stone aggregate shall be treated in a mix plant or pigmill at a rule of 2 to 3 gallons per tone using cutback asphalt MC-30, MC-70 or asphalt emulsion CSS-LH or SS-IH, or as amended or substituted by the emulsion manufacturer after testing the stone for compatibility with emulsion. All substitutions, amendments or deletions must be made in writing to the Contractor and approved by the Engineer.

Gradations shall conform to bid specifications, unless approved by the Contractor and Engineer. Percentage of wear as determined by the Los Angeles Abrasion Test (AASHTO-T96) shall be a maximum of 40, and shall have the following gradations:

1/4" Nominal		3/8” Nominal		½” Nominal	
Sieve Size	0/0 Passing	Sieve Size	0/0 Passing	Sieve Size	0/0 Passing
5/8	100	5/8	100	5/8	100
1/2	100	½	100	5/8	100
3/8	100	3/8	70-100	3/8	0-25
1/4	70-100	¼	0-15	¼	0-10
#8	0-5	#8	0-5	#8	0-2
#50	0-2	#50	0-2	#50	0-2
#200	0-2	#200	0-2	#200	0-2

Slight deviations from the above gradations on the 1/2" and 3/8" Sieves are acceptable except that there shall be no deviations from the 1/4" #8, #50 and #200 requirements unless approved by the asphalt-rubber supplier. Prior to application, representative samples of all materials shall be submitted to the Research and Materials Laboratory for test analysis if so directed by the Engineer. Once approved, sufficient aggregate material shall be treated and stockpiled on location

for the entire project, and the stockpile shall be protected from contamination by weather at all times.

The application of dry pre-treated aggregate shall follow the application of liquid emulsions as quickly as possible, spread uniformly by the self-propelled spreader at a rate of generally between 30 and 40 pounds per square yard, or as directed by the Engineer. Neither construction vehicles nor other vehicles shall be allowed to drive on uncovered emulsions, or covered emulsions before rolling. The two laborers provided by the Contractor will remain with the aggregate spreader to break down any aggregate spillage, over-chipping or to cover areas of aggregate deficiency from the initial spread. Exact quantities of both emulsion and aggregate may be varied as directed by the Engineer to meet specific existing field conditions without adjustment to contract unit prices.

Rolling shall commence immediately following the spreading of aggregate material. Types of rollers shall be determined by the emulsions and aggregates used, and as directed by the Engineer, but in all cases a minimum of three passes shall be made over each covered surface initially to be followed by secondary passes in types and numbers again as directed by the Engineer. All rolling passes shall be made at speeds that will not displace aggregates.

After the maximum amount of aggregate has been embedded into the emulsions, all loose material shall be swept or otherwise removed at such time and in such manner that will not displace embedded aggregate or damage emulsions. Sweepers shall not use gutter brooms at any time. Surface treatments that are to be overlaid within six (6) hours of placement shall only require a light sweeping, unless traffic has been allowed to pass over the surface.

9.8.3 Measurement and Payment

Payment for surface treatments, SAM and/or SAMI, shall be made on a per square yard basis, and payment figure shall include all roadway sweeping or cleaning, patching, crack sealing, emulsion and aggregate applications, rolling and follow-up sweeping.

Payment Items

		Unit
9.8.3a	Asphalt-latex, Stone Aggregate SAM	Square Yard
9.8.3b	Asphalt-latex, Stone Aggregate SAMI	Square Yard

9.9 COLD PLANING (Milling)

9.9.1 General

The Contractor shall provide all labor, equipment and materials necessary for the cold planing of bituminous concrete roadway surfaces.

The equipment used for cold planing (milling) of pavement surfaces shall be a power operated self-propelled track machine capable of removing in one pass, a layer of bituminous material nine (9) feet in width, with a minimum depth of cut equal to two (2) inches.

The cold planer shall be equipped with an elevating device capable of loading planed material directly into waiting dump trucks. It shall have all necessary safety devices such as reflectors, headlights, taillights, flushing lights and back-up signals so as to operate safely in traffic. The planer shall be designed and built for planing flexible pavements and possess the ability to mill cement concrete patches when encountered in' bituminous concrete pavement. All planing machinery shall be equipped with dust-control devices to prevent any dust produced in the cutting operation from becoming airborne. The machine shall be able to be adjusted for both crown and depth and shall meet the federal, state and local control standards for noise and air pollution.

9.9.2 Construction Requirements

The bituminous concrete pavement surface being planed shall be removed to the depth, width, grade and cross-section as directed by the Engineer. When planing, variable lacing patterns shall be provided to permit a rough grooved or smooth surface as required. The milled surface shall conform generally to the grade and cross-section of the original section and shall not be torn, gouged, shoved, broken or excessively grooved. It shall be free of imperfections in workmanship that prevent resurfacing after milling. Surface texture shall be as specified by the Engineer and excess material shall be removed so that the surface is traversable by traffic, as determined by the Engineer.

At the option of the Engineer all material that has been cold planed or milled shall remain the property of the Town of Needham and delivered to a specified site in the Town, or shall be disposed of by the Contractor to a site of his choosing at no additional cost to the Town.

9.9.3 Measurement and Payment

Cold planing or milling of bituminous concrete pavement surfaces will be measured by the actual number of square yards completed. Payment for work completed shall be at the unit price bid per square yard, regardless of the depth cold planed.

Payment Items

		Unit
9.9.3	Cold Planing (Milling)	Square Yard

9.10 CURBING AND EDGING

9.10.1 General

The Contractor shall provide all curb, curb corners and/or edging on a gravel foundation in accordance with these specifications and in close conformity with the lines, grades, cross-sections and details shown on the plans or established by the Engineer.

9.10.2 Construction Requirements

Curbing and edging materials shall conform to the Massachusetts Department of Public Work's Standard Specifications for Highways and Bridges, 1988 Edition, (MDPW Specifications) Section M9.04.0 and M9.04.1 Type VA4.

After the pavement binder course has been installed and accepted by the Engineer, the Contractor shall excavate an 18 inch wide by 18 inch deep trench along the centerline location of the proposed curbing. The trench shall be backfilled to a depth of at least 6 inches with gravel borrow, type c as specified in Section 5.6.1 and compacted with a vibratory plate compactor or other equipment approved by the Engineer to the same tolerances specified for the gravel sub-base course identified in Section 9.2. Care shall be taken not to undermine the adjacent pavement binder course throughout the installation process. The Contractor shall set the curbing on additional gravel borrow spread on the gravel foundation sufficient to fill all spaces under the curb so that the curb will be completely supported along its entire length. The curb shall be set at the required line and grade as shown on the plans or as directed by the Engineer. Each curb length shall be fitted together with no more than a 1/4 inch gap between lengths. The gap shall be completely filled with cement mortar meeting MDPW Specifications M4.02.15. Any excess mortar which has been forced out of the joint shall be removed flush with the joint. The Contractor shall take sufficient care during the curb installation process to ensure that the curbing tops and gutter faces are aligned properly to create a neat and uniform appearance. Any curb lengths which are not satisfactory to the Engineer shall be reset as directed. The curbing shall have a six-inch concrete pour, as shown on the plans. After the curbing has been set, the space

between it and the wall of the trench shall be completely filled with gravel borrow type c meeting Section 5.6.1 and thoroughly tamped to the depth shown on the plans or as directed by the Engineer. The Contractor shall take sufficient care not to affect the line or grade of the curb during the backfilling or compaction process. The remainder of the gravel base course shall then be placed and pavement binder course completed to the newly formed gutter line in accordance with these specifications.

Where handicap access ramps are proposed, the Contractor shall provide transition curbs in accordance with the contract plans or as directed by the Engineer. Transition curbs shall be of the same type curb and similar in appearance to that abutting and, if on a curve, of the same radius.

9.10.3 Measurement and Payment

The length of curb, for both new curb and curb to be removed and stacked, shall be measured along the front arris of the curb. Payment will be based on the contract unit price per linear foot for each item and shall include all labor materials and equipment required to provide curbing complete and in place in accordance with these specifications and as shown on the contract plans. Payment for three foot radius will be paid for per unit each completed.

Payment Items

		Unit
9.10.3a	Vertical Granite Curb (Straight Section)	Linear Foot
9.10.3b	Vertical Granite Curb (Radius Section)	Linear Foot
9.10.3c	Vertical Granite Curb 3 ft. Radius Nose Rounding	Each
9.10.3d	Curb Removed & Stacked	Linear Foot

9.11 SIDEWALKS, HANDICAP ACCESS RAMPS AND DRIVEWAY APRONS

9.11.1 General

This work shall consist of the construction of bituminous concrete or cement concrete sidewalks, handicap access ramps and driveway aprons in accordance with these specifications and in close conformity with the lines and grades shown on the plans or established by the Engineer.

9.11.2 Construction Requirements

The sub-grade for the sidewalks, ramps and driveway aprons shall be shaped parallel to the proposed surface of the walks, ramps and driveways and thoroughly

compacted. All depressions occurring shall be filled with suitable material and again compacted until the surface is smooth and hard.

After the sub-grade has been prepared, a foundation of gravel, meeting Section 5.6.1, Type c shall be placed upon it and thoroughly compacted. The foundation shall be at least 8 inches in thickness and parallel to the proposed surface of the walk.

The Contractor shall set and secure in place forms for the placement of concrete for cement concrete sidewalks, ramps and driveway aprons. Side forms and transverse forms shall be smooth, free from warp- of sufficient strength to resist springing out of shape, of a depth to conform to the thickness of the proposed walk or ramp and of a type satisfactory to the Engineer. All mortar or dirt shall be completely removed from forms that have been previously used. The forms shall be well staked and set to the established lines with their upper edge conforming to the grade of the finished walk or ramp which shall have sufficient pitch to the roadside edge to provide for surface drainage but not to exceed 1/4 of an inch per foot unless otherwise directed. All forms shall be oiled before placing concrete.

Concrete meeting MDPW Specifications for air-entrained, Type II, 4000 psi cement concrete with 3/4 inch coarse aggregate shall be placed in alternate slabs 30 feet in length except as otherwise ordered. The slabs shall be separated by transverse preformed expansion joint filler, 1/2 inch in thickness, meeting MDPW Specifications M9.14.0.

Preformed expansion joint filler shall also be placed adjacent to or around existing structures as directed.

On the foundation, as specified above, the concrete shall be placed in such quantity that after being thoroughly consolidated in place, it shall be 4 inches in depth. No finishing operation shall be performed while free water is present. Finishing operations shall be delayed until all bled water and water sheen has left the surface and the concrete has started to set. When the water sheen has disappeared, edging operations, where required, shall be performed. After edging and jointing operations are completed, the surface shall be floated. Immediately following floating, the surface shall be steel-troweled. If necessary, tooled joints and edges shall be rerun before and after troweling to maintain uniformity. After Troweling, the surface shall be brushed by drawing a soft-bristled push broom with a long handle over the surface of the concrete to produce a nonslip surface.

When conveying the concrete from the plate of mixing to the place of deposit, the operation shall be conducted in such a manner that no mortar will be lost, and the

concrete shall be so handled that it will be of uniform composition throughout, showing neither excess nor lack of mortar in any one place.

The surface of all concrete sidewalks shall be uniformly scored into block units of areas not more than 36 square feet. The depth of the scoring shall be at least one quarter of the thickness of the sidewalk.

The application of neat cement to surfaces in order to hasten hardening is prohibited.

The finishing of concrete surfaces shall be done by experienced and competent cement finishers approved by the Engineer.

When completed, the walks shall be kept moist and protected from traffic and weather for at least 3 days until they have sufficiently cured to withstand the loads to which they will be subjected.

Bituminous concrete sidewalks, handicap access ramps and driveway aprons shall use forms as specified above where walls, curbing or other suitable permanent supports are not present or where an approved mechanical spreader is not used to assist in securing proper alignment and adequate compaction of the base and surface courses.

The bituminous concrete walk surface shall be laid in 2 courses to a depth after rolling of 3 inches. The bottom course shall be 2 inches in thickness, and its surface after rolling shall be 1 inch below and parallel to the proposed grade of the finished surfaces. The top course shall be 1 inche in thickness after rolling.

Unless otherwise directed, the surface shall have a pitch of 1/4 of an inch per foot of width to provide for proper drainage.

The courses shall be constructed in accordance with the applicable requirements of the MDPW Specifications, Section 460, and the following provisions:

1. **Spreading Mixture -** The mixture shall be dumped, as needed, in wheelbarrows or on approved steel dump sheets outside the areas on which it is to be placed. It shall then be immediately distributed into place by means of shovels and raked into a uniformly loose layer to the full width required and of such depth that, when the work is completed, it shall conform to the grade and surface contour required. An approved mechanical spreader may be used.

2. **Rolling -** The surface shall be rolled with a self-propelled tandem roller weighing not less than 1-1/2 tons and not more than 5 tons. In places

inaccessible to a power roller, compaction shall be obtained by means of mechanical rammers or by hand tampers weighing not less than 50 pounds and having a tamping face not exceeding 100 square inches.

3. **Testing Surface -** When tested with a 10-foot straightedge placed parallel to the centerline of the courses, there shall be no deviation from a true surface in excess of 1/4 of an inch.

All handicap access ramps and driveway aprons shall conform to the lines, grades and slopes shown on the contract plans or as directed by the Engineer.

9.11.3 Measurement and Payment

Cement concrete walks, handicap ramps and driveway aprons will be measured in place by the square yard. Bituminous concrete walks, handicap ramps and driveway aprons will be measured by the ton. Gravel borrow will be measured by the cubic yard as specified in Section 5.6.1. Fine Grading and Compacting (in sub-grade areas) will be measured by the square yard.
Concrete Sidewalks, Handicap Access Ramps and Driveway Aprons will be paid for at the contract unit price per square yard and shall include all labor, materials and equipment required to provide them complete and in place in accordance with these specifications and as shown on the contract plans.

Bituminous concrete for the walk surface, handicap ramps and driveway aprons will be paid for at the contract unit price per ton and shall include all labor, materials and equipment required to provide them complete and in place in accordance with these specifications and as shown on the contract plans.

Gravel borrow will be paid for at the contract unit price per cubic yard under Section 5.6.1 Gravel Borrow, Type C.

Fine Grading and Compacting will be paid for at the contract unit price per square yard under Section 5.7 Fine Grading and Compacting (in sub-grade areas).

Excavation will be paid for at the contract unit price per cubic yard under Section 5.4.9a Common Excavation, or Section 5.4.9b Class A Rock Excavation.

Payment Items

		Unit
9.11.3a	Concrete Sidewalk	Square Yard
9.11.3b	Concrete Handicap Ramp	Square Yard
9.11.3c	Concrete Driveway Apron	Square Yard

9.11.3d	Bituminous Concrete Walk Surface	Ton
9.11.3e	Bituminous Concrete Handicap Ramp	Ton
9.11.3f	Bituminous Concrete Driveway Apron	Ton

9.12 RECONSTRUCTION OF DRIVEWAYS & WALKWAYS

9.12.1 General

The Contractor shall provide all labor, materials and equipment required to reconstruct existing driveways and walkways from the back edge of sidewalk to the limit shown on the plans or as directed by the Engineer.

9.12.2 Construction Requirements

Prior to entering upon privately owned land, the Contractor shall obtain written permission from the owner(s) of the property to reconstruct their driveway and or walkway.
Bituminous concrete driveways shall be reconstructed in accordance with the specifications for bituminous concrete sidewalks and as directed by the Engineer.

9.12.3 Measurement and Payment

Reconstruction of existing driveways and walkways shall be measured in square yards.

Payment will be based on the contract unit price per square yard and shall include all labor, materials, equipment and incidentals required to excavate, fill, regrade and compact the sub-base and base materials and construct the binder and top pavement courses in accordance with these specifications.

Payment Items

		Unit
9.12.3a	Reconstruct Existing Driveways	Square Yard
9.12.3b	Reconstruct Cement Concrete Walkway	Square Yard
9.12.3c	Reconstruct Flagstone Walkway	Square Yard
9.12.3d	Reconstruct Bituminous Concrete Walkway	Square Yard
9.12.3e	Reconstruct Brick Walkway	Square Yard

9.13 GUARD RAILS

9.13.1 General

The Contractor shall furnish all labor, materials, and equipment necessary for the installation and/or removal and resetting of roadway guard rail.

When new guard rail is to be installed, the work shall include the assembly and erection of all components, parts and materials complete at the site for all locations shown on the contract plans or as directed by the Engineer.

When existing guard rail is to be removed and reset, the materials removed shall be utilized in the reset except that new posts shall be furnished by the Contractor, if found unsuitable for re-use by the Engineer. Any materials damaged or lost during or subsequent to removal shall be replaced by the Contractor without compensation.

Construction of any guard rail shall follow in close conformity with the lines and grades as shown on the contract plans, or as established by the Engineer.

9.13.2 Construction Requirements

All guard rail posts shall be set plumb, in holes excavated mechanically or by hand and then backfilled with suitable material and thoroughly compacted as approved by the Engineer. If a post driver is used, a suitable driving cup shall be provided to prevent deformation of the post. Any post which becomes damaged through negligence or improper techniques shall be removed and replaced by the Contractor without additional compensation.

Any posts which are to be set within areas of bituminous concrete surfaces shall be set prior to laying the final top surface, unless otherwise directed by the Engineer.

If timber posts are utilized, they shall have been treated at the plant with an approved preservative or pressure-treated.

Any timber cutting done on site, exposing an untreated surface, shall be retreated with similar preservatives and processes as done at the plant.

All timber posts shall have a sloping top, so as not to catch rainwater. All spacing of posts shall be as shown on the contract plans.

If steel rail is used, it shall be erected so as to form a smooth continuous railing consistent-with the required line and grade, and shall be spliced together by

overlapping-sections in the direction of the traffic flow. All rails shall make full contact at each splice. The holes in the rail section nearest the posts shall be slotted to facilitate erection and also to permit expansion.

All bolts shall be fully tightened, except where expansion joints are located. At these points along the rail, the bolts shall be tightened sufficiently to allow a longitudinal sliding movement.

If timber rail is used, care shall be taken when handling, so as not to cause breakage of outer fibers, bruising or penetrating the surface with the improper use of tools. The Contractor shall keep available at the site the preservatives and equipment necessary for brush coating all treated timber that has been bored for fasteners or otherwise cut after treatment. The preservatives applied at the site shall be the same grade and concentrations as used at the plant, and shall be applied in two coats in accordance with the manufacturer's specifications. All holes that remain unfilled shall be treated with a pressure bolt-hole treater and closed with a treated plug.
Galvanized washers shall be used behind all bolt heads and nuts which come in contact with the timber, fiberglass, or composite planks.

All fasteners shall conform to Section M8.01.5 of the Massachusetts Department of Public Works Standard Specifications for Highways and Bridges, 1988 Edition.

9.13.3 Measurement and Payment

All steel guard rail shall be measured along the top edge of the rail section from center to center of end posts.

All timber, guard rail shall be measured along the top edge of the rail section from the trailing end to the leading end.

All guard rail will be paid for at the contract unit price per linear foot and shall include all labor, materials and equipment required to provide the guard rail complete and in place in accordance with these specifications and as shown on the contract plan.

Payment Items

		Unit
9.13.3a	Guard Rails (Steel)	Linear Foot
9.13.3b	Guard Rails (Timber)	Linear Foot
9.13.3c	Guard Rails Removed and Reset	Linear Foot

9.14 PAVEMENT MARKINGS

9.14.1 General

This item of work consists of providing Reflectorized Pavement Markings in accordance with the Commonwealth of Massachusetts, Department of Public Works, Manual on Uniform Traffic Control Devices, current edition.

9.14.2 Construction Requirements

All materials and construction requirements shall conform to the Commonwealth of Massachusetts Department of Public Works Standard Specifications for Highways and Bridges, 1988 Edition and these specifications.

9.14.3 Measurement and Payment

Markings will be measured in place by the linear foot. Only the actual length of lines applied in accordance with these specifications shall be considered for payment.

The lengths of solid lines shall be obtained by the use of a measuring wheel. The lengths of broken lines shall be the actual length of line applied in accordance with these specifications and as shown on the contract plans less the spacing length. Patterns, other than lines will be measured by the square foot.

The work under these items shall be paid for at the contract unit price based on the measurements as determined by the Engineer. The contract unit prices shall include all materials, labor, equipment and incidentals required to provide the pavement markings in place in accordance with these specifications and as shown on the contract plans and as directed by the Engineer.

Payment Items

		Unit
9.14.3a	Reflectorized Painted Line, ___Inch Width	Linear Feet
9.14.3b	Reflectorized Thermoplastic line, 4 Inch Width	Linear Feet
9.14.3c	Reflectorized Thermoplastic line, 12 Inch Width	Linear Feet
9.14.3d	Reflectorized Thermoplastic line, 24 Inch Width	Linear Feet
9.14.3e	Pavement Arrow and Legend, Painted	Square Feet
9.14.3f	Pavement Arrow and Legend, Thermoplastic	Square Feet

9.15 ROADWAY SIGNAGE/PARKING METERS

9.15.1 General

The Contractor shall provide all labor, materials and equipment necessary to permanently relocate existing street signage or parking meters, and provide new signs in accordance with these specifications and as shown on the contract plans or as directed by the Engineer.

9.15.2 Construction Requirements

The Contractor shall remove and reset in accordance with the Manual on Uniform Traffic Control Devices all street signage proposed to be relocated as shown on the contract plans or as directed by the Engineer. Existing street sign posts which do not conform to the details and specifications of the contract shall be replaced with materials furnished by the Owner and installed by the Contractor in accordance with these Specifications. Parking meters shall be relocated complete with their posts. The existing foundations shall be broken off to the extent practicable without damage to the post. The relocated meters shall set in a new concrete foundation.

All new signs shall meet the requirements of the Massachusetts Highway Department Standard Specifications for Highways and Bridges, aluminum sign panels (type A) as specified in Section 828. Signs shall be attached and erected on standard P-5 break away post assemblies also defined in Section 828 of the Standard Specifications.

Signs within the project limits indicated to be removed and stacked on the contract plans or as directed by the Engineer will be removed by the Contractor and delivered to a site designated by the Engineer.

9.15.3 Measurement and Payment

Relocating existing roadway signage and parking meters shall be paid for per sign or parking meter relocated and shall include all labor, materials (except as furnished by the Owner) and equipment required to remove and reset the existing sign or meter and post in accordance with these Specifications or as directed by the Engineer.

Measurement and payment for new sign panels will be per the total square footage of new panels delivered to the site and erected to posts. All miscellaneous attachment appurtenances are considered incidental to the item.

Posts will be paid for at the unit bid price for each which includes materials, labor, tools, equipment and work needed to erect the post in accordance with the Massachusetts Highway Department Construction Standards. Signs removed and stacked will be paid for at the unit price for each.

Payment Items

		Unit
9.15.3a	Relocate Street Sign	Each
9.15.3b	New Street Sign	Square Foot
9.15.3c	New Post	Each
9.15.3d	Remove and Stack Sign	Each
9.15.3e	Remove & Relocate Parking Meter	Each

9.16 INFRA-RED APPLICATIONS

9.16.1 General

The Contractor shall provide all labor, materials, and equipment necessary for the permanent patching, blending and bonding of trenches, potholes, or other pavement depressions by the application and utilization of infra-red heaters as shown on the contract plans or as directed by the Engineer.

When depressions in the surface are treated, the pavement shall be heated until it is soft and able to be raked, then the required amount of new hot plant mix shall be added, raked to grade and compacted.

9.16.2 Construction Requirements

No infra-red bonding shall be performed on paved surfaces less than 90 days old. Areas to be repaired shall be swept clean to remove all loose and foreign materials. An approved infra-red heater not to exceed 15,000 BTU's per square foot shall be positioned over the area to be repaired for the period of time required to soften the existing pavement for a depth of one and one half (1-1/2) or more inches. Oxidation of the pavement, caused by excessive heat, as determined by the Engineer, shall be avoided. The Contractor shall remove the unsuitable material in the event of oxidation and replace it with new bituminous concrete at his own expense.

A recycling agent admixture in the amount approved by the Engineer shall be added to the softened area after scarification and shall be raked to a workable condition. Any necessary additional bituminous concrete mix must be obtained from a suitable infra-red heated storage unit required to keep asphalt at near constant temperature throughout the working day. Under no circumstances is any asphalt mix to be used that registers a temperature of less than 200 F.

After the paving mixture has been properly admixed and raked to grade, compaction shall be obtained by use of steel wheeled rollers of sufficient weight to establish a uniform density comparable to that of adjacent surfaces within the work area. The finished patch shall be level with no depression retaining water on any of its surfaces. The edges of the finished area shall be sealed with a suitable asphalt emulsion RS-1 or equal, around the perimeter of the newly repaired area. (See AASHTO-M208). A cationic maltenes emulsion sealant shall then be hand sprayed on the patched area and adjacent edges at the approximate rate of one tenth (0.1) gallon per square yard to seal the entire newly treated area. Sand shall then be spread over the newly sealed area. After the treated area has cured, the work area shall be swept clean of all excess materials, and left in a neat condition.

9.16.3 Measurement and Payment

All infra-red applications shall be measured by the square foot and shall include all materials necessary to provide a satisfactory patch. Work which does not conform to these specifications as determined by the Engineer, shall be reapplied at the Contractor's expense.

Payment for infra-red applications shall be per square foot of area patched.

Payment Items

	Unit
9.16.3 Infra-Red Application	Square Foot

9.17 POTHOLE REPAIR

9.17.1 General

The Contractor shall provide all labor, materials, equipment and incidentals required for the permanent repair of potholes in accordance with these specifications and as shown on the contract plans or as directed by the Engineer.

9.17.2 Construction Requirements

The Contractor shall adhere to the following procedure when repairing potholes:

1. The pothole shall be outlined with paint by the Engineer prior to the Contractor's work. The marking shall identify the limits of the repair. Potholes which have not been marked shall not be repaired by the Contractor and any unmarked pothole repair work by the Contractor shall not be paid.

2. The pavement within the limits painted on the surface shall be completely removed and disposed of by the Contractor. The pavement shall be cut by means of a pavement breaker approved by the Engineer or shall be saw-cut. Cuts through the pavement shall be perpendicular to the surface plane, true to line and neat in appearance.

3. The Contractor shall remove the base material to a minimum depth of 8 inches or as directed by the Engineer and replace it with new gravel base course material and compacted in accordance with Section 9.2 of these specifications. Any water existing in the pothole shall be completely removed by the Contractor prior to placing the new base course material. The gravel base shall be brought up to the bottom of the surrounding pavement but not higher than 3-1/2 inches from the existing pavement surface. The Contractor shall take care not to undermine the existing pavement during the repair process.

4. Pavement binder course meeting Section 9.5 shall be laid and compacted on the gravel base course up to a distance of 1-1/2 inches from the existing pavement surface.

5. The newly laid pavement binder course and surrounding joint shall be sealed with asphalt emulsion.

6. Pavement top course meeting Section 0.6 shall be laid and compacted on the binder course up to the existing pavement surface.

7. The surface of the newly laid top course and surrounding joint shall be sealed with asphalt emulsion and sanded.

The procedure outlined herein shall be considered as the minimum requirements for permanently repairing potholes in bituminous concrete surfaces and in no way shall they relieve the Contractor of his responsibility to permanently repair the

pothole. Should any pothole repaired by the Contractor redevelop or the newly repaired surface warp or deform more than 1/2 inch within one (1) year of the date of repair, the Contractor shall re-perform the repair.

9.17.3 Measurement and Payment

Measurement and Payment for pothole repair shall be per square foot of area patched. Payment shall include all labor, materials and equipment required to permanently repair the pothole in accordance with these specifications and as shown on the Contract plans.

Payment Items

		Unit
9.17.3a	Pothole Repair	Square Foot

9.18 PORTABLE MESSAGE SIGNS

9.18.1 General

The Contractor shall provide portable changeable message signs for the purpose of traffic control during construction activities. The portable message signs shall be purchased new for the project, and by turned over for ownership by the Town of Needham when the project is complete. The signs shall be available for use at the start of construction. The contractor shall exercise care in the use of the signs during construction activities. Any signs showing evidence of undue damage, or inoperable shall not be accepted by the Town.

9.18.1.2 Material Requirements

The portable changeable message board shall be a trailer mounted, all LED, full matrix changeable message sign utilizing 22o ITE amber LED's. It shall be capable of solar charging of the primary power supply batteries. The sign shall be four feet high and eight feet wide, and shall be capable of displaying one to three lines of alphanumeric messages. Additionally, the sign shall be capable of displaying graphic messages consisting of standard MUTCD construction zone signs, and arrow board functions. The brightness and intensity of the LED display shall controlled manually, or be automatically controlled with a photosensitive circuit.

9.18.1.3 Submittals

The contractor shall submit shop drawings or catalog cuts of the portable changeable message sign for approval by the Town of Needham DPW.

9.18.1.4 Measurement and Payment

Portable changeable message signs shall be measured and paid for EACH. Payment for the signs shall not be made until the sign has been turned over to the Town of Needham DPW.

Payment Items

		Unit
9.18.1a	Portable Changeable Message Sign	Each

9.19 TEMPORARY PAVEMENT

9.19.1 General

The temporary pavement course shall be composed of mineral aggregate, mineral filler and bituminous material. The temporary surface course shall be constructed in one (1) two (2) inch layer of hot bituminous mix, compacted thickness, as shown on the contract plans or as directed by the Engineer. The temporary course shall be spread and compacted on the prepared or existing binder course in accordance with these specifications and in close conformity with the lines, grades, compacted thickness and typical cross-section shown on the contract plans or as directed by the Engineer.

The temporary pavement shall be placed over all trenches in paved areas where directed by the Engineer at minimum of weekly.

The Contractor, upon completing the backfilling and compaction of the trenches in the streets and the placing of the gravel base courses, shall be required to construct temporary pavement unless otherwise directed by the Engineer.

9.19.2 Construction Requirements

The temporary pavement shall be constructed in accordance with Section 460 of the MHD Specifications. The temporary pavement shall be Class I Bituminous Concrete Surface Course, Type I-1 "Top Course" as specified above.

The Engineer may require the Contractor to remove and replace at the Contractor's own expense, any defective mix not conforming to these specifications or contract plans. The Engineer may, at his discretion, require that laboratory tests be performed to assure compliance with material composition or

compaction specifications. The Engineer's decision to remove defective mix will be based on the results of said testing which shall be conducted in accordance with the relevant portion of Section 400 of the Commonwealth of Massachusetts Highway Department Standard Specifications for Highways and Bridges, 1988 (MHD Specifications) except as herein specified. The costs for such tests shall be borne by the contractor. The Contractor shall maintain temporary pavement in good repair and flush with the existing pavement at all times until permanent pavement is placed. The temporary pavement shall not be removed until 60 days after installation or until such time that the engineer authorizes the placement of permanent pavement at an earlier time.

9.19.3 Measurement and Payment

The temporary pavement course shall be measured by the ton and shall be the actual and verified tonnage, complete in place and approved. The quantity shall be determined only by weight slips that have been properly counter-signed by the Engineer at the time of delivery. Payment shall be for the initial installation of the temporary pavement course. Contractor is responsible for maintaining, repairing, and removing temporary pavement course and all associated costs shall be borne by the Contractor.

Payment Items

		Unit
9.19.3a	Class I Temporary Pavement Course, Type 1-1	Ton

9.20 PEDESTRIAN AND VEHICLE MANAGEMENT

9.20.1 General

The Contractor shall furnish, install, maintain, and remove from the site at the end of the project all necessary temporary traffic control devices as shown on the Drawings or as directed by the Engineer, for the management of pedestrian and vehicle protection and safety. All temporary traffic control devices shall conform to the latest version of the “Manual on Uniform Traffic Control Devices” (MUTCD) and all revisions.

All temporary traffic control devices shall be in place prior to the start of any work.

Temporary traffic control devices necessary for the management of pedestrian and vehicle safety and not covered in the Drawings, shall refer to MASSDOT

"Standard Details and Drawings for the Development of Traffic Management Plans".

9.20.2 Measurement and Payment

Payment for pedestrian and vehicle management shall be on a lump sum basis. The lump sum bid price shall include all costs for labor, equipment, and services for furnishing, installing, maintaining, moving, adjusting, relocating, storing, and removal from site upon completion of the work, all barricades, drums, traffic cones, and other traffic control devices as shown on the Drawings or as directed by the Engineer.

Payments will be made on a monthly basis as a percentage of the lump sum bid and the amount of work for that particular month.

Payment for temporary construction and traffic control signs shall not be paid for under this item, but shall be paid for under Item 9.21.2a Temporary Construction and Traffic Control Signs.

Payment Items

		Unit
9.20.2a	Pedestrian and Vehicle Management per MUTCD	Lump Sum

9.21 TEMPORARY CONSTRUCTION AND TRAFFIC CONTROL SIGNS

9.21.1 General

The Contractor shall furnish, install, maintain, and remove from the site at the end of the project all necessary temporary construction signage as shown on the Drawings or as directed by the Engineer. All traffic signage shall conform to the latest version of the "Manual on Uniform Traffic Control Devices" (MUTCD) and all revisions. All sign legends, borders, and mounting shall be in accordance with the MUTCD.

All temporary construction signage shall be in place prior to the start of any work.

Temporary construction signage necessary to complete the work and not covered in the Drawings, shall refer to MASSDOT "Standard Details and Drawings for the Development of Traffic Management Plans".

9.21.2 Measurement and Payment

Payment for temporary construction and traffic control signs shall be paid for by the square foot of the sign face and shall include all costs for labor, equipment, and services for furnishing, installing, maintaining, moving, adjusting, relocating, storing, and removal from site upon completion of the work, all signage and sign post as shown on the Drawings or as directed by the Engineer.

Any temporary construction and traffic control signs that are missing, damaged or defaced so they are not effective as determined by the Engineer, shall be replaced by the Contractor at no additional cost to the Owner.

Payment Items

		Unit
9.21.2a	Temporary Construction and Traffic Control Signs	Lump Sum

9.22 RECONSTRUCTION OF BITUMINOUS CURB

9.22.1 General

Bituminous curb that is removed or damaged by the Contractor's operations shall be restored to a condition at least equal to that in which they are found immediately prior to the start of operations. Materials and methods used for such reconstruction shall be in conformance with the requirements of the MDPW Standard Specification.

9.22.2 Measurement and Payment

Measurement and payment for the reconstruction of bituminous curb shall be the linear foot and shall include all labor, materials and equipment required to install the bituminous curb complete and in place.

Payment Items		Unit
9.22.2a	Reconstruction of Bituminous Curb	Linear Foot

SECTION 10 TREE PROTECTION, PRUNING AND FERTILIZING

10.1 DEFINITIONS

The following related items are included herein and shall mean:

1. Pruning Standards: The "Standards for Pruning Shade Trees" of the National Arborist Association, 174 Route 101, Bedford, New Hampshire 03102.

2. "Guide for Establishing Values of Trees and Other Plants", as published by the International Society of Arboriculture, Urbana, Illinois.

10.2 EXAMINATION OF SITE AND DOCUMENTS

If, in the course of the Engineer's determination of any liability for damage to trees, shrubbery, lawns and property, the contractor disputes either the Engineer's determination of liability or the charges for damage to plants or property the Contractor must provide photographs of pre-existing conditions to the Engineer to substantiate the Contractor's contentions.

10.3 QUALITY ASSURANCE

Pruning, tree removal, fertilizing and mycorrhizal inoculation of trees shall only be performed by certified arborists who are familiar with the techniques and hazards of arboricultural work including trimming, maintenance, repairing or removing trees, and the equipment used in such operations. All tree workers should be covered by worker's compensation, property damage, public liability and completed operations insurance.

Further, the above mentioned work shall only be performed by certified arborists with five (5) years experience in the field of arboricultural work.

10.4 TREE PROTECTION MATERIALS

10.4.1 Fencing

Fencing for tree protection, as designated, shall be new four foot (4') height wood lath snow fencing, painted red. Stakes for snow fence shall be six foot (6') long stamped metal drive stakes, commonly used to support snow fence.

10.4.2 Lumber

Tree protection lumber, as designated, shall consist of 2"x4" and 2"x3" lumber, wired together with 16 gauge galvanized steel wire to form a protective enclosure around tree trunks.

10.5 TREES AND SHRUBS - GENERAL

Prior to starting any construction operations, stake out the limits (from the roadway center line) of all sidewalk excavation, sidewalk construction, and roadway construction.

Before any tree removal, pruning, sidewalk demolition or roadway excavation is done, the Contractor shall arrange a conference on the site with the Engineer to identify trees and shrubs which are to be protected or removed. Do no construction without a clear understanding of existing conditions to be preserved.

The Contractor shall be responsible for the protection of all existing trees and plants designated to remain for the length of the construction period, including liability for all damages as specified herein. The placement of protection devices additional to those specified shall, however, be at the Contractor's discretion.

10.6 TREE AND SHRUB PROTECTION

All residential property shall be fenced with the specified snow fencing prior to the commencement of construction activity in the vicinity of the individual private house lot. Snow fencing shall be placed at the limit of work at the back of sidewalk. Fencing shall not obstruct pedestrian or vehicular access to the private lot.

Trees which are within ten feet (10') of the back of sidewalk shall be protected by wiring 2" x 4" or 2" x 3" lumber closely spaced in vertical alignment around the trunk of each tree.

Tree and shrub protection shall remain in place until directed for removal by the Engineer.

No plants to be saved shall be used for crane stays, guys or other fastenings. Vehicles and equipment shall not be driven or parked on the grounds of the private house lots or where any damage may result to roots of the trees to be saved. Construction materials shall not be stored on any private house lot or beneath trees to be saved.

10.6.1 Maintenance Program

Establish and carry out maintenance program as approved by the Engineer for all trees and plants to be saved within the work limits throughout the time of construction. As a minimum, the maintenance program shall include the following:

a. Watering during drought periods.

b. Regular fertilizing.

c. Spraying for insect and fungus control as required.

d. Removal and disposal of debris generated by maintenance activities.

10.6.2 Liability for Damages

The Contractor shall be liable for all damage and/or disturbance to existing trees and shrubs not otherwise designated for removal. Actual charges for damage to plants shall be in accordance with the schedules defined herein, with assessed charges to be deducted from sums payable under the Construction Contract.

a. Damage which, in the Engineer's opinion, can be remedied by corrective maintenance shall be repaired immediately.

b. Trees or shrubs which are damaged irreparably shall, at the Engineer's discretion, be replaced by the Contractor with new trees or shrubs of the same size and type.

c. In the event that replacement of damaged trees is infeasible or impractical as determined by the Engineer, the full replacement costs will be assessed to the Contractor's account at a minimum value of fifty dollars ($50.00) per square inch of cross-sectional area or greater in accordance with "Valuation of Landscape Trees, Shrubs and Other Plants".

10.6.3 Removal of Damaged Trees and Shrubs

Damaged trees or shrubs which require removal and/or replacement shall be removed as noted below:

a. Remove all trees, stumps, brush, vegetation, downed timber, rubbish, organic matter and other rubbish or extraneous debris.

b. Fell trees in such a way as to not injure other trees to be saved.

10.7 PRUNING

All trees which overhang the back of sidewalk line or are within the public Right-of-Way line shall be pruned in accordance with Class III - Hazard Pruning in accordance with the Pruning Standards noted herein and shall consist of the following:

a. All cuts shall be made as close as possible to the trunk or parent limb, without cutting into the branch collar or leaving a protruding stub. Bark at the edge of all pruning cuts should remain firmly attached.

b. All branches too large to support with one hand shall be precut to avoid splitting

or tearing of the bark. Where necessary, ropes or other equipment should be used to lower large branches or stubs to the ground.

c. Treatment of cuts and wounds with wound dressing or paints is prohibited.

d. Old injuries are to be inspected. Those not closing properly and where the callus growth is not already completely established should be bark traced if the bark appears loose or damaged. Such tracing shall not penetrate the xylem (sapwood), and margins shall be kept rounded.

e. Equipment that will damage the bark and cambium layer shall not be used on or in the tree. For example, the use of climbing spurs (hooks or irons) is not acceptable for pruning operations on live trees. Sharp tools shall be used so that clean cuts will be made at all times.

f. All cut limbs shall be removed from the crown upon completion of the pruning.

g. The presence of any disease condition, fungus fruit bodies, decayed trunk or branches, split crotches or branches, cracks, or other structural weakness should be reported in writing to the Engineer and corrective measures recommended.

h. Remove all dead, diseased, decayed and obviously weak branches, two inches in diameter or greater.

10.8 FERTILIZING

Fertilization of designated trees shall be by soil injection of liquid fertilizer. The fertilizer shall be mixed with water and injected into the soil under pressure using a hydraulic sprayer and a feeding needle.

Sprayer pressure shall be set to 100-200 psi.

Injection points shall be spaced three (3') feet on center beneath the dripline of the tree. Place the first band of injections approximately 1/4 the distance from the trunk to the edge of the dripline. Successive bands shall be spaced three (3') feet apart out to one to three feet beyond the edge of the dripline.

The feeding needle shall be inserted nine to twelve inches into the soil. Rotate the feeding needle by 90 degrees during the injection process to ensure distribution of the fertilizer in all directions.

The liquid fertilizer shall be a suspension grade fertilizer design to be mixed and applied in water using a high volume hydraulic sprayer. The liquid fertilizer shall have the following nutrient content:

a. Nutrient Content:

Analysis:		28-9-9
Nitrogen from Ureaform:		21%
Water Insoluble Nitrogen:		14%
Water Soluble Nitrogen:		14%
Micronutrients:	Fe:	10%
	Cu:	.05%
	Mn:	.05%
	Zn:	.05%
Salt Index:		±30

Per unit plant nutrient: 0.65

Mixing rates shall be 40 pounds per 100 gallons of water. Strong mechanical agitation shall be applied to maintain suspension.

Application rates: Apply twenty-five (25) gallons of mixture per 1000 square feet of area beneath dripline. This is equivalent to approximately one quart of mixture per injection hole when applied on a three foot by three foot injection spacing.

Fertilizing of all trees shall occur at the completion of the pipe line excavation and installation project on Leach Lane. But under no circumstances shall fertilization be delayed more than one planting season. Should construction be delayed for any reason, the Contractor shall be required to fertilize all designated trees disturbed up to the time of the construction delay.

10.9 MYCORRHIZAL INOCULATION

Mycorrhizal inoculation of designated trees shall be by soil injection of specified liquid suspended mycorrhizal fungal spores and dry, soluble Yucca plant extract. The mycorrhizal inoculant shall be mixed with water and injected into the soil under pressure using a hydraulic sprayer and a soil probe. Injection of mycorrhizal inoculant shall be performed with professional soil injection equipment. The mycorrhizal inoculant shall be provided in premixed 15 ounce packets. Each packet shall have the following non plant food ingredients:

a. Live spores of VA Endomycorrhizal fungi: minimum 50,000 spores of *Vesicular-Arbuscular* fungi including: *Entrephosora columbiana, Glomus etunicatum, Glomus clarum, and Glomus sp.*

b. Live spores of Ectomycorrhizal fungi: minimum 5 billion spores of *Pisolithus tinctorius.*

c. Acrylamide copolymer gel as a water absorbent gel.

d. *Yucca schidigera*, a dry soluble yucca plant extract.

Sprayer pressure shall be set to 150-200 psi.

Injection points shall be spaced three (3') feet on center beneath the dripline of the tree. Place the first band of injections approximately 1/4 the distance from the trunk to the edge of the dripline. Successive bands shall be spaced three (3') feet apart out to one to three feet beyond the edge of the dripline.

The soil probe shall be inserted nine to twelve inches into the soil. Rotate the feeding needle by 90 degrees during the injection process to ensure distribution of the inoculant in all directions.

Mixing rates shall be 15 ounces per 100 gallons of water. Strong mechanical agitation shall be applied to maintain suspension. Follow manufacturer's instructions for premixing. Application rates: Apply 1/2 gallon at each injection point for the full area beneath dripline of tree.

10.10 EXCAVATION & REMOVAL OF EXISTING PAVEMENT UNDER EXISTING TREES

At trees designated on the plans, remove existing sidewalk pavement without disturbing the compacted granular base beneath the pavement. To protect existing tree roots, remove sidewalk pavement by hand within six feet of designated trees.

After removal of existing sidewalk pavement, retain all existing granular base intact. Supplement existing granular base with approved gravel borrow to the required grades. Compact gravel borrow per pavement specifications herein.

Where excavation of existing loam is required for the construction of new sidewalks, remove all grass sod and loam by hand, limiting loam excavation to a cautious scraping of soil away from the existing tree roots. Do not scrape away more than four inches (4") of existing loam within fifteen feet of designated trees. Under no circumstances shall the Contractor cut, chop, or in any way, sever any roots greater than one inch (1") in diameter.

If the back of the new sidewalk or the edge of new driveway pavement is raised above the adjacent soil grade by more than two inches, then install a side slope of approved loam. Hand excavate existing grass sod or wood mulch, taking care not to damage existing tree roots greater than one inch (1") diameter. Spread new loam from the edge of new pavement at a slope of 5:1. Provide new seed or mulch to match existing conditions.

10.11 PUBLIC HEALTH AND SAFETY

Upon encountering any condition of tree work or tree health which might threaten the public health, safety or welfare and which is not directly addressed by this specification section the certified arborist and the Contractor shall notify the Engineer immediately and shall make recommendations pertaining to the resolution of said conditions.

10.12 MEASUREMENT AND PAYMENT

The Tree protection, maintenance and pruning of trees will be paid for at the contract unit price for each size of tree indicated. The contract unit price for the pruning of all trees shall include the work of tree protection, maintenance and pruning and the removal of all debris from the site at the end of each working day as described in Subsection 10.6.

Fertilizing of existing trees using a spray injection system will be paid for at the contract unit price per square yard. The contract unit price for fertilizing trees shall include the work specified in Subsection 10.8 of this specification.

Mycorrhizal inoculation of trees using a spray injection system will be paid for at the contract unit price per tree. The contract unit price for mycorrhizal inoculation of each tree shall include all work specified in Subsection 5.4.5 unclassified excavation of this specification.

Payment Items

		Unit
10.13a	Tree Protection	Each
10.13b	Tree Maintenance	Each
10.13c	Tree Pruning (Diameter between 3" and 6")	Each
10.13d	Tree Pruning (Diameter between 6" and 12")	Each
10.13e	Tree Pruning (Diameter Between 12" and 18")	Each
10.13f	Tree Pruning (Diameter Between 18" and 24")	Each
10.13g	Tree Pruning (Diameter Between 24" and 30")	Each
10.13h	Tree Pruning (Diameter Greater than 30")	Each
10.13i	Fertilizing Trees	Square Yard
10.13j	Mycorrhizal Inoculation of Trees	Square Yard

10.13 CLEAN UP

Absolutely no debris may be left on the site. Material generated during any of the activities described herein shall be removed from the site at the end of each working day as directed by the Engineer. Repair any damage to site or structures to restore them to their original condition, as directed by the Engineer, at no cost to the Owner.

SECTION 11 LAWNS AND PLANTING

11.1 STANDARDS AND DEFINITIONS

The following standards and definitions shall apply to the work of this Section.

ASNS: "American Standard for Nursery Stock," ANSI Z-60.1, latest edition, published by the American Association of Nurserymen, (AAN).

Hortus III, 1976, L.H. Bailey Hortorium.

AOAC: Association of Official Analytical Chemists.

ASTM: American Society for Testing and Materials.

Pruning Standards: The "Standards for Pruning Shade Trees" of the National Arborist Association, 174 Route 101, Bedford, NH 03102.

ASA: Methods of Soils Analysis, American Society of Agronomy, Soil Science Society of America, Inc., Madison Wisconsin, latest edition.

Tree and Shrub Transplanting Manual, E.B. Himelick, 1991, International Society of Arboriculture.

11.2 SAMPLES AND SUBMITTALS

At least thirty (30) days prior to planting operations, the Contractor shall submit to the Engineer proof of certification of Arborist. Also, at least thirty (30) days prior to intended use the Contractor shall provide the following samples and submittals for approval by the Engineer. Do not order materials until Engineer's approval of samples, certifications or test results has been obtained. Delivered materials shall closely match the approved samples.

11.2.1 Loam Borrow

The Contractor shall provide a one cubic foot representative sample from each source of loam for testing and analysis. Contractor shall deliver samples to testing laboratories and shall have the testing report sent directly to the Engineer. Tests for gradation, organics, soil chemistry and pH shall be performed by an Agricultural Experiment Station testing laboratory approved by the Engineer. Testing reports shall include the following tests and recommendations.

Sieve analysis shall be performed and compared to the USDA Soil Classification System. Sieve analysis shall be by combined hydrometer and wet sieving using sodium hexametaphosphate as a dispersant in compliance with ASTM D 422 after destruction of organic matter by ignition.

Percent of organics shall be determined by the loss on ignition of oven-dried samples. Test Samples shall be oven-dried to a constant weight at a temperature of 230° F, plus or minus 9°.

Chemical analysis shall be undertaken for Nitrate Nitrogen, Ammonium Nitrogen, Phosphorus, Potassium, Calcium, Magnesium, extractable Aluminum, Soluble Salts, and acidity (pH) and buffer (pH). A Conductance Meter shall be used to measure Soluble Salt levels in soils:water extracts.

Soil analysis tests shall show recommendations for soil additives to correct soils deficiencies as necessary, and for additives necessary to accomplish particular planting objectives noted.

All tests shall be performed in accordance with the current standards of the Association of Official Analytical Chemists.

11.2.2 Fertilizer

Submit four (4) certificates of analysis for each type of fertilizer used; submit one sample packet for planting fertilizer.

11.2.3 Seed

Submit a supplier's certificate that seed composition by grass species conforms to the Specification requirements.

11.2.4 Planting Mulch

Submit a one (1) cubic foot sample.

11.2.5 Antidesiccant

Submit manufacturer information.

11.2.6 Peat

Submit a one (1) cubic foot sample and supplier's certification of contents.

11.3 PLANTABLE BORROW MATERIALS

11.3.1 Loam

Loam shall be a "fine sandy loam" or a "sandy loam" determined by mechanical analysis (ASTM D-422) and based on the "USDA Classification System". It shall be of uniform composition, without admixture of subsoil. It shall be free of stones greater than one inch (1"), lumps, plants and their roots, debris and other extraneous matter as determined by the Engineer. It shall be obtained from naturally well-drained areas which have never been stripped before and have a history of satisfactory vegetative growth.

Loam shall have the following mechanical analysis:

Textural Class	% of Total Weight	Average %
Sand (0.05 - 2.0 mm dia. range)	45 - 75	60
Silt (0.002-0.05 mm dia. range)	15 - 35	25
Clay (less than 0.002 mm dia. range)	5 - 25	15

Loam shall have an acidity range of pH 5.6 to pH 6.5 and shall contain not less than 4% nor more than 8% organic matter, as certified by required tests.

The loam stripped and stockpiled on the site per Section 5.4.4 may be used provided that, after testing and addition of necessary additives, it meets the above specification. The Contractor shall provide additional loam as required to complete the required work.

All loam proposed for use shall be tested for conformance to the specifications.

Loam borrow shall be free of debris and other extraneous matter. It shall be uncontaminated by salt water, foreign matter and substances harmful to plant growth. The electrical conductivity (EC2) of a 1:2 soil-water suspension shall be equal to or less than 1.0 millimhos/cm. (Test minus sieve #10 material). Soils shall not have levels of Aluminum greater than 200 parts per million.

No loam borrow shall be delivered to the site until the review and approval of loam test results by the Engineer, but such approval shall not constitute final acceptance. The Engineer will reject any material delivered to the site which, after on-site, post-delivery testing, does not meet these specifications.

11.3.2 Compost

Compost shall consist of a fertile mixture of decomposed organic matter reasonably free of stumps, roots, stones, sticks, brush, litter or other non-decomposed matter. Material classified as Compost can only be obtained from the Town's Recycling and Transfer Station (RTS) facility.

11.4 SOIL ADDITIVES

11.4.1 General

Soil additives shall be used to counteract soil deficiencies as recommended by the soils analysis and as supplements for particular lawn and planting purposes as specified herein.

11.4.2 Sulphur

Sulphur for adjustment of loam pH shall be commercial or flour sulphur, unadulterated, and shall be delivered in containers with the name of the manufacturer, material, analysis and net weight appearing on each container.

11.4.3 Ground limestone

Ground limestone for adjustment of loam pH shall contain not less than eighty five percent (85%) of total carbonates and shall be ground to such fineness that forty percent (40%) will pass through 100 mesh sieve and ninety five (95%) will pass through a 20 mesh sieve. Contractor shall be aware of loam pH and the amount of lime needed to adjust pH to specification in accordance with testing lab recommendations. Ground limestone shall not be applied at a rate greater than two hundred pounds (200 lbs.)/one thousand (1,000) square feet incorporated into the soil, or fifty pounds (50 lbs.) of limestone/one thousand (1,000) square feet, surface application, per season.

11.4.4 Humus

Humus shall be natural humus. It shall be free from excessive amounts of zinc, low in wood content, free from hard lumps and in a shredded or granular form. According to the methods of testing of A.O.A.C., latest edition, the acidity range shall be approximately 5.6 pH to 6.5 pH and the organic matter shall be not less than 85%. The minimum water absorbing ability shall be 200% by weight on an oven-dry basis.

11.4.5 Peat Moss

Peat moss shall be composed of the partly decomposed stems and leaves of any of several species of sphagnum moss. It shall be free from wood, decomposed colloidal residue and other foreign matter. It shall have an acidity range of 3.5 pH to 5.5 pH as determined in accordance with the methods of testing of A.O.A.C., latest edition. Its water absorbing ability shall be a minimum of 1,100% by weight on an oven-dry basis.

11.4.6 Sand

Sand shall consist of hard, durable grains of quartz or other rock, clean and free from foreign matter or chemical contamination.

11.5 PLANTING

11.5.1 Plant Materials

The Contractor shall furnish all plants shown on the Drawings, as specified, and in quantities listed on the PLANT LIST. No substitutions will be permitted. All plants shall be nursery grown unless specifically authorized to be collected.

Plants shall be in accordance with the ASNS Standards of the American Association of Nurserymen. Botanical plant names shall be in accordance with plant designations included in Hortus III.

All plants shall be typical of their species or variety and shall have a normal habit of growth and be legibly tagged with the proper name. Only plant stock grown within hardiness Zones 1 through 6b, as established by the USDA Plant Hardiness Zone Map, latest edition, will be accepted. The Contractor's suppliers must certify in writing that the stock has actually been grown under Zone 6b or hardier conditions. Plants not so certified will not be accepted.

The root system of each plant shall be well provided with fibrous roots. All parts shall be moist and show active green cambium when cut. They shall be sound, healthy, and vigorous, well-branched and densely foliated when in leaf. They shall be free of disease, insect pests, eggs or larvae.

All plants must be moved with the root systems as solid units with balls of earth firmly wrapped with untreated eight (8) ounce burlap, firmly held in place by a stout cord or wire. Processed or manufactured plant balls will not be accepted

unless directed otherwise by the Engineer in writing. Plants prepared with plastic or other non-biodegradable wrappings will not be accepted. The diameter and depth of the balls of earth must be sufficient to encompass the fibrous and root feeding system necessary for the healthy development of the plant. No plant will be accepted when the ball of earth surrounding its roots has been badly cracked or broken preparatory to or during the process of planting or after the burlap, staves, ropes or platform required in connection with its transplanting have been removed. The plants and balls shall remain intact during all operations. All plants that cannot be planted at once must be heeled in by setting in the ground and covering the balls with soil and watering.

The height of the trees (measured from the crown of the roots to the tip of the top branch) shall be not less than the minimum size designated. Take caliper measurement for deciduous trees six inches (6") above ground level up to and including four inch (4") caliper size and twelve inches (12") above ground for larger sizes. Evergreen trees shall be of specified height with spread in proportion to height, as designated in the ASNS Standards, latest edition, and shall be well-branched to the ground. The trunk of each tree shall be a single trunk growing from a single un-mutilated crown of roots. No part of the trunk shall be conspicuously crooked as compared with normal trees of the same variety. The trunk shall be free from sunscald, frost cracks, or wounds resulting from abrasions, fire or other causes. No pruning wounds shall be present having a diameter exceeding two inches (2") and such wounds must show vigorous bark on all edges. Plants shall not be pruned prior to delivery.

Shrubs proposed on this project shall replace existing shrubs removed due to construction operations. The shrubs shall be of the same variety and of similar size as the original. Existing shrubs may be replanted in place of new shrubs, but only with approval of the engineer. Replanted shrubs shall be subject to the same guarantees as new plant materials.

Container grown stock shall have been grown in a container long enough for the root system to have developed sufficiently to hold its soil together, firm and whole. No plants shall be loose in the container.

Plants delivered by truck and plants requiring storage on site shall be properly wrapped and covered to prevent wind-drying and desiccation of branches, leaves or buds; plant balls shall be firmly bound, unbroken, reasonably moist to indicate watering prior to delivery and during storage and tree trunks shall be free from fresh scars and damage in handling. No trees with double-leaders or twin-heads will be acceptable without the written approval of the Engineer. The Contractor shall reject such plants at time of delivery by the nursery/supplier unless such plants

were selected by the Engineer as indicated by tags and seals. No plant material from cold storage will be accepted.

11.5.2 Planting Soil Mix

Planting soil mix shall be approved loam which has been pH adjusted according to particular planting applications and improved through the addition of organic matter as directed below. Planting loam shall conform to the following pH levels:

a. For ericaceous plants and broad-leaved evergreens requiring an acid soil, planting loam shall have a true pH of 4.5 to 5.5. If it has not, it shall be amended by the Contractor at his own expense to the proper pH range by mixing with sulphur as specified herein.

b. Planting loam for general planting of non-acid loving plants shall have a true pH value of 6.0 to 6.5. If it has not, it shall be amended by the Contractor at his own expense to the proper pH range by mixing with dolomitic limestone as specified herein.

c. The amount of either sulphur or limestone required to adjust the planting loam to the proper pH range (above) shall be approved by the Engineer on the basis of soil tests as specified herein. Loam shall have a starting pH of no lower than 4.2 for ericaceous plants and broad-leaved evergreens, and a starting pH of no lower than 5.0 for general planting of non-acid loving plants.

Planting soil mix shall consist of pH adjusted loam which has been thoroughly premixed with organic material in the proportions of one (1) part peat moss with five (5) parts of approved loam.

11.5.3 Planting Fertilizer and Mychorhiza Inocculant

Fertilizer shall be provided for each plant through the use of tightly compressed, long-lasting, slow-release fertilizer tablets which are designed and certified by the manufacturer to provide controlled release of fertilizer over a minimum two (2) year period. Each tablet shall consist of 21 grams of water soluble fertilizer with a minimum guaranteed analysis as follows:

Total Nitrogen	20	%
water soluble N	7	%
water insoluble N	13	%
Available Phosphoric Acid	10	%
Available Potash	5	%

Calcium	2.8	%
Magnesium (water insoluble)	0.5	%
Sulfur	2	%
Boron	0.02	%
Copper	0.05	%
Iron	0.5	%
Manganese	0.05	%
Zinc	0.05	%

Mycorrhizal fungal inoculant shall be 3 ounce packets of live spores. Each packet of inoculant shall contain the following:

Live spores of VA Endomycorrhizal fungi: minimum 1,000 spores of *Vesicular-Arbuscular* fungi including: *Entrephosora columbiana, Glomus etunicatum, Glomus clarum, and Glomus sp.*

Live spores of Ectomycorrhizal fungi: minimum 60 million spores of *Pisolithus tinctorius.*

Acrylamide copolymer gel as a water absorbent gel.

Yucca schidigera, a dry soluble yucca plant extract.

Soluble sea kelp extract, *Ascophylum nodosum*.

Humic acids, leonardite humates.

11.5.4 Staking, Guying and Anchoring Materials

Stakes for supporting trees shall be one and one-half inch nominal size (1.9" O.D.) galvanized schedule 40 steel pipe conforming to ASTM A120 requirements, length ten feet (10') or as detailed on Drawings. Paint stakes dark green or other color as directed by Engineer.

Hose to encase wires shall be new two-ply reinforced rubber garden hose not less than one-half inch (½") inside diameter. Color shall be black.

Guy wire shall be new pliable annealed galvanized soft steel wire of No. Ten (10) gauge size. Cable clamps shall be malleable compression sleeves of zinc plated copper. Sleeves shall be of double barrelled configuration for looped connection and sized to match the steel guy or anchor cable.

Tree Wrapping Material: shall be first quality, four inch (4") wide heavy waterproof crepe paper manufactured for this purpose. Tape for securing wrapping material shall be a durable, weatherproof tape of same color as wrapping material.

Antidesiccants: shall be emulsions or other materials which will provide a protective film over plant surfaces permeable enough to permit transpiration and specifically manufactured for that purpose. Manufacturer of antidesiccant shall be subject to the Engineer's approval and shall be used only after approval by the Engineer. Antidesiccant shall be delivered in containers of the manufacturer and shall be mixed according to the manufacturer's instructions.

11.5.5 Planting Mulch

Planting Mulch shall be pine bark mulch aged a minimum of six (6) months and not longer than two years. The mulch shall be dark brown in color, free of dirt, extraneous materials and pieces thicker than one-quarter inch (¼"). Mulch must be free of stringy material or chunks over three inches (3") in size and shall not contain, in the judgment of the Engineer, an excess of fine particles. Submit sample for the Engineer's approval.

11.5.6 Planting Operations

Furnishing and planting of any plant material includes the digging of the holes for individual plants and local excavation required for planting beds, provision of planting soil mix, furnishing the plants of specified size with roots in the specified manner, the labor of planting, fertilizing, mulching, guying and staking where called for, and maintenance.

The Contractor shall locate plant material sources and ensure that plants are shipped in timely fashion for installation.

Seasons for Planting:

Spring:	Deciduous materials - March 21 through May 1 Evergreen materials - April 15 through June 1
Fall:	Deciduous materials - October 1 through Dec. 1 Evergreen materials - August 15 through Oct. 15

Plant Material Inspection: At least one month prior to the expected planting date, the Contractor shall request that the Engineer provide a representative to select

and tag stock to be planted under this Section. The Contractor shall pay for the transportation, subsistence and overnight accommodations, if necessary, for the Engineer's representative during the period of time required to select and tag the plant material.

The Contractor shall be responsible to certify the availability of required plants in specified sizes from his sources of supply prior to requesting the Engineer to make plant source inspections. In the event that plants at the inspection location are found to be unavailable or of insufficient size, the Contractor shall be liable to reimburse the Owner for all costs of the Engineer's hourly services which are incurred during unproductive inspection trips.

Unless specifically designated otherwise, a representative of the Contractor shall accompany the Engineer on all plant material selection field trips.
All plants for the project shall be individually tagged for approval with the Engineer's seals, and no plants shall be accepted for delivery to the site without such seals.

Inspection and approval of plants at the source shall not impair the right of subsequent inspection and rejection upon delivery to the site, or during the progress of the work; if the Engineer finds that plants have declined noticeably due to handling abuse, lack of maintenance, or other causes. Cost of replacements, as required, shall be borne by the Contractor.

11.5.7 Planting Installation:

Locations for all plants and outlines for planting areas shall be staked on the ground by the Contractor for approval by the Engineer before any plant pits or plant beds are dug.

Plant pits shall be excavated with vertical sides. Holes for trees shall be at least two feet (2') greater in diameter than the ball and one foot (1') deeper than the ball.

Planting soil mix as specified shall be prepared and backfilled at individual tree pits as directed.

All plant roots and earth balls must be damp and thoroughly protected from sun and wind from the beginning of the digging operation, during transportation and on the ground until the final planting. The plants shall be planted in the center of the holes and at the same depth as they previously grew. After completion of planting installations, remove burlap, rope, wires, etc. from the upper quarter of

the root balls. Do not pull burlap or wires out from the sides or under root balls. Planting soil mix shall be backfilled in layers of not more than six inches (6") and each layer watered sufficiently to settle before the next layer is put in place. Enough planting soil mix shall be used to bring the surface to finished grade when settled. A saucer shall be formed around each plant at a depth of six inches (6") for trees.

Fertilizer tablets shall be added after the plant has been placed in the hole. Install fertilizer tablets at a depth of 6 to 8 inches equally spaced around the plant as it is being backfilled. Tablets shall be placed approximately one inch away from the plant roots or plant ball. Do not place tablets in the bottom of the hole.

Tablets shall be applied according to plant size. The application rates for fertilizer tablets shall be as follows:

Type of Plant	Fertilizer Rate
Deciduous Shade Trees	One tablet for each One half inch of caliper

All trees shall be inoculated with mycorrhizal fungi. Do not inoculate shrubs. Inoculant shall added after the trees have been placed in their holes. Open the specified number of 3 ounce packets for each tree and thoroughly mix the inoculant powder into the upper 10 inches of backfill mix.

Mycorrhizal fungal shall be added to the tree pits according to tree size. The application rates for 3 ounce mycorrhizal fungal packets shall be as follows:

Type of Plant	Packet Rate
Deciduous Trees	
2" - 2 1/2" caliper	Three
2 1/2" - 3" caliper	Three
3" - 3 1/2" caliper	Four

All plants shall be watered immediately following planting and thereafter shall be inspected frequently for watering needs and watered, as required, to provide adequate moisture in the planting pit.

All trees shall be firmly staked, guyed or anchored at the time of planting, unless otherwise approved or directed by the Engineer. Stakes shall be of even height,

plumb and neat in appearance and they shall not injure plant balls. Wires and cables used for tying the trunk to stakes or for guying shall be secured to the tree by passing through an approved hose to prevent chafing and injury to the trees.

Mulch material shall be placed over entire saucer areas of individual trees to a depth of two inches (2") after settlement, not later than one (1) week after planting. No mulch shall be applied prior to the first watering of plant materials.
Trees delivered to the site wrapped at the nursery for protection shall be unwrapped at the site for inspection of the trunk by the Contractor and Engineer. The trunks of all deciduous trees over one and one-half inches (1-1/2") in diameter shall be wrapped immediately after planting and inspection of the trees by the Engineer. Wrapping shall extend from the ground line to the height of the second branches or to the height directed. The specified wrapping shall be wound spirally, starting from the base and overlapping one and one half inches (1-1/2") in order to shed water. Wrapping shall be securely taped to prevent loosening and unraveling. If trees are planted in springtime, no additional tree wrapping is necessary. If trees are planted in the autumn, trees shall be wrapped and wrapping removed the following spring.

11.5.8 Transplanting Operations

11.5.8.1 The work of transplanting trees shall be supervised only by a certified Arborist. The Arborist shall be a professional Certified Arborist with a minimum five years experience, who has successfully completed a certification program equal to the Massachusetts Certified Arborist (MCA) program/examintion sponsored by the Massachusetts Arborists Association, Wellesley, MA 02181-7913; Tel (617) 431-1625. The work of transplanting plant material shall include, but shall not be limited to, the following:

a. Pruning plants prior to transplant.

b. Safe removal of plants from their existing locations.

c. Digging holes to receive transplanted plants.

d. Planting tree in new location.

e. Amendment of soils in new hole.

f. Plant material maintenance after transplant operations.

11.5.8.2 Submit a description of procedures, equipment and materials, and a schedule to be used to transplant the designated plants.

11.5.8.3 The specific plants to be transplanted are identified on the Contract Documents. The Contractor shall walk the site with the Owner's Representative, at the beginning of the Contract before construction begins, to verify the specific plants to be transplanted and to mark them with flagging. Contractor shall provide flagging tape. Plants shall be tagged on the north side of the trunks to ensure that the plant is transplanted with the same solar orientation.

11.5.8.4 Plant material shall be transplanted between March 21 and May 1 and October 30 and November 30. Plant material shall not be transplanted when root balls are in a frozen condition

11.5.8.5 The area beneath the plant to be transplanted shall be thoroughly soaked on day prior to digging. Contractor shall provide sufficient irrigation and watering of the soil beneath the tree to ensure that the soil to the full depth of the root ball is completely moist.

11.5.8.6 Contractor shall excavate the hole to receive the plants prior to removing the existing plants from the ground. All plant pits dug with a machine shall have the sides of the holes scraped with hand shovels to prevent glazing and compaction of the sides of the hole. Existing soil, new loam, and all soil additives shall be stockpiled in accessible location so that it will not be driven upon during the transplanting operation.

11.5.8.7 The bottom of the new pit shall be thoroughly moist prior to receiving the transplanted plant.

11.5.8.8 Apply antidessicant spray to all branches and foliage prior to digging plants. If on-site transport of the plants requires the plants to be tilted or placed on a truck or trailer, then branches shall be tied up with strong rope or twine starting at the top and working downward.

11.5.8.9 Tree Transplanting:

a. Plants shall be transplanted using a tree spade. Tree spade shall be capable of creating a root ball by encircling the tree trunk, hydraulically pressing or hammering four or more steel blades into the ground such that the blades sever all roots cleanly, lifting the tree and isolated root ball out of the ground without loss of soil from the root ball, maintaining the tree and root ball in either a vertical or tilted

position for an extended period of transport, transporting the plant and root ball to it's designated permanent location, and placing the tree and root ball into a pre-excavated hole.

b. Rootballs shall have a minimum diameter and depth in accordance with the requirements of the Tree and Shrub Transplanting Manual.

c. Special care shall be taken to center the tree trunk within the tree spade prior to digging.

d. Use levels to ensure that the tree spade frame is level to ensure that the plants are transplanted plumb. Use corner shoes or flat boards under the corners of the tree spade frame to keep the tree spade level on slight slopes or depressions.

e. Insertion of blades into the soil shall be smooth and unobstructed. Should soil density or rocks interfere with the insertion of the blades of the tree spade, abandon the use of the tree spade and hand dig and transplant plants as directed by the Owner's Representative.

f. Roots that extend between the apexes of the blades shall be cut cleanly immediately upon removing the rootball from the soil.

11.5.8.10 Planting:

a. Plants shall be moved carefully to the pits where they are to be planted. The plant and rootball shall remain intact during all transplanting operations.

b. Maintain proper alignment while lowering the soil ball into the new hole. When the plant is being placed in the pit, position it in the center of the pit, with trunk plumb and vertical and north mark of the flag on trunk facing north. Minor vertical alignment and adjustment after the tree spade has been lifted from the hole shall proceed carefully to avoid cracking or damage to the root ball and roots.

c. Lower plant into the pit and check level of top of the rootball to ensure that the root flare is set two inches above the level of the adjacent ground. If the top of the ball does not meet this requirement, remove the plant from the pit and adjust the depth of the pit by removing existing soil below, or adding additional planting mixture as required. Slightly moisten planting soil mixture after

resetting level.

d. After plants have been staked and guyed into place, hand excavate the top 12 inches of soil around the rootballs to the dimensions shown on the Contract Documents. Backfill with approved backfill mix.

11.5.8.11 Backfilling Holes and Protection:

a. Backfill rootball, install mycorrhizal fungal inoculant, install saucer, install fertilizer, place mulch, and water plants in accordance with the provisions of this Division 2 Section, TRANSPLANTING.

Install watering bags after the planting operations at the trees noted on the Contract Documents and as directed by the Owner's Representative.

b. When new pits are dug to receive transplanted plants, the Contractor shall provide protection barriers and signs to keep the general public away from the pits and earth stockpiles.

c. Holes left over from lifting out transplanted plants shall be immediately filled with left over soil stockpiled adjacent to the tree pits and approved loam. Disturbed areas shall be seeded or sodded as directed by the Owner's Representative. If in the opinion of the Owner's Representative the holes may be a hazard, then the holes shall be protected with barriers and signs to keep the general public away from the area.

11.5.8.12 Maintenance of transplanted material shall conform to the requirements of this Division 2 Section, TRANSPLANTING.

11.5.8.13 After Transplanting

a. Fertilizer shall be spread over the plant saucer or plant bed between the saucer and the edge of the rootball prior to the placement of planting mulch. Do not mulch until placement of the fertilizer has been verified by the Owner's Representative.

b. All plants shall be inoculated with mycorrhizal fungi. Inoculant shall be added after the plants have been placed in their holes. Open the specified number of 3 ounce packets for each plant and thoroughly

mix the inoculant powder into the upper 10 inches of backfill soil.

1. Mycorrhizal fungal inoculant shall be added to the plant pits according to plant size.

2. The application rates for 3 ounce mycorrhizal fungal packets shall be as follows:

Type of Plant	Packet Rate
Deciduous Trees:	One packet per caliper inch.
Evergreen Trees:	One packet per two-foot increment of height.

3. Submit the purchasing receipt showing the total quantity purchased for the project prior to installation. Submit empty packets of fungal spore inoculants to the Owner's Representative for verification of use. Owner's Representative will excavate tree pits to determine presence of mycorrhizal fungal inoculants.

c. All plants shall be watered immediately following planting as necessary to thoroughly moisten root ball and plant pit loam and thereafter shall be inspected frequently for watering needs and watered, as required, to provide adequate moisture in the planting pit. The Contractor shall inspect tree pits 24 hours after initial watering to confirm that they are draining properly. If surface water or excessively saturated plant pit soils exist, the Contractor shall immediately notify the Owner's Representative. The Owner's Representative will recommend remedial measures based upon site conditions.

d. Mulch material shall be placed over entire saucer areas of individual trees and shrubs and over the entire area of planting beds to a depth of 3 inches after settlement, not later than one week after planting. Do not apply mulch prior to the first watering of plant materials. Do not apply mulch prior to placement of surface applied fertilizer and verification of placement by the Owner's Representative.

e. The trunks of all deciduous trees over 1-1/2 inches in diameter shall be wrapped immediately after planting and inspection of the trees by

the Owner's Representative. Wrapping shall extend from the ground line to the height of the second branches or to the height directed. The specified wrapping shall be wound spirally, starting from the base and overlapping 1-1/2 inches in order to shed water. Wrapping shall be securely taped to prevent loosening and unraveling. If trees are planted in springtime, do not apply any tree wrapping. If deciduous trees are planted in the autumn, wrap the trees and then remove wrapping the following spring.

1. Trees delivered to the site wrapped for protection shall be unwrapped at the site for inspection of the trunk by the Contractor and Owner's Representative.

11.5.9 Post Planting Operations

Each plant shall be pruned in accordance with the workmanship requirements of "Pruning Standards" to preserve the natural character of the plant.

All dead wood or suckers and all broken or badly bruised branches shall be removed. Never cut a leader.

Antidesiccant shall be applied to all plants before digging at the nursery and/or as directed by the Engineer once the plants have been delivered to the site.

If planting is done after lawn preparation or installation, proper protection of lawn areas shall be provided and any damage resulting from planting operations shall be repaired immediately at no cost to the Owner.

In the event that rock or underground construction work or obstructions are encountered in any plant pit or bed excavation work to be done under this Contract, alternate locations may be selected by the Engineer.

11.5.10 Planting Maintenance

Ongoing maintenance of plant material shall begin immediately after installation and continue to the final inspection and formal, written acceptance by the Resident Engineer of the plant material and plant material installation. The maintenance period shall start upon written acceptance of the plant material and plant material installation and shall continue for ninety (90) days. Maintenance shall consist of keeping the plants in a healthy growing condition and shall include but is not limited to watering, weeding, cultivating, re-mulching, tightening and repairing of guys, removal of dead material, resetting plants to proper grades or upright

position, and maintaining the planting saucer.
Provide the following during the planting maintenance period:

a. Plants shall be inspected for watering needs at least twice each week and watered as necessary to promote plant growth and vitality.

b. Stakes shall be kept plumb and neat in appearance. Guys, wires and anchoring cables shall be tightened and repaired weekly.

c. Planting beds and individual plant pits shall be kept free of weeds, and mulch shall be replaced as required to maintain the specified layer of mulch. Beds and individual pits shall be neat in appearance and maintained to the designed layout.

d. Plants that die during the maintenance period shall be removed and replaced at once, unless designated otherwise by the Resident Engineer.

e. Spraying for both insect pests and diseases shall be included during the maintenance period as required and as directed.

During the maintenance period, any decline in the condition of plantings shall require the Contractor to take immediate action to identify potential problems and undertake corrective measures. If required, the Contractor shall engage professional arborists and/or horticulturalists to inspect plant materials and to identify problems and recommend corrective procedures.

11.5.11 Guarantee

The One Year Plant Guarantee Period will begin on the date that the Engineer performs a final inspection and issues a formal, written acceptance of plant material and plant material installation. All planting work shall have been completed, located and installed according to the plans and specifications, and all plants shall be in a living and healthy condition at the time of final inspection.

Termination of the Guarantee Period: The Engineer will inspect all plants at the end of the One Year Guarantee Period. The Guarantee Period will end on the date of this inspection provided the Contractor has complied with the work required under the Planting Maintenance Period. The Contractor shall also comply with the following requirements:

a. Replace dead, missing, or defective plants.

b. Complete remedial measures directed by the Resident Engineer to ensure plant survival.

c. Repair damage caused while making plant replacements.

d. Remove all wire, hoses, cables, guys and stakes from all trees which have been judged acceptable under guarantee provisions. Unless designated otherwise by the Government, all such materials used for temporary support of trees shall be removed from the site.

11.5.12 Measurement and Payment

Planting or transplanting trees and shrubs shall be measured in place after installation. Payment shall be made at the contract unit price per plant installed and shall include all labor, materials, and equipment necessary to install the tree or shrub complete and in place in conformance with the specifications stipulated in Subsections 11.5.1 through 11.5.10.

Planting mulch shall be measured in place after installation. Payment shall be made at the contract unit price per cubic yard installed and shall include all labor, materials, and equipment necessary to planting mulch to the depth specified, in conformance with the specifications stipulated in Subsections 11.5.5.

Payment Items

		Unit
11.5.5	Planting Mulch	Cubic Yard
11.5.11a	Tree Installed Complete in Place	Each
11.5.11b	Shrub Installed Complete in Place	Each
11.5.11c	Tree Removed and Replanted	Each
11.5.11d	Shrub Removed and Replanted	Each

11.6 LAWNS

11.6.1 Seed

Seed mixture for seeded lawns shall be fresh, clean, new crop seed. Grass shall be of the previous year's crop and in no case shall the weed seed content exceed 1% by weight. The seed shall be furnished and delivered in the proportion specified below in new, clean, sealed and properly labeled containers. All seed shall comply with State and Federal seed laws. Submit manufacturer's Certificates of Compliance. Seed which has become wet, moldy or otherwise damaged shall not be acceptable.

Seed Mixture Composition

Botanical Name/ Common Name	Proportion By Weight	Germination Minimum	Purity Minimum
(Festuca rubra) Creeping Red Fescue or Chewing's Fescue	60%	85%	95%
(Poa pratensis) Kentucky Bluegrass	25%	85%	90%
(Lolium perenne) Manhattan Perennial Rye	10%	90%	90%
(Agrostis alba) Red Top	5%	85%	92%

Seed may be mixed by an approved method on the site or may be mixed by a dealer. If the seed is mixed on the site, each variety shall be delivered in the original containers which shall bear the dealer's guaranteed analysis. If the seed is mixed by a dealer, the Contractor shall furnish the Engineer the dealer's guaranteed statement of the composition of the mixture.

11.6.2 Lawn Fertilizer

Commercial lawn fertilizers shall be products complying with Massachusetts and United States fertilizer laws. Deliver to the site in the original unopened containers which shall bear the manufacturer's certificate of compliance covering analysis which shall be furnished to the Engineer. At least 50 percent by weight of the nitrogen content of all fertilizers shall be derived from organic materials. Fertilizers shall contain not less than the percentages of weight of ingredients as follows or as recommended by the soil analysis:

	Nitrogen	Phosphorus	Potash
Starter Fert.	14 percent	28 percent	14 percent
Maintenance Fert.	10 percent	6 percent	4 percent

Superphosphate shall be composed of finely ground phosphate rock as commonly used for agricultural purposes containing not less than 18% available phosphoric acid.

11.6.3 Lawn Chemicals and Insecticides

Provide chemicals and insecticides as needed for fungus or pest control for lawns and planting work.

11.6.4 Water

The Contractor shall be responsible to furnish his own supply of water to the site at no extra cost. If possible, the Owner shall furnish the Contractor upon request with an adequate source and supply of water at no charge. However, if the Owner's water supply is not available or not functioning, the Contractor shall be held responsible to furnish adequate supplies at his own cost. All work injured or damaged due to the lack of water, or the use of too much water, shall be the Contractor's responsibility to correct. Water shall be free from impurities injurious to vegetation.

11.6.5 Fine Grading and Loaming

Contractor shall obtain Engineer's written approval of previously completed rough grading work prior to commencing loam placement work. Prior to spreading of loam, subgrades which are too compact to drain water and too compact based upon compaction tests shall be ripped with a claw twelve inches (12") deep, pulled by a bulldozer 2'-0" on center, both directions. Contractor shall then regrade surface.

Immediately prior to dumping and spreading the loam, the subgrade shall be cleaned of all stones greater than two inches (2") and all debris or rubbish. Such material shall be removed from the site.

Loam shall be placed and spread over approved areas to a depth sufficiently greater than six inches (6") so that after natural settlement and light rolling, a minimum six inch (6") compacted loam depth will have been provided and the completed work will conform to the lines, grades and elevations indicated. Supply additional loam, after testing and approval, as may be needed to give the specified depths and finished grades under the contract without additional cost to the Owner.

Disturbed areas outside the limit of lawn work shall be spread with a minimum of six inches (6") of loam to the finished grade.

No subsoil or loam shall be handled in any way if it is in a wet or frozen condition.

Sufficient grade stakes shall be set for checking the finished grades. Stakes must be set in the bottom of swales and at the top of slopes. Grades shall be established which are accurate to one-tenth of a foot (1/10') either way. Connect contours and spot elevations with an even slope.
After loam has been spread, it shall be carefully prepared by scarifying or harrowing and hand raking. Remove large stiff clods, lumps, brush, roots, stumps, litter and other foreign matter. Remove all stones over one inch (1") in diameter from the top three inches (3") of the loam bed. Loam shall also be free of smaller stones in excessive quantities as determined by the Engineer.

The whole surface shall then be compacted with a roller or other suitable means to achieve a maximum dry density of 88 to 90 percent for the placed loam in accordance with compaction standards of ASTM D1557 Method D. During the compaction process, all depressions caused by settlement or rolling shall be filled with additional loam and the surface shall be regraded and rolled until presenting a smooth and even finish corresponding to the required grades.

11.6.6 Incorporation of Additives

Soil additives shall be spread and thoroughly incorporated into the top four (4) inches of the loam layer by harrowing or other methods approved by the Engineer. The following soil additives shall be incorporated:

a. Ground limestone as required by soil analysis to achieve a pH of 6.0 to 6.5, but the maximum amount applied shall be one (1) pound per square yard.

b. Fertilizer at the rate of twenty (20) lbs. per one thousand (1,000) square feet, min. or more, as recommended by the soil analysis.

c. Superphosphate at the rate of twenty (20) lbs. per one thousand (1,000) square feet.

d. Humus or other soil amendments as required by soil analysis.

Following the incorporation of additives, the surface shall be re-compacted as required to meet the standards outlined herein.

11.6.7 Lawn Construction

Contractor shall obtain Engineer's written approval of fine grading and bed preparation before doing any sodding.

Limit of work line shall be as indicated on the Drawings. All areas disturbed outside the work limits shall be sodded.
The season for lawn work shall be from April 1 to June 1 and from August 15 to October 15. The actual lawn construction work shall be done, however, only during periods within this season which are normal for such work as determined by weather conditions and by accepted practice in this locality. At his option, and on his own responsibility, the Contractor may proceed under unseasonable conditions without additional compensation, but subject to Engineer's approval of time and methods.

Seed only when the bed is in a friable condition, not muddy or hard.

Application rate for seeding shall be five (5) pounds of specified seed mix per thousand square feet or 220 pounds per acre.

Seeding shall be done in two directions at right angles to each other. Sow the seed with approved seeding device at the specified seeding rate. No seeding shall be done in windy weather.

If covering and rolling is not properly accomplished by the seeding machine, the seed shall be lightly raked into the ground, after which the ground shall be rolled and thoroughly and evenly watered with a fine spray to penetrate the soil to a depth of at least two inches (2").

Erosion control mesh shall be installed according to manufacturer's specifications in all drainage swales and all slopes of one vertical foot to three horizontal, or steeper, immediately after such areas have been seeded. Secure mesh with pegs following installation.

11.6.8 Turf Maintenance

Maintenance period for turf shall begin immediately after installation and shall continue until the following conditions have been met:

a. All areas shall have a close stand of grass with no weeds present.

b. All areas shall have no bare spots greater than 3 inches in diameter over greater than five percent of the overall seeded area.

c. At least 90 percent of the grass established shall be permanent grass species.

Provide the following during the turf maintenance period:

a. Eradicate weeds, water, overseed and perform any other operation necessary to promote the growth of grass.

b. Replant areas void of turf that are larger than 3 inches in diameter.

c. Mowing of the lawn at least three times after installation. Begin mowing when grass is four inches high. Mow to a 2-½ inch height. After the third mowing the client will take over mowing responsibilities. <u>This does not relieve the Contractor of his other maintenance obligations as defined herein.</u>

d. Fertilizing of lawn areas as required herein.

The Contractor is not responsible for theft or damage to lawns by non-contractor vehicles or vandalism once lawns are installed and approved.

11.6.9 Guarantee Period

The One Year Turf Guarantee Period will begin on the date that the Engineer performs a final inspection and issues a formal, written acceptance of all turf. All turf work shall have been completed, located and installed according to the plans and specifications, and all turf shall be in a living and healthy condition at the time of final inspection.

Termination of the Turf Maintenance and Guarantee Period: The Engineer will inspect all turf at the end of the One Year Guarantee Period. The Guarantee Period will end on the date of this inspection provided the Contractor has complied with the work required under the Turf Maintenance Period. The Contractor shall also comply with the following requirements:

a. Replace dead, missing, or defective turf.

b. Complete remedial measures directed by the Engineer to ensure turf survival.

c. Repair damage caused while making turf replacements.

11.6.10 Measurement and Payment

The quantity of previously stripped and stockpiled loam topsoil shall be measured in place after compaction to the specified depth. Payment shall be made at the contract unit price per cubic yard complete in place and shall include all labor, materials and equipment necessary to separate existing vegetation from the existing loam, test the existing loam topsoil, and spread and compact the loam topsoil in conformance with the specifications stipulated in Subsections 11.3.1, 11.4, 11.6.5, and 11.6.6.

Compost from the Town's Recycling and Transfer Station (RTS) facility shall be measured in place after compaction to the specified depth. Payment shall be made at the contract unit price per cubic yard complete in place and shall include all labor, materials and equipment necessary to loam the compost at the RTS facility, deliver it to the job site and spread and compact it in conformance with the specifications stipulated in 11.3.2, 11.4, 11.6.5, and 11.6.6.

Loam shall be measured in place after compaction to the specified depth. Payment shall be made at the contract unit price per cubic yard complete in place and shall include all labor, materials and equipment necessary to spread and compact the loam in conformance with the specifications stipulated in Subsections 11.3.1, 11.4, 11.6.5, and 11.6.6.

Seeding shall be measure in place after a uniform stand of grass meeting the requirements of the specification and satisfactory to the Engineer has appeared. Payment shall be made at the contract unit price per square yard of area approved as acceptable by the Engineer and shall include all labor, materials and equipment necessary to produce an acceptable lawn in conformance with Subsections 11.6.1 through 11.6.4 and Subsections 11.6.7 through 11.6.9.

Payment Items

		Unit
11.6.10a	On-site Loam Rehandled, Spread and Compacted	Cubic Yard
11.6.10b	Compost Handled, Spread and Compacted	Cubic Yard
11.6.10c	Loam Spread and Compacted	Cubic Yard
11.6.10d	Seeding	Square Yard

11.7 CLEAN UP

Absolutely no debris may be left on the site. Excavated material shall be removed as directed. Repair any damage to site or structures to restore them to their original condition, as directed by the Engineer, at no cost to the Owner.

SECTION 12 NEW LIGHTING/ELECTRICAL/TRAFFIC SIGNALS

12.1 GENERAL

12.1.1 Description of Work

The work in this Section, without limiting the generality thereof, consists of furnishing all labor, materials, transportation, equipment, accessories, appurtenances, and services necessary and/or incidental to the proper furnishing and installation of a complete traffic signal system. This shall include all works shown on the drawings, described in the Specifications, or as reasonably inferred from either, in the opinion of the Engineer and/or the Town of Needham, as being required to provide a complete, operational traffic signal system as described herein and as shown on the plans. The intersection traffic signals shall operate as a fully-actuated traffic control system.

The work shall include the furnishing and installation of part or all of the following items: the controller, cabinet and foundation with concrete pad; mast arm poles, anchor bolts and foundations; signal posts and foundations; signal heads; backplates; pedestrian signals and push buttons; preemption system: vehicle loop detectors; all cable and wiring; equipment grounding and bonding; loop detector amplifiers; service connection; and all other equipment, materials and incidental costs necessary to provide a complete, fully operational traffic control signal system as specific herein and as shown on the plans.

The Contractor shall field adjust the signal timing at the direction of the Engineer. The Engineer shall test the emergency pre-emption system to verify proper installation. The Contractor shall adjust optical pre-emption detectors as necessary.

12.1.2 Specification Requirements

All traffic control work shall conform to the following specifications:

Reference to “Standard Specifications” shall refer to the Massachusetts Department of Public Works Standard Specifications for Highways and Bridges, 1988 and latest supplements.

Manual on Uniform Traffic Control Devices (MUTCD) - latest edition, U.S. Department of Transportation, Federal Highway Administration.

“Standard Drawings” shall refer to the Massachusetts Department of Public Work

Construction Standards, 1996, the Standard Drawings for Signs and Supports, 1990, and Standard Drawings for Traffic Signals and Highway Lighting, 1996, and their latest supplements.

All the electrical components of the traffic control work shall conform to the governing Codes, Regulations and Ordinances. It shall be the responsibility of the Contractor to familiarize himself with all governing Codes, Regulations and Ordinances and report any non-compliance of the Plans and Specifications to the Engineer, prior to entering into a contract. All the above requirements shall take precedence over the Plans and Specifications. These requirements are minimum criteria and no reductions permitted by Code will be allowed, without written permission of the Engineer.

For all electrical components, workmanship, methods and materials shall meet the highest standards of the trade and, in general, shall conform to the following standards of the following associations:

1. National Electrical Code (NEC) & Massachusetts Amendments
2. National Board of Fire Underwriters (NBFU)
3. National Electrical Manufacturer's Association (NEMA)
4. Occupational Safety and Health Act (OSHA)
5. Standards of Underwriters' Laboratories (U.L.)
6. American National Standards Institute (ANSI)
7. Institute of Electrical and Electronic Engineers (IEEE)
8. Town of Needham Regulations and Ordinances

12.1.3 Materials

Materials shall be the best of their respective kinds and in full accord with the most modern electrical construction. All materials shall be new. All materials necessary to make the installation complete in every detail shall be furnished and installed under this Contract, whether or not specifically shown on the Drawings or specified herein. It is the intent of the Specifications that one manufacturer be selected, not a combination, for any particular classification of materials.

12.1.4 Submittals

1. A list of major items required at the intersection is included on the Plans.

2. Within 30 days following execution of the contract, the Contractor shall submit shop drawings for signal supports, a list of equipment, and manufacturer's equipment specifications he proposes to install to the Engineer in accordance with the relevant provisions of Section 815.20.

3 No work shall be commenced by the Contractor until approval of the shop drawings and manufacturer's data has been received in writing from the Engineer.

4 Approval of these drawings will be general in character and shall not relieve the Contractor from the responsibility of, or the necessity of, furnishing materials and workmanship required by the plans and these specifications. The Contractor shall deliver to the Engineer a certificate of compliance by the manufacturer for all materials purchased from the manufacturer.

12.2 PRODUCTS

12.2.1 Conduit

The Electrical Conduit shall be Rigid, Nonmetallic (Type NM) and the material shall comply with the MHD Standard specification subsection M5.07.0. The Couplings, elbow, bends, adapter, reducers, increasers and bell ends shall all conform to the above specification.

The conduit work in its entirety shall carried out in accordance wth the requirements of MHD Specification section 801.

12.2.2 Pull Boxes

The material and installation for the pull and junction boxes (SD2.03) 000.shall be in accordance with MHD Specification section 801.61.

12.2.3 Controller Unit and Cabinet

The controller, malfunction management unit, detector amplifiers, bus interface units and all other ancillary traffic signal control components included in the traffic control cabinet shall comply with the National Electrical Manufacturers Association (NEMA) Standard No. TS 2, Traffic Controller Assemblies.

The controller and cabinet assembly shall be supplied in a 8-phase TS 2 Type 1

configuration as required in the list of major traffic signal items included on the plans for this location. The controller shall be an EAGLE EPAC 8 Phase, Model 300 Advanced, or equivalent.

The cabinet shall be made of aluminum.

Controller cabinet foundation shall not obstruct a sidewalk or crosswalk so that passage by physically-challenged persons is impaired.
TS 2 Type 1 Controller and Cabinet Assemblies: Controller shall conform to Section 3, Controller Units of NEMA No. TS 2, Traffic Controller Assemblies. Controller shall utilize an input/output interface conforming to Section 3.3.1 of the NEMA TS 2 Standard for all input/output functions with the backpanel terminals and facilities, the malfunction management unit, detector rack assemblies and auxiliary devices.

The TS 2 Type 1 cabinet shall meet the requirements of configuration 3 as defined in Table 5-2, "Type 1 Configurations" of the NEMA TS 2 Standard. The cabinet shall also be wired with a normally closed switch connected to a user defined input to the controller for remote monitoring of the control cabinet's door open status.

12.2.4 Bus Interface Units

The Bus Interface Unit (BIU) shall comply with Section 8 of the NEMA TS 2 Standard. The BIU shall be fully interchangeable with any other manufacturer's unit and interchangeable in a NEMA TS 2 Type 1 cabinet assembly.

The BIU shall perform the interface function between port 1 at the controller unit, the malfunction management unit, loop detector rack assembly, and the backpanel terminal and facilities.

As a minimum, two LED indicators shall be provided on the BIU front panel. One indicator shall serve a dual use; as a power on indication and as a diagnostic indicator for proper operation of the device. The second indicator shall serve as a transmit indicator illuminating each time data is transmitted.

12.2.5 TS 2 Cabinet Power Supply

A separate power supply shall be supplied and installed in the TS 2 cabinet. The unit shall be AC line powered and provide regulated DC power, unregulated AC power, a line frequency reference for the rack mounted loop amplifiers, bus interface units, load switches and other auxiliary cabinet equipment as required. As a minimum, the power supply shall meet all requirements of Section 5.3.5 of the NEMA TS 2 Standard.

The power supply shall be either shelf-mounted or wall-mounted utilizing key hole slots for ease of replacement or installed as part of the rack assembly.

The unit shall contain four LED indicators on the front panel to indicate the four outputs; +12 VDC ± 1 VDC @ 2.0 amps, + 24 VDC ± 2 VDC @ 2.0 amps, 12 VAC @ 250 milliamps, and 60 Hz line frequency reference. A test point terminal shall also be located on the units front panel for + 24 VDC and logic ground testing.

12.2.6 Malfunction Management Unit

The malfunction management unit (MMU) shall comply with Section 4 of the NEMA TS 2 standard. The MMU shall be capable of operating as either a Type 16 with 16 channels (8 vehicle, 4 pedestrian, 4 overlap) or a Type 12 with 12 channels (8 vehicle, 4 overlap). The MMU's supplied shall be configured to operate as Type 16 units.

The MMU's in either the Type 16 or Type 12 configuration shall be capable of operating in a NEMA TS 2 Type 1 cabinet or a NEMA TS 1 cabinet without loss of functionality.

12.2.7 Loop Detector Amplifier Rack Assembly

The loop amplifiers supplied shall be a Type C rack type, two-channel units with delay and extension timing internal to each unit's channel conforming to Section 6.5 of the NEMA TS 2 standards.

The detector shall fit in a standard card rack conforming to Section 6.5 of the NEMA TS 2 Standard. The detector rack assembly shall be a Type 2 configuration conforming to Section 5.9 of the NEMA TS 2 Standard. The two-channel card rack loop amplifier unit shall occupy one of the rack slots.
The detector unit shall be capable of operating in a voltage range from 10.8 to 28.8 VDC. The unit shall operate from the cabinet's external power supply at 12 VDC.

Each amplifier channel shall be labeled with the detector number. The detector lead-in cables shall be labeled with the street name, phase, detector number and terminal numbers, both in the controller unit and in the pull box containing the detector lead-in splice. This labeling and attachment shall be of durable materials such as brass or plastic, attached by wire or plastic ties. Adhesive attachment of the label shall not be acceptable.

The Type 8DW cabinet shall be supplied with a minimum of four, two-channel card rack loop amplifiers. Unless otherwise required by the plan's detector chart,

phase call assignments of each amplifier channel shall be wired to one of the traffic controller's vehicle phase inputs; one for each of the eight phases for an 8DW cabinet. Additional amplifiers shall be supplied if so required by the Major Items list on the plans.

12.2.8 Emergency Vehicle Pre-emption

When optical energy impulses are received at the intersection, control of the signals shall transfer to the controller's internal pre-emption logic. This shall cause the signal controller to show a selected display identical to one of the color interval displays normally available as specified, which will assist the vehicle through the intersection without cross street conflict. A mast-arm mounted confirmation beacon will confirm the operation for the approaching emergency vehicle. After the vehicle has passed through the intersection, control of the signals shall then return to normal operation, which shall restore the appropriate timings that were in effect prior to pre-emption.

The Contractor is required to supply material and labor required or shown for the complete installation of optical pre-emption equipment at this project. Intersection pre-emption equipment required includes optical detectors, cable, interfacing equipment to the controller, making electrical connections and all required incidentals.

The following are the equipment model requirements of the optical emergency vehicle pre-emption system:

1. The optical emergency vehicle detector shall be the 3M Opticom – Model 711.

2. The optical emergency vehicle emitter shall be the 3M Opticom – Model 782H Emitter. The optical emergency vehicle emitter priority control system shall be the 3M Opticom – Model 754 Phase Selector.

3. The optical emergency vehicle switch control module shall be the 3M Opticom – Model 793S Switch Control Module.

The following are the operational requirements of the optical emergency vehicle pre-emption system:

1. Emergency Vehicle Design Speed for pre-emption controlled approaches shall be 40 MPH.

2. Operating sequence as specified shall be initiated when the optical detector received optical energy of the required repetition rate from an emitter.

3. Detector shall transform the optical energy signals into electrical signals and transmit the electrical signals to the controller for processing.

4. Controller shall not respond to optical energy signals from another authorized vehicle.

5. The optical detector cable shall meet the specifications of the system manufacturer.

The Contractor shall arrange for a trained representative of the manufacturer of the optical energy pre-emption equipment to perform the following field supervision and turn-on services:

The representative shall select the proper quantity and place and method of installing all components to comply with the operational requirements shown in the pre-emption schedule included in these special provisions.

The representative shall instruct the Contractor and owner personnel in the procedures of installation.

The representative shall be available to assist, supervise and check all wiring to insure proper operation.

The representative shall perform a final check out to include initial adjustment of range and timing to acceptable standards.

The representative shall initiate documentation for as-built drawings.

The representative shall demonstrate the system and instruct the drivers of fire fighting vehicles in the operation of the system.

The representative shall instruct maintenance personnel in routine maintenance and minor troubleshooting of the system.

Any operation problems occurring within the next 30 days shall be corrected by the Contractor or by a Field Service representative if the Contractor cannot do so.

The cost of these field supervision and turn-on services shall be included in the Lump Sum Bid Price and no additional payment shall be made therefore.

The Contractor shall install the equipment consistent with the pre-emption equipment and the manufacturer's recommended installation procedures and

electrical diagrams in a neat and workmanlike manner.

The pre-emption equipment manufacturer shall be responsible for operational check-outs of the specified pre-emption functions prior to final acceptance and approval by the Engineer.

Operating check-outs include the following:

- Verifying that the priority system timing and range are properly set.
- Pre-emption equipment warranties are put into effect.

12.2.9 Testing of Grounding System

The Contractor shall perform testing of the equipment grounding system in the presence of the Engineer in accordance with the Standard Specifications.

12.2.10 Vehicle Loop Detectors

Wire loop detectors shall be installed in the roadway for vehicle detection before placement of the pavement overlay.

Each channel amplifier shall be labeled with the detector number. The detector lead-in cables shall be labeled, with the street name, phase, detector number and terminal numbers both in the controller unit and in the pull box containing the detector lead-in splice. This labeling and attachment shall be of durable materials such as brass or plastic, attached by wire or plastic ties. Adhesive attachment of the label shall not be acceptable.

Loop wire shall be encased in a protected plastic tubing of PVC or polyethylene plastic, IMSA 51-5, 1/4-inch outside diameter, and the wire may have cross-linked polyethylene insulation or it may have THHN/THWN insulation.

The heat source for soldering shall be electrical, not exceeding 30W capacity.

In the pull box nearest the roadway loop sensor, each lead and lead-in conductor shall be stripped back and spliced, using a pressure type wire connector applied with a crimping tool. Multiple loop sensors shall be identified as detailed on the plans.

Splicing insulator shall be an approved re-enterable rigid body splice kit with a non-hardening sealing compound compatible with the wire insulation. (Klick-it buried wire closure kit manufactured by Communication Technology, Inc., or approved equivalent).
Splice and Connection: Splicing and connection shall be made in the pull box

nearest the roadway loop sensor but not exceeding four loops per pull box. All loops included in a detector group as shown on the plans shall be spliced in a single pull box. Each lead and lead-in connector shall be stripped back and spliced using a pressure type wire connector applied with a crimping tool. Multiple loop sensors shall be identified as detailed on the plans.

Lead-in splicing shall be staggered to prevent contact with each other. Each crimped splice shall be soldered and insulated, and the insulation material shall be heat-shrinked polyolefin. The shielded lead-in cable outer jacket and shield shall be stripped back sufficiently to ensure that the shield cannot come into contact with the spliced conductors. The insulated, spliced conductors, shield and jacket shall be inserted in the bottom-half of the re-enterable splice kit filled with insulating compound, then screw on the top half of the kit until the compound is extruded. Strictly follow the instructions of the manufacturer when installing the re-enterable splice kit.

NOTE: The above splice shall be done on the day of the loop wire installation to prevent the entrance of any moisture into the plastic tubing. Splicing can not be delayed until another day unless both tube ends are sealed immediately in a totally dry and watertight manner.

The lead-in conductors shall be connected to the appropriate terminals in the controller cabinet, by using crimped and soldered terminal ends. The heat source for soldering shall be electrical, not exceeding 30W capacity.

`Testing of Loops: The test procedure shall be performed in the presence of the Engineer before and after the loop sensor is sealed in the pavement as stipulated in MHD Specification subsection 815.66. The cost of equipment, labor, and materials to perform such testing and similar re-testing following repairs, replacement, or adjustment of any detector within the project area shall be included in the price bid for the traffic control signal items.

The meter used for these tests shall be checked for calibration each day of use by using a resistor block of ±5% resistors simulating loads of 1 megohm, 20 megohm and 100 megohms. The observed meter reading shall be ±10% of the nominal resistor load.

12.2.11 Mast Arm Poles and Foundations

Mast arm poles and foundations shall be fabricated and constructed in conformance with the MHD Standard Drawings.

All mast arm poles shall be galvanized steel monolevers with shoe bases.

Acceptance of Type II mast arm poles shall be contingent upon review and approval of shop drawings submitted by the Contractor. Longhand designed calculations shall be submitted by the Contractor with the shop drawings for all Type II mast arm poles.

.

For all mast arm pole foundations included in this Contract, the standard mast arm pole foundation (SD3-040) shall be modified to a concrete cored foundation as shown on the Standard Drawings for 35-foot Type II Mast Arm Cored Pier Foundations included in the Plans.

The lump sum prices bid should assume the dimensions shown on the foundations chart for wet sandy soil. If the actual soil condition requires foundation dimensions for dry, sandy soil, clayey or alluvial soil, additional payment or credit will be made under MHD Specification section 815.981.

Where soil conditions are such that, in the opinion of the Engineer, the typical foundation design is not suitable, the Engineer will provide a modified design for the foundation.

Mast arm foundations shall not obstruct a sidewalk or crosswalk so that passage by physically-challenged persons is impaired.

12.2.12 Signal Heads

Signal heads mounted on proposed mast arms shall be rigidly attached to the mast arms, with the bottom of all signals at the same height. Proposed signal heads to be mounted on existing mastarms shall be attached in the same manner (free-swinging or rigid)) as the other signal on that mast arm. Five-inch black colored backplates shall be provided on all signal heads as noted on the plans.

12.2.13 LED Traffic Signal Modules

All vehicular traffic signals (balls and arrows) shall be of the light emitting diode (LED) type conforming to MHD and ITE standards.

Each signal indicator in each signal head shall be installed with an LED signal module fastened securely into the signal housing door. The module shall be connected to the terminal block or wires by means of simple connectors.

Materials Specification for LED Signal Modules.

The LED signal module shall conform to "The Proposed Interim Purchase Specification for Light Emitting Diode (LED) Vehicle Traffic Signals", Publication ST-021, 1995, Institute of Transportation Engineers (ITE), 525 School St., SW,

Suite 410, Washington, DC 20024-2797, Telephone: (202) 554-8050, FAX: (202) 863-5486.

An independent laboratory shall certify that the LED signal module complies with Section 6 Quality Assurance of the above stated ITE Publication ST-021.

Red, Yellow, and Green LED Vehicle Signal Module

LED signal modules must be type tested and approved by the Department according to the requirements of Subsection 815.21.

General: On the backside of the LED signal module there shall be a permanently marked "up" arrow to aid in the proper orientation of the module during installation. The manufacturer's name, trademark, serial number and other necessary identification shall be permanently marked on the backside of the LED signal module.

Physical and Mechanical Requirements: LED signal modules shall fit without modifications into existing traffic signal housings conforming to "Vehicle Traffic Control Signal Heads" (VTCSH) published in the Equipment and Materials Standards of the Institute of Transportation Engineers. The LED signal module shall be a signal, self-contained device, not requiring on-site assembly for installation. The LED signal assembly construction shall conform to the applicable ASTM specifications for the materials used to fabricate the module.

Each LED signal module shall comprise a smooth surfaced Red, Yellow, or Green UV stabilized polycarbonate outer shell, multiple LED light sources, a power supply and a polycarbonate back cover assembled in a gasketted or silicon sealed unit.

Optical and Light Output Requirement: The minimum luminous intensity values and light output shall be maintained within the rated input voltage of 117 Volts AC. LED signal modules shall not be allowed to fall short of the minimum intensity values at any of the 44 measuring points of the standard when lamp is turned on cold for measurements and after a 30 minute warm-up time period at 100% duty cycle.

Electrical: The maximum wattage for 12 inch shall be 20 Watts, 10 Watts for the 12 inch arrow, and 10 Watts for the 8 inch ball.

The LED sources shall not be powered above 70% of the manufacturer's specified rated load. This shall be clearly shown in layman's terms through calculations, schematics, catalogue cuts, etc.

The LED sources shall be made of A1InGaP type shown clearly in a catalogue cut or similar literature.

Warranty: The LED signal module will be replaced or repaired by the manufacturer if it exhibits a failure due to workmanship or material defects within the first 60 months of field operation.

The LED signal module will be replaced or repaired by the manufacturer if it exhibits either a greater than 40 percent light output degradation or a fall below the minimum intensity levels within the first 36 months of field operation.

12.2.14 Pedestrian Heads

The Pedestrian Heads shall conform to specification in MHD Standard Specification 1995, Metric Edition) section 815.16.

As per the standard, the "pedestrian signal indications shall be rectangular in shape and shall consists of symbolized messages. These symbolized messages consist of a walking person illuminated in Lunar White to symbolized WALK, and an upraised hand illuminated in Portland Orange to symbolized DON'T WALK. The symbols are the "international symbols" as set forth in the "Standard Highway Signs" published by the United States Department of Transportation, latest edition. Each indication shall be independently illuminated and emit single color." The two symbolized messages shall be side by side within a single rectangular housing unit and shall be installed as per manufacturer's recommendations. The pedestrian head unit shall be equipped with phototransistor for automatic dimming, with 30 sec delay on dimming to prevent interference from headlights and shadows. The dimming feature should be provided on both hand and man displays.

The Contractor shall provide LED one section 12-inch symbolic pedestrian signals manufactured by Precision Solar for all proposed pedestrian signals.

12.2.15 Pedestrian Push Buttons

Pedestrian push button controls shall be raised from or flush with their housings and shall be a minimum of 2 inches in the smallest dimension. The force required to activate the controls shall be no greater than 5 pounds.

Pedestrian push buttons shall be located as close as practicable to the sidewalk curb ramp serving the controlled crossing and shall permit operation from a clear ground space. If two crosswalks, oriented in different directions, end at or near the same location, the positioning of pedestrian pusbuttons and/or legends on the pedestrian push button signs should clearly indicate which crosswalk signal is actuated by each pedestrian push button.

A maximum mounting height of 42 inches above the finish sidewalk grade shall be used for pedestrian push buttons.

12.2.16 Posts and Bases

Signal posts and bases shall be aluminum shafts with cast aluminum transformer bases.

Signal base foundations shall not obstruct a sidewalk or crosswalk so that passage by a physically challenged person is impaired.

12.2.17 Equipment Finish and Color

All traffic signal equipment including but not limited to signal posts, bases, signal heads, visors (outside), doors, mast arms, pushbutton saddles, controller cabinets, service meter socket boxes, optical preemption detectors, hardware, and rigid mounting brackets for signals and signs shall be the color Matte Black which shall match color number 27038 of the Federal Standard 595A "colors used in government procurement." The inside of visors shall be flat black in accordance with Federal color number 37038. The Contractor shall submit to the Engineer, Design Engineer, and Town of Needham for approval, paint chips and sample finishes on aluminum and steel of the intended color prior to any work being done under this heading.

Signal heads, doors, visors, mounting brackets, and hardware supplied direct from the manufacturer in the color stipulated above may be acceptable provided it meets or exceeds the finish process for the material indicated below.

1. Steel Equipment

Galvanizing

All bolts, screws, nuts, rods and washers shall be galvanized in accordance with AASHTO M232 and the Standard Specifications. The hardened machine screws may be electroplate galvanized. Stainless steel studs, bolts, screws, nuts, straps and washers shall not be galvanized. Galvanized hardware need not be painted; however, the ends of bolts, nuts, and washers shall be painted in the field according to section "Touch-up and Repairs." Immediately prior to galvanizing, the steel shall be immersed in a bath of zinc ammonium chloride. The dry kettle galvanizing process shall be used.

All steel components, other than above, shall be galvanized after fabrication in accordance with AASHTO M111. The galvanizing bath shall contain nickel

(0.05% to 0.09% by weight) in accordance with subsection 960.61 of the Standard Specifications.

Galvanized members requiring shop assembly shall be welded and drilled prior to galvanizing

Coating Over Galvanized Steel

Prior to painting, the applicator shall ensure that all components are smooth and without sharp protrusions that would present an injury hazard to pedestrians. Also, the fabricator shall ensure that all welds shall be cleaned thoroughly in accordance with good practice and according to AWD D 1.5 and ASTM Al 23-89a and shall have a suitable surface to accept the galvanizing.

In preparation for the two coat painting system, the surface shall be blast cleaned in accordance with the requirements of SSPC SP7 "Brush-Off Blast Cleaning" or other method producing equivalent results and uniform profile, to achieve a 1.0 to 1.5 mils anchor profile as indicated be a Keane Tator Profile Comparator or similar device. The creation of the anchor profile shall be performed prior to the formation of "white rust" on the galvanized surface. Following blast cleaning, the zinc coating thickness shall be measured to verify that the coating thickness is in accordance with AASHTO M111.

A two coat painting system shall be applied by the Galvanizer in his own facility within twelve hours of galvanizing the steel components.

The prime coat material shall be a polyamide epoxy applied to minimum dry film thickness of 2.0 to 4.0 mils (0.002-0.004 in.) and force cured as given below for the finish coat.

The finish coat material shall be a two component, catalyzed aliphatic urethane applied by airless spray to a minimum dry film thickness of 4.0 mils.

The color shall be “Matte Black”. The fabricator shall submit to the Engineer for approval, paint chips of the intended color prior to any work being done under this heading.

All finish coat material shall be applied under conditions within the following tolerances:

A. Air Temperature 10° C min., 32° C max.
B. Surface Temperature 10° C min., 38° C max.
C. Surface temperature must be at least 3° C above the dew point.

The finish coat shall be cured in a booth capable of maintaining 66 ° C for 2-4 hours.

Touch-up and Repairs

Should any damage occur to the galvanized coating during shipping or handling at the job site, the Contractor shall repair and touch-up any damaged areas to the satisfaction of the Engineer and the following:

Touch-up of galvanizing before the finish coat is applied shall be accomplished by applying a galvanizing repair paint in accordance with Section M7.04.11. The dry film thickness of the applied repair paint shall not be less than 4.0 mils. Applications shall be in accordance with the manufacturer's instructions.

Field touch-up procedures shall conform to the recommendations of the galvanizer. Touch-up of the finish coat shall be by applying a coating of a two-part urethane, as supplied by the Galvanizer, to achieve a dry film thickness of at least 4.0 mils. Prior to the application of the paint, remove all damaged coatings down to a solidly adhered coating and apply galvanizing repair paint as primer. Allow the primer to dry for at least 4 hours prior to top coating.

The Contractor shall also use the touch-up paint material and procedures to paint the galvanized hardware used in field erection that has not been finish coated previously.

12.2.18 Fine Tuning, Adjustment and Testing Period

After the Contractor has finished installing the controllers and all other associated signal equipment and after the Contractor has set the signal equipment to operate as specified in the contract documents, the fine tuning, adjusting and testing period shall begin. During this period, the Contractor, under the direction of the Engineer will make necessary adjustments and tests to ensure safe and efficient operation of the equipment. This period shall not last for more than 30 days. No request for final acceptance will be considered until successful completion of testing period.

12.2.19 Guarantee After Final Acceptance

The Contractor shall troubleshoot, repair and/or replace any equipment installed in conjunction with this contract at his own expense if found to be defective in workmanship, material or manner of functioning within a period of six (6) months from the date of final acceptance of this contract.

12.2.20 Measurement and Payment

All work constituting of a fully operational traffic signal installation under the contract shall be measured as one single contract item and shall be compensated as a lump sum. The lump sum item shall include but not limited to the furnishing and installation of part or all of the following items: the controller, cabinet and foundation with concrete pad; mast arm poles, anchor bolts and foundations; signal posts and foundations; signal heads; signs; backplates; pedestrian signals and push buttons; vehicle loop detectors; all cable and wiring; ground rods, equipment grounding and bonding; loop detector amplifiers; service connection; 2 spare BIU's and all other equipment, materials and incidental costs necessary to provide a complete, fully operational traffic control signal system as specific herein and as shown on the plans.

Measurement and payment for electrical conduit shall be at the contract unit prices, per linear foot, for each of these items, in place and accepted by the Engineer. These prices shall be full compensation for excavation, conduit installation, connection to manholes, equipment, etc., gravel, concrete, where applicable, backfill and compaction and restoration in kind of all disturbed/damages surfaces and all else incidental thereto for which separate payment has not been provided for elsewhere.

The pull box shall be measured on per unit basis, and the unit cost shall be full compensation for furnishing and installation; including excavation, gravel, concrete, where applicable, backfill and compaction and restoration in kind of all disturbed/damages surfaces and all else incidental thereto for which separate payment has not been provided for elsewhere.

Payment Items

		Unit
12.2.20a	Traffic Control Signal Removed & Stacked	Lump Sum
12.2.20b	Traffic Signal Type 8DW with 2 spar BIU's	Lump Sum
12.2.20c	Pull Box 12" X 12"	Each
12.2.20d	3" Electrical Conduit (Type NM)	Linear Foot
12.2.20e	2" Electrical Conduit (Type NM)	Linear Foot

SECTION 13 STREET LIGHTING SYSTEM SPECIFICATIONS

GENERAL

The following standards and definitions shall apply to the work of this Section.

The work under these items shall conform to the relevant provisions of Section 800 of the MHD Specifications, and the following:

The work shall include the furnishing and installation of the following items: black steel light poles, anchor bolts and foundations; luminaires; conduit; pull boxes; all cable and wiring; ground rods, equipment grounding and bonding; service connection; meter; and all other equipment, materials and incidental costs necessary to provide a complete, fully operational street lighting systems as specific herein and as shown on the plans.

13.1 PEDESTRIAN LIGHT POLE AND LUMINAIRE

The pedestrian light pole and luminaire shall be as manufactured by VISCO, Inc, as described below, or an approved equal. The local representative for VISCO, is SK & Associates, 20/22 Carver Circle, Canton, MA, 02021, (781) 272-821-1700.

The pedestrian light pole post shall be steel, one-piece construction, with a classical tapered base design. The shaft shall be 6 inches in diameter and fluted. The post shall be 12 feet in height, catalog number V1-C/18-1-F. The light poles shall be delivered pre-wired for easy connection.

The pedestrian light pole luminaire shall be a caged acorn style consisting of a decorative luminaire, base with an integral globe holder/ballast housing, decorative arms, band, and finial, with an acorn shaped globe. The luminaire shall be catalog number 199/50wHPS/19c. All luminaries shall be 50w HPS unless otherwise specified on the plans.

Submittals

At least 7 days prior to purchase contractor shall provide Town Of Needham DPW with a custom color chip indicating the color and finish of the light poles. The Manufacturer shall provide the following samples and submittals to Town Of Needham DPW for review and approval. Manufacturer shall not fabricate materials until the Town Of Needham DPW's review of samples, certifications or test results has been obtained. Delivered materials shall closely match the approved samples.

1. Shop Drawings: Submit Shop Drawings for the light poles and luminaires.
2. Manufacturer's product literature: Submit manufacturer's material descriptions and installation instructions for the light poles and luminaires.
3. Color samples: Submit color chip or chips of custom, black, powder-coat finish for approval by Town Of Needham DPW. Black colored chips shall be

minimum 3” by 3” dimension prepared on aluminum and coated as per specifications for review by Town Of Needham DPW prior to beginning the painting work of this Section.

4. Finish schedule: Schedule outlining breakdown of surface preparation techniques and coating materials to be applied.

Delivery, Handling, and Storage

Manufacturer shall handle, pack and ship finished light poles and luminaires in such a manner as to minimize damage to the color finish. Upon arrival at Town Of Needham DPW it shall be the Manufacturer’s responsibility to take equal precautions during unloading and stockpiling. Supply suitable touch-up paint, exactly matching the color and finish of the color finish. Provide 2 gallons of touch-up paint to Town Of Needham DPW for its own use.

Equivalent alternative designs and manufactures may be used only by the approval of the Engineer.

PAINTING

The work under this Section of the specifications consists of preparation of bare steel and galvanized steel and painting of said items. All external components of the light pole shall be painted black.

Provide not less than three coats of paint on all steel surfaces and two coats of paint on galvanized surfaces: one primer coat, one intermediate coat and one finish coat of the specified painting system described in this Section.

Provide all staging, scaffolding and rigging required for this work.

COLOR

Color of the finish coat shall be BLACK. Primer and intermediate coats shall be white and lighter blue respectively providing for ease of inspection for mils dft.

STORAGE AND USE OF MATERIALS

Materials brought to the site shall be stored in an approved location in manufacturer's original sealed containers, bearing the manufacturer's standard label, indicating type and color. Materials shall be delivered in sufficient quantities in advance of the time needed in order that work will not be delayed in any way.

All materials shall be stored in designated spaces in a manner which meets the requirements of applicable codes and fire regulations. When not in use, such spaces shall be kept locked and inaccessible to those not employed under this Section. Each space shall be provided with a fire extinguisher of carbon dioxide or dry chemical

type bearing the label of the National Board of Fire Underwriters and tag of recent inspection.

Do not use building sanitary system for mixing or disposal of refuse material. Carry water to mixing rooms and dump waste material in a refuse receptacle. Remove oily rags and waste each day.

QUALITY ASSURANCE

Where a manufacturer makes more than one grade of any material specified, use the highest grade of each type, whether or not the material is mentioned by trade name in these Specifications.

Include on labels of all containers the manufacturer's name, the product name and number, the color and batch number.

No claim by the Painting Subcontractor concerning the unsuitability of any material specified or his ability to produce first class work with same will be entertained after Contract is signed.

MATERIALS

The material for this work shall conform to the requirements of Section M7 of the MHD Specifications and as outlined herein.

All steel surfaces to be painted under this Section shall be treated under this Section as follows:

Accomplish all paint shop preparation of bare steel surfaces using the same surface preparation. Prepare bare steel prior to application of the primer coat by brush blasting the bare steel or galvanized coating to a 1 -1.5 mil. profile to accept the primer coat. Brush blasting shall be according to SSPC-SP6 Commercial Blast Cleaning specifications.

The coating system for bare steel surfaces shall be a two-coat system over galvanized steel.

Intermediate coat shall be Heavy Duty Epoxy, B67300, at 4.0 - 6.0 mils dft.

Finish coat shall be Hi-Solids Polyurethane, B65W300, at 3.0 - 4.0 mils dft.

All components of the coating system shall conform to the 1985 Department of Environmental Protection Administrative Regulations for the Abatement of Air Pollution Content (Volatile Organic Compounds) as determined through ASTM D3960 Standard Practice.

PREPARATION AND FINISHING

All coatings shall be applied in the shop except for field touch-up after erection, except where otherwise indicated to be field painted. Shop paint metal work except for minor touch-up. Touch-up shop applied paint systems with the same paints, wherever damaged spots occur during installation. Do all painting in the shop and comply to SSPC-PA1, Paint Application Specification No. 1, for shop painting and according to the recommendations of the paint manufacturer. Do not mix brand names of paints. All paint shall be of one uniform system as specified in this section.

All metal shall be conditioned as specified herein. This conditioning shall be applied under this Section prior to the application of the paint system.

Slip-critical field joint contact surfaces shall receive only a single application of zinc silicate primer conforming to Article M7.04.07 at 2.5 to 3.5 mils dry film thickness.

All other field steel contact joint surfaces shall receive the zinc primer at 3.0 to 5.0 mils dft.

The coating system shall be applied by spray equipment of a type and size capable of applying the material within the specified thickness range in one application as approved by the Engineer. The applicator shall adhere strictly to cure times, application and curing ambient conditions and re-coat times as the individual coats of the specified system are applied. Brushes may be used in those restrictive areas where spray application would not achieve acceptable results; brushing technique must be suitable to achieve an acceptable finish.

All storage, mixing, thinning, application and curing efforts, techniques and methods shall be accomplished in strict accordance with the written requirements and procedures published by the respective coating material manufacturer.

All compressed air sources shall be properly sized and designed with oil and moisture separators, attached and functional, to allow air at the nozzle, either for blast cleaning, blow-off, painting or breathing, to be oil-free and moisture-free. It shall be of sufficient pressure to accomplish the associated work efficiently and effectively.

Surfaces shall be painted with the specified primer material before the end of the same work shift in which they were blast cleaned and before any visible rust back occurs, unless otherwise approved by the Engineer.

Surfaces not in contact with other steel surfaces but inaccessible after assembly shall be coated prior to assembly.

Critical attention shall be given to edges and bolted connections. All bolts, including anchor bolts installed by others, nuts and washers shall be fully coated and no gaps left unfilled and un-coated.

All plate and sharp edges and other sharp discontinuities shall be hand striped with a brush in the longitudinal direction with the intermediate coat material prior to the intermediate coat application. Strict attention must be directed to the re-coat times of all applied materials. Shop bolted connections shall also have all bolt heads and nuts striped in a circular brush motion with the same material.

All applied coating shall have no runs, sags, holidays or discontinuities; the dry film thickness shall be within the range specified. There shall be no color variation in the topcoat as determined by Federal Standard 595a. Also, there shall be no gloss variation in the topcoat where tested in accordance with ASTM D523.

Erection marks for field identification of members and weight marks shall be affixed in such a manner as to facilitate their removal upon final assembly.

When the field erection work is completed, including all connections, all adhering rust, scale, dirt, grease or other foreign material on connections, bolts, nuts and around welds shall be removed by field abrasive blast cleaning in accordance with SSPC-SP 10, Near-White Blast Cleaning and solvent cleaning in accordance with SSPC-SP 1 first where appropriate. Feather all edges of the shop-applied coating by mechanical means to afford a tight edge and smooth transition through the coating system to the substrate.

Scratches, gouges and other damaged areas of the coating system may be power tool cleaned to bright metal in accordance with SSPC-SP 3, Power Tool Cleaning or spot field blasted.

All field touch-up shall use the same sequence and thickness of coatings as originally specified for use by the fabricator. Touch-up application efforts may be done by any means appropriate, approved by the respective manufacturer and the Engineer.

Within 30 days following execution of the Contract, the Contractor shall submit shop drawings for light poles and luminaires, a list of equipment, and manufacturer's equipment specifications to the Engineer in accordance with the relevant provisions of Section 815.20.

No work shall be commenced by the Contractor until approval of the shop drawings and manufacturer's data has been received in writing from the Engineer. Approval of these drawings will be general in character and shall not relieve the Contractor from the responsibility of, or the necessity of, furnishing materials and workmanship conforming to the plans and specifications.

The Contractor shall deliver to the Engineer a certificate of compliance with the manufacturer for all materials purchased from the manufacturer.

LIGHT POLES REMOVED AND RESET

Light poles to be removed and reset shall be carefully removed from their original location, and reset in their new location. If the contractor stores the pole after removing, it shall be stored off-site and protected against damage.

If required, a pull box shall be installed at the original location of the light pole for the purpose of making splices. Conduit shall extend from the pull box to the new pole location. Payment for the pull box and conduit shall made under their respective items, and not included in the price for Light Pole Removed and Reset. If a pull box is not required at the original location, the hole shall be backfilled with gravel, and the surface shall match the existing surrounding surface.

Payment for Light Pole Removed and Reset shall be for EACH light pole removed and reset, and shall include all excavation, backfill, foundation, wiring, and other equipment, labor, materials necessary for a functioning light, complete and in place.

Payment Items

		Unit
13.1.1a	Pedestrian Light Pole	Each
13.1.2a	Pedestrian Lighting Luminaire	Each
13.1.3a	Light Pole Removed and Reset	Each

13.2 LIGHT STANDARD FOUNDATIONS

DESCRIPTION

Work under this Item shall conform to Section 801, CONDUIT, MANHOLES, HANDHOLES, PULL BOXES AND FOUNDATIONS of the Standard Specifications and the following.

MATERIALS

Foundations shall be steel reinforced precast cement concrete conforming to the materials and dimensions shown on the plans.

Conduits shall be Type RM, Steel Plastic Coated.

Anchor bolts shall be of size, length and design shown on the Drawings and shall develop proper bond in transferring loads to the cement concrete foundations. Anchor bolts to anchor light pole base flange to concrete footing shall be hot rolled steel anchor bolts with a 60 ksi minimum yield strength and shall conform to ASTM 307 and shall be a minimum of 1 inch by 36 inches with a 4 inch "L" bend at the unthreaded end. Bolts shall be threaded for a minimum of 5 inches from the top. Four anchor bolts, each with 2 hexagonal nuts which conform to ASA Standard B18.2, 2

flat washers and 2 steel lock washers, all galvanized in accordance with ASTM A123-53 after all fabrication, including bending, has been completed, shall be furnished for each light pole foundation. Bolt circle pattern shall be as shown on the Drawings.

Concrete foundations shall conform to the requirements of 801.62 in the Standard Specifications.

CONSTRUCTION METHODS

Foundations shall be fabricated in accordance with Section 801.62 of the Standard Specification and as follows.

All bolts shall be accurately located with a template. Bolts shall be plumb with the required bolt projection. The top and sides of each foundation shall be chamfered.

The foundations shall be constructed with a concrete mixture having a minimum of 5000 psi compressive strength at 28 days.

After placing the mix in the forms, it shall be vibrated by mechanical means long enough to insure complete placement without honeycombing. Care shall be exercised not to over-vibrate and reduce air content below specifications. Curing shall be by the wet method with material kept moist at a temperature of 50 degrees F. for a minimum of 72 hours. Thereafter, it shall be air-cured until it reaches design strength specification of 5000 psi compressive strength.

All foundations shall be installed at the location as shown on the Drawings except as approved deviations, which are required to meet field conditions.

All foundations shall be installed on undisturbed subgrade or compacted gravel base. All foundations shall be set plumb and true to grade. The top of each foundation shall be level.

The Contractor shall carefully mark the proposed location of the concrete foundations, and then he shall determine if any utilities or underground or overhead obstruction will prevent the installation at this location. Similar marking shall be done for the conduit runs to the foundations. If such an obstruction is evident, the Contractor shall request permission from the Engineer to move or adjust the location of the foundation.

If, in the opinion of the Engineer, nearby excavation, obstructions or unusual conditions of the soil warrant, the depth and width of the below-ground foundation may be augmented by the pouring of additional 3000 psi, 28 day compressive strength concrete.

COMPENSATION

PEDESTRIAN LIGHT STANDARD FOUNDATION-PRECAST will be paid for at the contract unit price EACH, installed complete-in-place including all labor, equipment, concrete bases, excavation, backfill, anchors, fasteners, and sealant all which price and payment shall constitute full compensation for complete compliance with the requirements of this Item including all labor, equipment, tools, incidental work and construction methods.

Payment Items

		Unit
13.2.1a	Pedestrian Light Standard Foundation	Each

13.3.1 CONDUIT

Electrical conduit for street light systems shall be 2 inch diameter, and shall conform to the relevant provision of Section 12.2.1 of these specifications. Payment for the conduit shall be made under item 12.2.20d, 2 inch Electrical Conduit (Type NM).

13.4 PULL BOXES

General

All pull boxes on this project shall be 12 inch by 12 inch (SD2.031). Pull Boxes shall be built to the lines, grades, dimensions and designs shown on the plans and details hereinafter, with the necessary frames covers etc. Construction methods for precast concrete units shall conform to the relevant provisions of Section 901, and Subsection M4.02.14 of the MHD Specifications. Frames and covers shall be LeBaron S612 (80 lbs), or equivalent.

Pull Boxes shall be measured for payment as a unit each. The accepted quantities (including cost of castings) of Pull Boxes will be paid for at the contract unit price each complete in-place. Any incidental work for materials for which no basis of payment is provided will be considered as completely covered by the unit price bid.

Payment Items

		Unit
13.4.1a	Pull Box 12 In. x 12 In. – SD2.031	Each

13.5 WIRING, GROUNDING AND SERVICE CONNECTIONS

General

Work included under this item shall include the wiring, grounding, and furnishing a service connection, including a meter (Nstar fees), to the proposed street lighting

system, as shown on the plans. The location of the meter shall be determined by the Town of Needham.

The work shall conform to the relevant provisions of Section 813 of the MHD Specifications and all local codes. All work shall be performed under the supervision of licensed electrician. The work shall not be considered complete until inspected and approved by the Town of Needham' electrical inspector.

Payment Items

		Unit
13.5.1a	Wiring, Grounding and Service Connection	Lump Sum

TOWN OF NEEDHAM, MASSACHUSETTS
DEPARTMENT OF PUBLIC WORKS

16-INCH WATER MAIN REPLACEMENT
CONTRACT NO. 14DPW038C
JULY 2013

BOARD OF SELECTMEN

DANIEL P. MATTHEWS, CHAIRMAN
JOHN A. BULIAN, VICE CHAIRMAN
MAURICE P. HANDEL, CLERK
MATTHEW BORRELLI

TOWN MANAGER

KATHLEEN P. FITZPATRICK

DEPARTMENT OF PUBLIC WORKS

RICHARD P. MERSON, DIRECTOR
ROBERT A. LEWIS, ASSISTANT DIRECTOR
ANTHONY L. DEL GAIZO, P.E., TOWN ENGINEER
VINCENT J. ROY, WATER AND SEWER SUPERINTENDENT

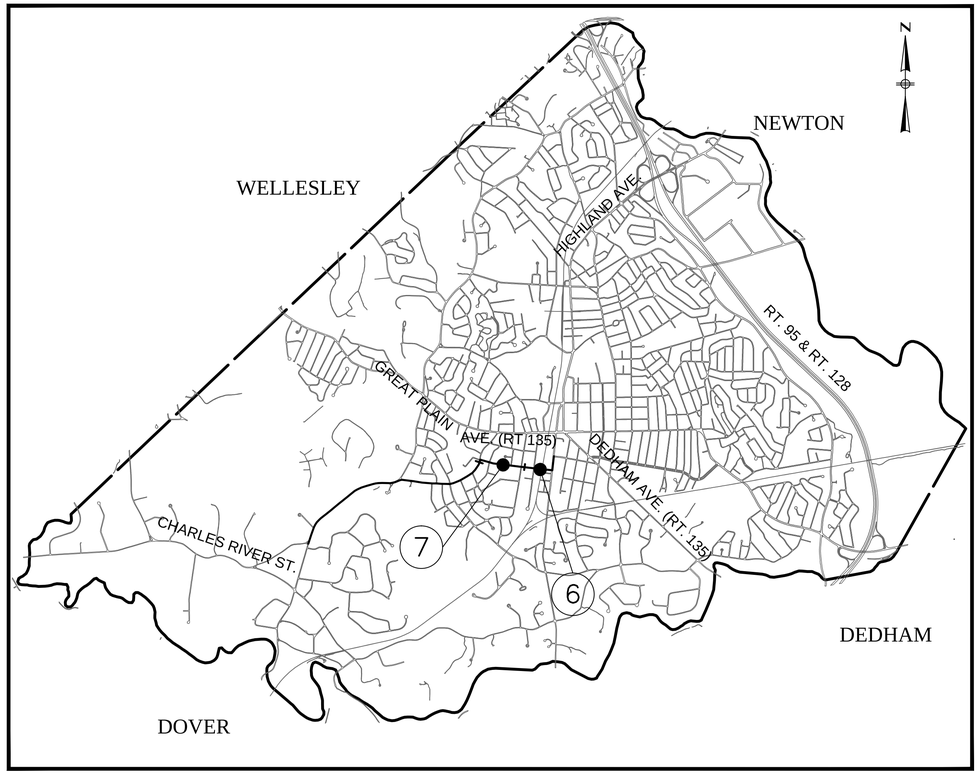

LOCATION MAP
NOT TO SCALE

PLAN INDEX

SHEET NO.	DESCRIPTION
1	COVER SHEET
2	LEGEND & GENERAL NOTES
3	DETAILS I
4	DETAILS II
5	DETAILS III
6	CHESTNUT STREET
7	OAK STREET

BETA Group, Inc.
Engineers • Planners • Landscape Architects • Scientists
315 Norwood Park South, Norwood, MA 02062

COMMONWEALTH OF MASSACHUSETTS
MICHAEL R. HORNIG
CIVIL
No. 43465
REGISTERED PROFESSIONAL ENGINEER
7-1-13

REGISTERED PROFESSIONAL ENGINEER DATE

LEGEND

EXISTING	PROPOSED	
BND	Pk	BOUND (ALL TYPES)
		PK NAIL
		EDGE OF PAVEMENT
		WATER BODY EDGE
		RIVER OR STREAM
		RAILROAD TRACKS
		HAYBALE
		PROPERTY LINES
		STONE WALL
		PAVED DRIVEWAY
		TREE LINE
		SHRUB
		TREE (TYPES)
		CHAIN LINK FENCE
		WOODEN FENCE
		GUARD RAIL
		LOOP DETECTOR LINE
		CURB
BH-#	BH-#	BORING (45 DEG. & 90 DEG.)
		SIGN (TYPES)
		WELAND FLAG
		WETLAND SWAMP SYMBOL
MB	MB	MAILBOX (PUBLIC & PRIVATE)
		LIGHT POLE (PRIVATE)
	P#000	GUY WIRE (TYPES)
	LP#000	UTILITY POLE
		UTILITY POLE/LIGHT POLE
D		DRAIN MANHOLE
CB CB CB		CATCH BASIN (TYPES)
GG		GAS GATE
W		WATER MANHOLE
T		TELEPHONE MANHOLE
E		ELECTRIC MANHOLE
S		SEWER MANHOLE
WG		WATER GATE
HYD		HYDRANT ASSEMBLY
		WATER METER
8" W		WATER LINE
		WATER MAIN WITH INSULATION
		SOLID SLEEVE
		END CAP
		BEND AND TEE
		REDUCER
		WATER SHUT OFF/CURB STOP
S		SEWER LINE
T		TELEPHONE LINE (UNDERGROUND)
E		ELECTRIC LINE (UNDERGROUND)
D		DRAIN LINE
G		GAS LINE
123.45 ×		SPOT GRADE
		END PIPE DOUBLE
		END PIPE SINGLE
		SIGNAL CONTROLLER CABINET (GROUND MOUNTED)
HH		SIGNAL HAND HOLE (SQUARE)
		SIGNAL MAST ARM POLE
		SIGNAL PEDESTRIAN HEAD POLE
		SIGNAL HEAD
SG		SEWER GATE

ABBREVIATIONS

ABAN.	ABANDON
ADJ.	ADJUST
BIT.	BITUMINOUS
BHMH	BRADLEY HEAD MANHOLE
BSMH	BURIED SEWER MANHOLE
CB	CATCH BASIN
CEM.	CEMENT
CIP	CAST IRON PIPE
CLF	CHAIN LINK FENCE
CMP	CORRUGATED METAL PIPE
CSMH	COMBINED SEWER MANHOLE
CONC.	CONCRETE
COND.	CONDUIT
CW	CROSS WALK
DI	DUCTILE IRON (CEMENT LINED)
DIA.	DIAMETER
DWY.	DRIVEWAY
EL.	ELEVATION
EXIST.	EXISTING
(F)	FIELD LOCATION
FDN.	FOUNDATION
FND	FOUND
GRAN.	GRANITE
GG	GAS GATE
GS	GAS SERVICE
H.E.S.	HIGH EARLY STRENGTH
INV.	INVERT
LST	LANDSCAPE TIMBER
LT	LEFT
(M)	MARKED ON GROUND
MH	MANHOLE
NPV	NO PIPES VISIBLE
P&R	POST & RAIL
PROP.	PROPOSED
PVMT.	PAVEMENT
PVC	POLYVINYL CHLORIDE
(R)	RECORD
R	RIM
R&R	REMOVE AND RESET
RCP	REINFORCED CONCRETE PIPE
REM.	REMOVE
RET.	RETAIN
S.C.	SERVICE CONNECTION
SCH.	SCHEDULE
SDWK.	SIDEWALK
SL	STOP LINE
THLD	THRESHOLD
TOB	TOP OF BELL
TYP.	TYPICAL
WCR	WHEELCHAIR RAMP
WG	WATER GATE
WS	WATER SERVICE
WST	WELDED STEEL TUBING
VCP	VITRIFIED CLAY PIPE

GENERAL NOTES

1. THE LOCATION OF SUBSURFACE UTILITIES SHOWN IS APPROXIMATE AND NOT GUARANTEED TO BE COMPLETE OR ACCURATE. THE CONTRACTOR SHALL VERIFY THE LOCATIONS AND ELEVATIONS OF EXISTING UTILITY LINES AND STRUCTURES PRIOR TO COMMENCEMENT OF WORK. THE CONTRACTOR MUST NOTIFY DIGSAFE THE DEPARTMENT OF PUBLIC WORKS PRIOR TO ANY EXCAVATION, DEMOLITION OR EXPLOSION WORK IN PUBLIC OR PRIVATE WAYS OR UTILITY COMPANY RIGHT OF WAY OR EASEMENT. FOR WATER AND SEWER WORK, NOTIFY NEEDHAM DEPARTMENT OF PUBLIC WORKS AT 781-455-7534, AT LEAST 72 HOURS IN ADVANCE OF THE NEED FOR MARKOUTS.

2. WHERE AN EXISTING UTILITY IS FOUND TO CONFLICT WITH THE PROPOSED WORK, THE LOCATION, ELEVATION AND SIZE OF THE UTILITY SHALL BE ACCURATELY DETERMINED WITHOUT DELAY BY THE CONTRACTOR, AND THE INFORMATION FURNISHED TO THE ENGINEER FOR THE RESOLUTION OF THE CONFLICT.

3. THE CONTRACTOR SHALL MAKE ALL ARRANGEMENTS FOR THE ALTERATION AND ADJUSTMENT OF GAS, ELECTRIC, TELEPHONE, CABLE TV, FIRE ALARM AND ANY OTHER PUBLIC OR PRIVATE UTILITIES BY THE UTILITY COMPANIES. ALL UTILITY CASTING AND FIRE ALARM BOXES SHALL BE ADJUSTED TO FINISH GRADE BY THEIR RESPECTIVE OWNERS. ONLY THE NEEDHAM DEPARTMENT OF PUBLIC WORKS SHALL OPERATE GATE VALVES AND HYDRANTS ON LIVE WATER MAINS FOR SHUT DOWNS OR TURN-ONS. THE CONTRACTOR SHALL NOTIFY THE NEEDHAM WATER DEPT. 48 HOURS IN ADVANCE OF THE NEED FOR VALVES OR HYDRANTS TO BE OPERATED.

4. TREES WITHIN THE LIMITS OF EXCAVATION, GRADING OR PAVING SHALL NOT BE REMOVED UNLESS APPROVED BY THE ENGINEER.

5. THE TERM "PROPOSED" (PROP.) MEANS WORK TO BE CONSTRUCTED USING NEW MATERIALS OR, WHERE APPLICABLE, RE-USING EXISTING MATERIALS IDENTIFIED AS "REMOVE AND RESET" (R&R) AS DIRECTED BY THE OWNER/ENGINEER.

6. **PRIOR TO THE START OF ANY CONSTRUCTION THE CONTRACTOR SHALL CONDUCT TEST PITS** AT LOCATIONS WHERE NEW PIPING IS TO BE CONNECTED TO EXISTING PIPING AND STRUCTURES AND TO FIELD VERIFY THE EXACT SIZE, MATERIAL, LOCATION, INVERT ELEVATION AND ALIGNMENT (VERTICAL AND HORIZONTAL) OF EXISTING UNDERGROUND PIPES AND STRUCTURES. THE CONTRACTOR SHALL NOTIFY THE ENGINEER OF ANY CONFLICTS BETWEEN PROPOSED PIPING AND EXISTING PIPING PRIOR TO STARTING INSTALLATION OF THE PROPOSED PIPING.

7. EXISTING UTILITIES ENCOUNTERED DURING CONSTRUCTION SHALL BE PROTECTED AND SUPPORTED AT ALL TIMES BY THE CONTRACTOR. THE CONTRACTOR SHALL CONDUCT HIS OPERATIONS TO INTERFERE AS LITTLE AS POSSIBLE WITH EXISTING UTILITIES. PAYMENT FOR PROVIDING SAID PROTECTIONS AND SUPPORTS SHALL BE CONSIDERED A PART OF AND PAID FOR UNDER THE APPROPRIATE PIPE ITEMS UNLESS OTHERWISE INDICATED AND/OR DIRECTED BY THE OWNER. THE CONTRACTOR SHALL HAVE NO CLAIM FOR ADDITIONAL COMPENSATION BY REASON OF DELAY AND/OR INCONVENIENCE IN ADAPTING HIS OPERATIONS ACCORDINGLY.

8. WHERE EXISTING MATERIALS ARE ENCOUNTERED THAT, IN THE OPINION OF THE OWNER/ENGINEER, ARE UNSUITABLE FOR BEDDING, BACK FILLING OR OTHER INTENDED USE, SUCH MATERIALS SHALL BE REMOVED AS DIRECTED AND REPLACED WITH SUITABLE CRUSHED STONE AND/OR SELECTED BORROW, AS DIRECTED BY THE OWNER OR THE ENGINEER AND PAID FOR UNDER THE APPROPRIATE BID ITEMS. EXCAVATION MATERIAL TO BE DISPOSED OF SHALL NOT BE STOCKPILED IN THE STREET. ARRANGEMENTS SHALL BE MADE TO DISPOSE OF UNSUITABLE MATERIAL ON A DAILY BASIS.

9. BASE PLANS AND TOPOGRAPHY WERE OBTAINED FROM MASSACHUSETTS GEOGRAPHIC INFORMATION SYSTEMS (GIS) MAPPING OBTAINED FROM THE TOWN OF NEEDHAM AND DEVELOPED BY BETA GROUP, INC. CHESTNUT STREET IMPROVEMENT AT BETH ISRAEL DEACONESS MEDICAL CENTER WAS RECENTLY COMPLETED. IMPROVEMENTS LOCATIONS ARE APPROXIMATED ON THE PLANS, CONTRACTOR TO VERIFY EXACT LOCATIONS.

10. ALL ELEVATIONS REFER TO NGVD 29 DATUM. CONTRACTOR TO LOCATE AND PROTECT CONTROL AND REFERENCE POINTS.

11. THE CONTRACTOR SHALL NOTIFY IN ADVANCE ALL THOSE WHO WILL BE AFFECTED BY THE WORK. THE CONTRACTOR, AT NO ADDITIONAL COST TO THE OWNER, SHALL PURCHASE A GENERAL NEWSPAPER NOTICE, TO BE APPROVED BY THE OWNER AND ENGINEER, THAT SHALL BE ISSUED BY THE CONTRACTOR IN THE NEEDHAM TIMES 7-DAYS PRIOR TO THE START OF WORK. BEFORE CONSTRUCTION STARTS IN ANY STREET AND BEFORE NOTICEABLE CHANGES IN WATER OR SEWER SERVICE OCCUR, EACH CONSUMER SHALL BE DIRECTLY INFORMED OF THE WORK BY A NOTICE APPROVED BY THE ENGINEER AND DELIVERED TO THE BUILDING BY THE CONTRACTOR STATING HOW THEY WILL BE AFFECTED AND THE EXPECTED DURATION OF THE WORK. NOTICE WILL BE NO LATER THAN 48 HOURS BEFORE COMMENCEMENT OF WORK.

12. WHERE NECESSARY TO REMOVE CURBS, CATCH BASINS, OR DRAINS TO COMPLETE THE WORK THE CONTRACTOR SHALL REPLACE THEM TO THE SATISFACTION OF THE ENGINEER AT NO ADDITIONAL COST TO THE OWNER.

13. ANY EXISTING PIPE OR UTILITY DAMAGED BY THE CONTRACTOR'S OPERATIONS SHALL BE REPAIRED IMMEDIATELY BY THE CONTRACTOR AT NO COST TO THE OWNER.

14. CONTRACTOR SHALL INSTALL, MAINTAIN, AND REMOVE EROSION CONTROL AROUND ALL CATCH BASINS ALONG PROJECT ROUTE, THE COST OF WHICH SHALL BE CONSIDERED A PART OF AND PAID FOR UNDER THE APPROPRIATE BID ITEM(S).

15. THE CONTRACTOR SHALL TAKE ALL NECESSARY PRECAUTIONS TO PREVENT SEDIMENT OR SEDIMENT LADEN WATER FROM ENTERING CATCH BASINS, DRAINAGE SYSTEMS, SEWER SYSTEMS OR WATER BODIES. THE CONTRACTOR SHALL BE RESPONSIBLE FOR THE REMOVAL OF ANY SEDIMENTS THAT ENTER THE SYSTEM.

16. THE CONTRACTOR SHALL COORDINATE THE REQUIRED TRAFFIC CONTROL WITH THE TOWN OF NEEDHAM POLICE AND FIRE DEPARTMENT PRIOR TO THE START OF CONSTRUCTION. DURING THE SCHOOL YEAR THE CONTRACTOR SHALL COORDINATE TRAFFIC CONTROL WITH THE SCHOOL DEPARTMENT.

17. THE CONTRACTOR SHALL SUBMIT A TRAFFIC MANAGEMENT PLAN ACCEPTABLE TO THE NEEDHAM POLICE, FIRE AND PUBLIC WORKS DEPARTMENTS PRIOR TO CONSTRUCTION.

18. THE CONTRACTOR SHALL IMMEDIATELY FILL ALL POT HOLES THAT OCCUR DURING CONSTRUCTION.

19. ALL FRAMES, GRATES, COVERS, GATE BOXES, ETC. SHALL BE ADJUSTED TO GRADE ACCORDINGLY, THE COST OF WHICH SHALL BE CONSIDERED A PART OF AND PAID FOR UNDER THE CASTING ADJUSTMENTS BID ITEMS IN SECTION 9.

20. INVERTS AND DIRECTIONS OF PIPES AND CONDUITS ARE SHOWN FOR THE PURPOSE OF INDICATING THE BASIC PARAMETERS USED DURING THE DESIGN. HOWEVER, MINOR CHANGES IN HORIZONTAL AND VERTICAL LOCATIONS MAY BE REQUIRED DURING CONSTRUCTION AS FIELD CONDITIONS WARRANT. FINAL LOCATIONS OF OTHER PIPES AND/OR CONDUITS SHALL BE DETERMINED IN THE FIELD. ANY CHANGES SHALL BE APPROVED BY THE ENGINEER.

21. ALL GRASSED AREAS DISTURBED BY THE CONSTRUCTION OPERATIONS SHALL BE LOAMED AND SEEDED IN ACCORDANCE WITH THE SPECIFICATIONS. RESTORATION SHALL BE EQUAL TO OR BETTER THAN THAT WHICH EXISTED PRIOR TO CONSTRUCTION AS DETERMINED BY THE OWNER/ENGINEER. PAYMENT SHALL BE CONSIDERED PART OF AND PAID FOR UNDER THE PIPE ITEMS AS APPLICABLE UNLESS OTHERWISE INDICATED.

22. ALL CURBING AND SIDEWALKS DISTURBED BY CONSTRUCTION OPERATIONS SHALL BE REPLACED AND RESTORED, IN KIND, AS DIRECTED BY THE OWNER OR THE ENGINEER. PAYMENT SHALL BE CONSIDERED PART OF AND PAID FOR UNDER THE PIPE ITEMS AS APPLICABLE UNLESS OTHERWISE INDICATED.

23. ALL SIDEWALKS AND WHEELCHAIR RAMP AREAS DISTURBED BY THE CONTRACTOR'S OPERATIONS SHALL BE REPAIRED IN CONFORMANCE WITH THE AMERICANS WITH DISABILITIES ACT (ADA) REQUIREMENTS AND THE ARCHITECTURAL ACCESS BOARD (AAB) REQUIREMENTS AT THE CONTRACTOR'S EXPENSE.

24. THE CONTRACTOR SHALL REMOVE AND RESET ALL SIGNS, TRAFFIC LOOPS AND ROADWAY MARKINGS DISTURBED DURING CONSTRUCTION IN CONFORMANCE WITH THE MASSACHUSETTS STANDARD SPECIFICATIONS AND CONSTRUCTION STANDARDS AT NO ADDITIONAL COST TO THE OWNER.

25. AREAS OUTSIDE THE LIMITS OF PROPOSED WORK DISTURBED BY THE CONTRACTOR'S OPERATIONS SHALL BE RESTORED BY THE CONTRACTOR TO THEIR ORIGINAL CONDITION AT THE CONTRACTOR'S EXPENSE.

26. THE CONTRACTOR SHALL SUBMIT A SEQUENCE OF WORK SCHEDULE PRIOR TO CONSTRUCTION IN ACCORDANCE WITH SPECIFICATION SECTION 3 ARTICLE IV.

27. CONTRACTOR TO MAINTAIN EXISTING WATER, SANITARY AND STORM DRAINAGE FLOWS DURING CONSTRUCTION.

28. REPAVEMENT OF SETTLED AREAS AND PAVEMENT CROWN RESTORATION WITHIN THE TRENCH LIMITS SHALL BE THE RESPONSIBILITY OF THE CONTRACTOR.

29. SHEETING SHALL BE USED WHERE SHOWN ON THE DRAWINGS OR WHERE DIRECTED BY THE ENGINEER. SHEETING SHALL BE LEFT IN PLACE BELOW A LINE OF 1'-0" ABOVE THE TOP OF THE PIPE UNLESS OTHERWISE DIRECTED BY THE ENGINEER.

30. STREET SIDELINES AND LOT LINES OF ABUTTING PROPERTIES WERE COMPILED FROM THE TOWN OF NEEDHAM ASSESSOR'S MAPS AND ARE APPROXIMATE.

31. PROPERTY LINES WERE OBTAINED FROM THE TOWN GIS MAPPING FROM **APRIL, 2004**.

32. ALL MANHOLES AND CATCH BASINS TO BE ABANDONED SHALL HAVE THE TOP SECTION REMOVED AND DISPOSED OF TO A MINIMUM OF 3'-0" BELOW FINISHED GRADE, FILLED WITH COMPACTED SAND OR GRAVEL GRADED AND REPAVED TO MATCH EXISTING STREET ELEVATIONS. ALL OPENINGS SHALL BE PROPERLY PLUGGED PRIOR TO STRUCTURE ABANDONMENT. CURBS AND SIDEWALKS SHALL BE RESET AS NECESSARY.

33. ALL OPEN TRENCHES SHALL BE BACKFILLED COMPLETELY AT THE END OF EACH DAY. STEEL PLATES MAY BE ALLOWED IF APPROVED BY THE ENGINEER.

34. TRENCHES SHALL BE MAINTAINED DAILY BY SWEEPING AND APPLICATION OF CALCIUM CHLORIDE TO CONTROL DUST AS DIRECTED BY THE ENGINEER.

35. PRIOR TO CONSTRUCTION, THE CONTRACTOR SHALL OBTAIN ALL ROADWAY ACCESS PERMITS AND APPROVALS FROM THE TOWN OF NEEDHAM FOR WORK IN TOWN ROADWAYS.

36. UTILITY RECORD DRAWINGS FOR WELLESLEY MUNICIPAL LIGHT PLAN, NSTAR GAS, NSTAR ELECTRIC, VERIZON, RCN, COMCAST AND WATER AND SEWER WERE OBTAINED IN 2007. BETH ISRAEL DEACONESS MEDICAL CENTER AS BUILT WAS OBTAINED IN 2012.

37. THE CONTRACTOR'S ATTENTION SHALL BE DRAWN TO THE FACT THAT THERE IS A POTENTIAL FOR NIGHT WORK AS REQUIRED.

WATER NOTES

1. MINIMUM PIPE COVER SHALL BE 5'-0".

2. EXCEPT WHERE OTHERWISE NOTED 12" MINIMUM CLEARANCE SHALL BE PROVIDED BETWEEN THE EXTERIOR OF THE WATER MAINS AND OTHER UTILITIES. SEE NOTE 4 FOR SEWER CLEARANCES.

3. AT CONNECTIONS BETWEEN EXISTING AND NEW WATER PIPES, BENDS AND EXTENSIONS NECESSARY FOR CONNECTIONS ARE NOT SHOWN. THE CONTRACTOR SHALL PROVIDE AND INSTALL THESE ITEMS AS NECESSARY AND INCLUDE THE COST UNDER THE APPROPRIATE BID ITEMS.

4. WATER MAINS SHALL MAINTAIN A HORIZONTAL CLEARANCE OF 10-FEET FROM THE CENTER OF THE PIPE TO THE CENTER OF THE SEWER. A VERTICAL CLEARANCE OF AT LEAST 18-INCHES BETWEEN THE BOTTOM OF THE WATER MAIN AND THE TOP OF THE SEWER AT PIPE CROSSINGS, AND THE SECTIONS OF WATER MAIN PIPE SHALL BE CENTERED OVER THE SEWER SO THAT THE JOINTS ARE AS FAR AS POSSIBLE FROM THE SEWER. IF IT IS NOT PRACTICAL TO MAINTAIN THE VERTICAL CLEARANCE, THE CONTRACTOR SHALL ENCASE THE SEWER IN CONCRETE.

5. CONTRACTOR SHALL ENCASE THAT PORTION OF THE NEW D.I. WATER MAINS AND ASSOCIATED SERVICES WHICH CROSS 18 INCHES OR LESS BELOW EXISTING SANITARY SEWERS AND SERVICES. CONCRETE ENCASEMENT OF WATER MAIN AND SERVICES SHALL BE AS SHOWN ON DETAIL SHEET AND ENCASEMENT SHALL EXTEND 10 FT. IN EACH DIRECTION FROM CENTERLINE CROSSING.

6. THE CONTRACTOR SHALL NOTIFY THE NEEDHAM FIRE DEPARTMENT ON A DAILY BASIS OF THE CURRENT LOCATION OF THE NEW WATER MAIN CONSTRUCTION WORK THROUGHOUT THE CONTRACT AT **781-455-7580**. NOTIFY THE NEEDHAM WATER AND SEWER DIVISION AT **781-455-7546** FOR EMERGENCY WATER MAIN WORK.

7. WHERE NEW WATER MAIN PASSES WITHIN 3-FEET OF A CATCH BASIN, DRAIN OR DRAIN MANHOLE THE CONTRACTOR SHALL INSULATE THE WATER MAIN FOR A DISTANCE OF 5-FEET ON BOTH SIDES OF THE STRUCTURE.

8. ALL TEMPORARY SERVICE SILL COCKS WILL REQUIRE SEPARATELY VALVED WYE FITTINGS ALLOWING THE BUILDING OWNERS TO ATTACH AN ADDITIONAL HOSE.

9. NEW HYDRANTS ARE SHOWN SCHEMATICALLY AND SHALL NOT BE PLACED ON PRIVATE PROPERTY. NEW AND EXISTING HYDRANTS CONNECTED TO A WATER MAIN WHICH IS NOT FULLY FUNCTIONAL SHALL BE BAGGED IMMEDIATELY.

10. TOWN OF NEEDHAM PUBLIC WORKS DEPARTMENT SHALL ASSIST CONTRACTOR IN LOCATING BURIED GATE VALVES AND HOUSE SERVICES NOT SHOWN ON DRAWINGS. THE CONTRACTOR SHALL NOTIFY THE NEEDHAM WATER DEPT. 24 HOURS PRIOR TO THE NEED FOR LOCATION MARK-OUTS.

11. ALL TEMPORARY HYDRANTS ARE TO BE COMPATIBLE WITH EQUIPMENT USED BY THE NEEDHAM FIRE DEPARTMENT. THE CONTRACTOR SHALL COORDINATE THIS REQUIREMENT WITH THE NEEDHAM FIRE CHIEF, THE WATER AND SEWER DEPARTMENT AND THE PUBLIC WORKS DIRECTOR.

12. NEW HYDRANTS SHALL BE **MUELLER COMPANY SUPER CENTURIAN 200 MODEL A-423 OR APPROVED EQUAL** AND OPEN TO THE **RIGHT**. EXACT LOCATIONS OF NEW HYDRANTS, HYDRANT VALVES, VALVES, FITTINGS, ETC. SHALL BE DETERMINED IN THE FIELD BY THE ENGINEER. NEW HYDRANTS **SHALL BE PAINTED YELLOW WITH WHITE BONNET AND SHALL BE OUTFITTED WITH A 5' FIBERGLASS RED/WHITE REFLECTIVE MARKER WITH A RED MINI FLAG. NEW VALVES SHALL OPEN TO THE RIGHT.**

13. REPLACE THE SECTION OF EXISTING LEAD SERVICE CONNECTIONS FROM THE WATER MAIN TO THE INSIDE OF THE HOUSE WHEN ENCOUNTERED IN THE FIELD WITH NEW 1" TYPE "K" COPPER TUBING. THE CONTRACTOR SHALL BE RESPONSIBLE FOR COORDINATION WITH THE HOME OWNER.

14. ALL WATER SERVICE CONNECTIONS WILL BE 1" TYPE "K" COPPER TUBING, UNLESS OTHERWISE NOTED.

15. NEW CURB STOPS SHOULD BE PLACED WITHIN THE GRASS PLOT IF POSSIBLE. CONNECTION TO THE EXISTING SERVICE SHALL BE MADE WITHIN THE PUBLIC RIGHT OF WAY AS CLOSE AS POSSIBLE TO THE PROPERTY LINE.

16. CONTRACTOR TO PROVIDE TEMPORARY BYPASS WATER SERVICE DURING CONSTRUCTION TO BE PAID UNDER TEMPORARY BYPASS ITEM. CONTRACTOR TO PRESENT TEMPORARY WATER MAIN LAYOUT PLANS AND SCHEDULE OF VALVES TO THE ENGINEER FOR APPROVAL PRIOR TO COMMENCING WORK. TEMPORARY BYPASS SHALL INCLUDE TEMPORARY HYDRANTS AT ALL EXISTING HYDRANT LOCATIONS.

17. BENDS AND FITTINGS ARE SHOWN SCHEMATICALLY ON THE DRAWINGS. THE CONTRACTOR SHALL PROVIDE VARIOUS SIZES, ANGLES AND SUCH ADDITIONAL BENDS AS NECESSARY TO COMPLETE WORK.

18. WHEN ABANDONING EXISTING TEES AND GATES, THEY SHALL BE LEFT IN THE OPEN POSITION. UPPER BOX SECTION TO BE REMOVED AND BOTTOM BOX SECTION FILLED WITH CONCRETE.

19. DUCTILE-IRON PIPE SHALL BE DOUBLE CEMENT LINED PUSH-ON TYPE JOINT CLASS 52. JOINT RESTRAINT FOR DUCTILE-IRON PIPE SHALL BE THRUST BLOCKS AND RESTRAINING GLANDS.

20. THE NEW WATER PIPELINE, VALVE AND HYDRANT LOCATIONS ARE APPROXIMATE. FINAL LOCATION SHALL BE DETERMINED AT THE TIME OF CONSTRUCTION. THE APPROXIMATE LOCATION OF THE PROPOSED PIPELINE IS INDICATED ON THE DRAWINGS. HOWEVER, THE FINAL LOCATION WILL BE GOVERNED BY THE ACTUAL LOCATION OF UNDERGROUND UTILITIES, OR OTHER CONTROLLING FACTORS.

21. ALL HYDRANT BRANCHES SHALL HAVE ANCHOR TEES.

22. DURING BYPASSING THE EXISTING WATER MAIN SHALL BE SHUTDOWN THROUGHOUT CONSTRUCTION AND SHALL BE REMOVED IN CONJUNCTION WITH THE INSTALLATION OF NEW WATER MAIN. BYPASS SHALL BE CONNECTED TO ALL WATER SERVICES AND FIRE SERVICES. ALL TEMPORARY BYPASS PIPING REQUIRES TRENCHING AT STREET CROSSINGS. FOR BIDDING PURPOSES IT SHALL BE ASSUMED THAT BYPASS PIPE WILL BE USED.

23. THE CONTRACTOR SHALL DISCHARGE ALL GROUNDWATER INTO HAYBALE TRAPS TO PREVENT SILTATION OF THE ROADWAY.

24. HYDRANT STEAMER CAPS SHALL BE LOCATED AT THE BACK OF SIDEWALK BUT NOT LOCATED ON PRIVATE PROPERTY.

25. NEW WATER MAIN TO BE INSTALLED UNDER EXISTING WATER MAIN WHENEVER POSSIBLE.

26. FIRE SERVICES SHALL BE A MINIMUM SIZE OF 4" CL52 DI PIPE OR EQUAL TO THE EXISTING SIZE.

27. THE CONTRACTOR SHALL USE BOTH MEGALUGS AND THRUST BLOCKS FOR HYDRANTS, FITTINGS AND VALVES DURING WATER MAIN INSTALLATION.

28. ALL EXISTING FIRE HYDRANTS AND GATE VALVES REMOVED, SHALL BE DELIVERED TO WATER AND SEWER DEPARTMENT AT THE DISCRETION OF THE WATER AND SEWER SUPERINTENDENT OR HIS DESIGNEE, OTHERWISE PROPERLY DISPOSE OF THOSE MATERIALS.

29. THE CONTRACTOR SHALL PAVE TRENCHES A MINIMUM OF ONCE PER WEEK. TRENCHES SHALL NOT BE LEFT UNPAVED OVER WEEKENDS OR OBSERVED HOLIDAYS.

30. THE ENDS OF THE NEW PIPE SHALL BE PLUGGED DURING CONSTRUCTION TO PREVENT GROUNDWATER FROM ENTERING.

31. THE CONTRACTOR SHALL USE A QUALIFIED INDEPENDENT COMPANY TO PERFORM ALL PRESSURE TESTING, SAMPLING, AND LAB ANALYSIS.

32. EXCAVATED DIRT SHALL NOT BE LEFT ON SITE OVERNIGHT.

33. CULVERTS AND DITCHES SHALL BE KEPT CLEAR AND RUNNING FREE THROUGHOUT THE PROJECT.

34. ALL WATER MAINS WHICH ARE CUT AND PLUGGED AND ARE ADJACENT TO EXISTING WATER MAINS TO REMAIN IN SERVICE SHALL HAVE A CONCRETE THRUST BLOCK INSTALLED BETWEEN THE EXISTING WATER MAIN REMAINING IN SERVICE AND THE EXISTING WATER MAIN TO BE ABANDONED.

35. CONTRACTOR SHALL LOCATE ALL SANITARY SERVICE CONNECTIONS FOR 300-FT MINIMUM IN ADVANCE OF INSTALLING WATER MAIN TO MITIGATE POTENTIAL CONFLICTS.

36. ALL NEW PIPELINES SHALL BE PRESSURE TESTED, AND DISINFECTED PRIOR TO TRANSFER OF EXISTING SERVICES. ONCE NEW SERVICES ARE ESTABLISHED, CUT AND PLUG ANY ABANDONED LINES.

37. THE CONTRACTOR SHALL COORDINATE ACTIVATION OF THE NEW WATER MAINS WITH THE NEEDHAM WATER AND SEWER DEPARTMENT.

NUMBER	DATE	MADE BY	CHECKED BY	DESCRIPTION

REVISIONS

DRAWN BY: JA

DESIGNED BY: MRH

CHECKED BY: RTM

COMMONWEALTH OF MASSACHUSETTS MICHAEL R HORNER CIVIL No. 45185 REGISTERED PROFESSIONAL ENGINEER 7/19/13

BETA Group, Inc.
Engineers•Planners•Landscape Architects•Scientists
315 Norwood Park South
Norwood, MA 02062
781.255.1982
email: BETA@BETA-inc.com

SCALE: AS SHOWN

UNLESS OTHERWISE NOTED OR CHANGED BY REPRODUCTION

Town of Needham, Massachusetts

16" Water Main Installation

LEGEND & GENERAL NOTES

JOB 4376

PLOT DATE: Jul. 01, 2013 2:16pm

ISSUE DATE 08/23/12

SHEET **2**

K:\Needham, MA\4376 - 16 Water Main 2013\Drawing Files\Plan Set\4376 Legend.dwg

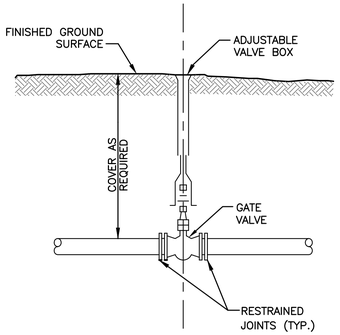

SECTION

TYPICAL GATE VALVE (TYP.)

NOT TO SCALE

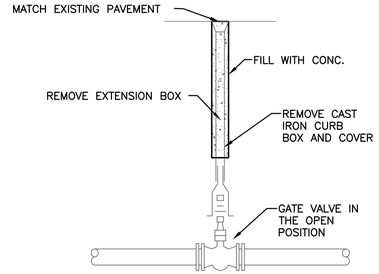

TYPICAL ABANDONED GATE VALVE DETAIL

NOT TO SCALE

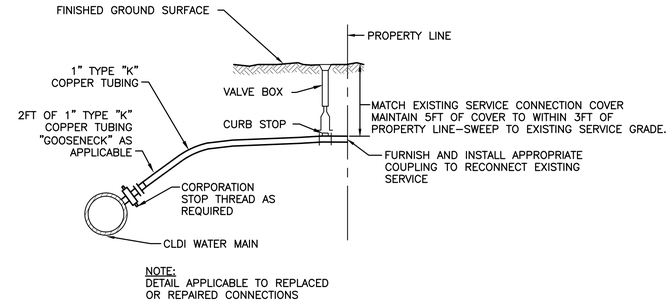

NOTE:
DETAIL APPLICABLE TO REPLACED OR REPAIRED CONNECTIONS

TYPICAL SERVICE CONNECTION (TYP.)

NOT TO SCALE

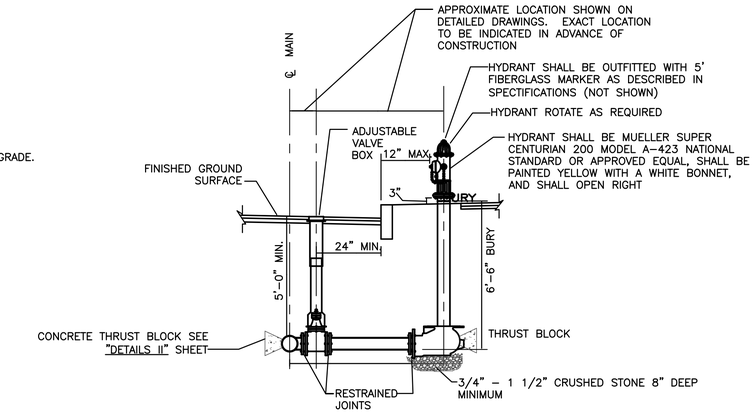

SECTION

NOTE: JOINT TYPE AS SPECIFIED

* SEE TABLE ON THRUST BLOCK BEARING AREAS ON "DETAILS II" SHEET FOR THE AREA OF CONCRETE REQUIRED. FLANGED END GATE VALVE ATTACHED TO FLANGED TEE OUTLET IS PERMITTED.

TYPICAL HYDRANT ASSEMBLY DETAIL

NOT TO SCALE

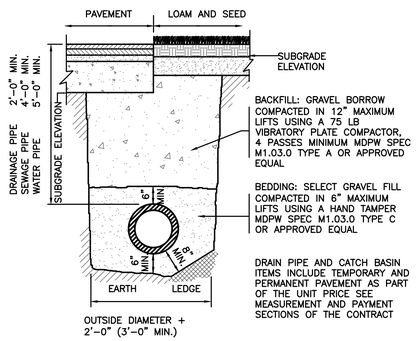

TYPICAL TRENCH DETAIL

NOT TO SCALE

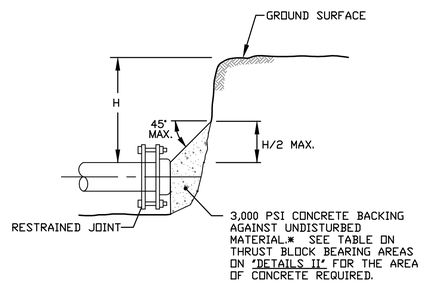

CAP WITH THRUST BLOCK

NOT TO SCALE

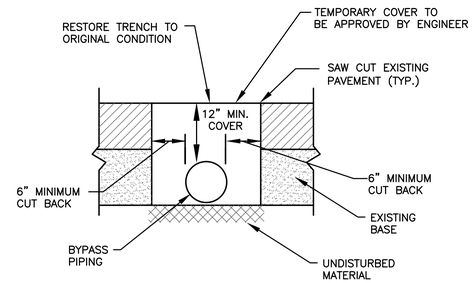

BYPASS PIPING TRENCH DETAIL

NOT TO SCALE

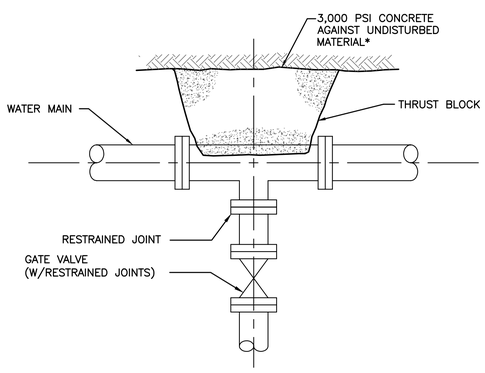

PLAN

* SEE TABLE ON THRUST BLOCK BEARING AREAS ON "DETAILS II" SHEET FOR THE AREA OF CONCRETE REQUIRED.

** HYDRANTS, VALVES AND TEES SHALL USE BOTH MEGALUGS AND THRUST RESTRAINTS

TYPICAL RESTRAINED GASKET JOINT VALVE

NOT TO SCALE

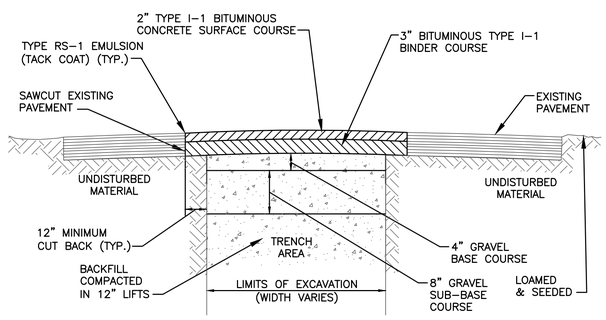

NOTES
1. MINIMUM PAVEMENT THICKNESS TO BE 2 INCHES.
2. MAXIMUM PAVEMENT THICKNESS PER COURSE NOT TO EXCEED 3 INCHES.
3. CONTRACTOR TO VARY PAVEMENT THICKNESS TO MAINTAIN A MINIMUM CROSS SECTIONAL SLOPE EQUALING 0.02 FT/FT OR 2%.

BITUMINOUS CONCRETE TRENCH WIDTH PAVEMENT

NOT TO SCALE

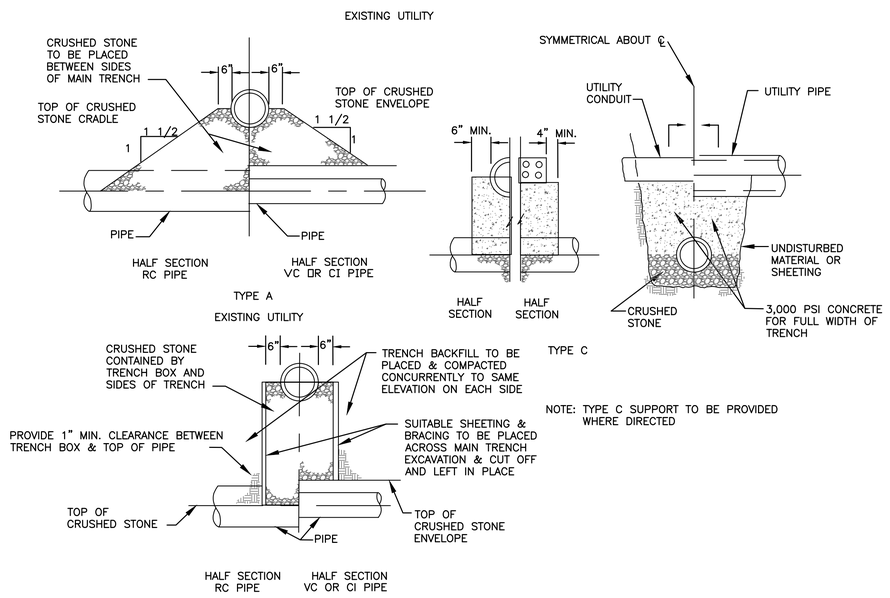

NOTE: TYPE C SUPPORT TO BE PROVIDED WHERE DIRECTED

TYPICAL UTILITY SUPPORT DETAIL

NOT TO SCALE

NUMBER	DATE	MADE BY	CHECKED BY	DESCRIPTION

REVISIONS

DRAWN BY: JA
DESIGNED BY: MRH
CHECKED BY: RTM

COMMONWEALTH OF MASSACHUSETTS
MICHAEL R. HORNIG
No. 45185
REGISTERED PROFESSIONAL ENGINEER

BETA Group, Inc.
Engineers•Planners•Landscape Architects•Scientists
315 Norwood Park South
Norwood, MA 02062
781.255.1982
email: BETA@BETA-inc.com

SCALE: AS SHOWN

UNLESS OTHERWISE NOTED OR CHANGED BY PERPONSITION

Town of Needham, Massachusetts
16" Water Main Installation

DETAILS I

JOB 4376
PLOT DATE: Jul. 01, 2013 2:16pm
ISSUE DATE 08/23/12
SHEET 3

C:\Needham, MA\4376 – 16 Water Main 2013\Drawing Files\Plan Set\4376 Details.dwg

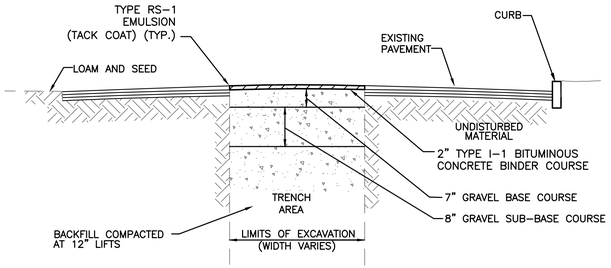

NOTES

1. MINIMUM PAVEMENT THICKNESS TO BE 2-INCHES.
2. MAXIMUM PAVEMENT THICKNESS PER COURSE NOT TO EXCEED 3-INCHES.
3. CONTRACTOR TO VARY PAVEMENT THICKNESS TO MAINTAIN A MINIMUM CROSS SECTIONAL SLOPE EQUALING 0.02 FT/FT OR %.

TEMPORARY BITUMINOUS CONCRETE TRENCH WIDTH PAVEMENT

NOT TO SCALE

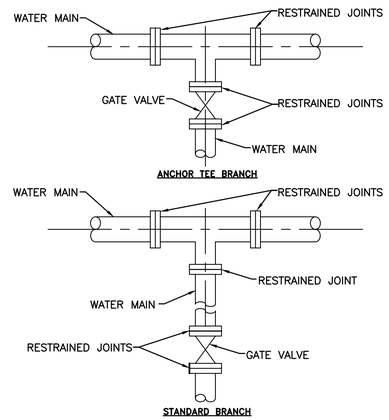

TYPICAL DUCTILE IRON WATER MAIN BRANCHES

NOT TO SCALE

* HYDRANTS, VALVES AND TEES SHALL USE BOTH MEGALUGS AND THRUST RESTRAINTS

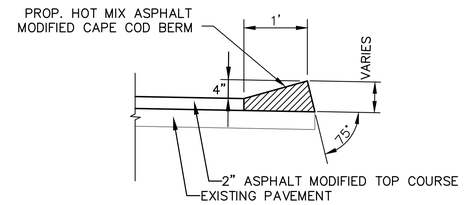

DETAIL FOR MODIFIED CAPE COD BERM

NOT TO SCALE

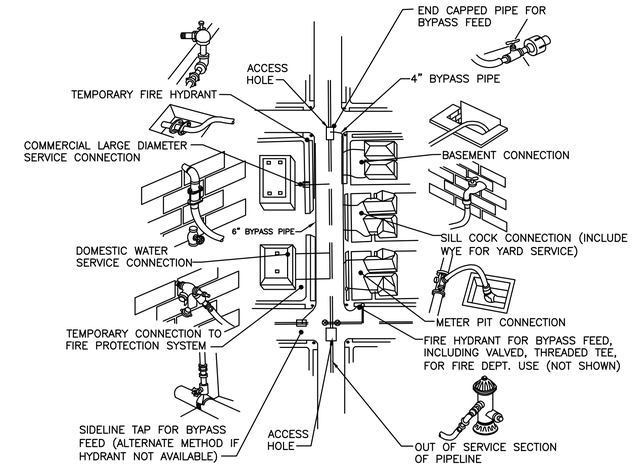

TYPICAL BYPASS PIPING (IF NECESSARY)

NOT TO SCALE

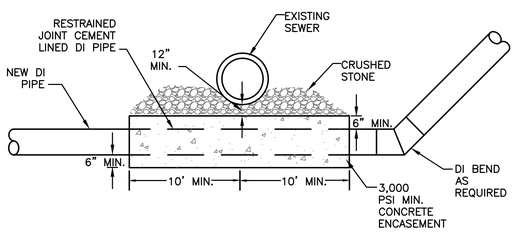

RELOCATION OF WATER UNDER SEWER

NTS

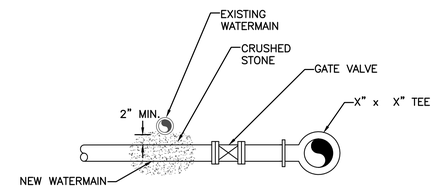

TYPICAL CROSSING OF EXISTING WATER MAIN

NOT TO SCALE

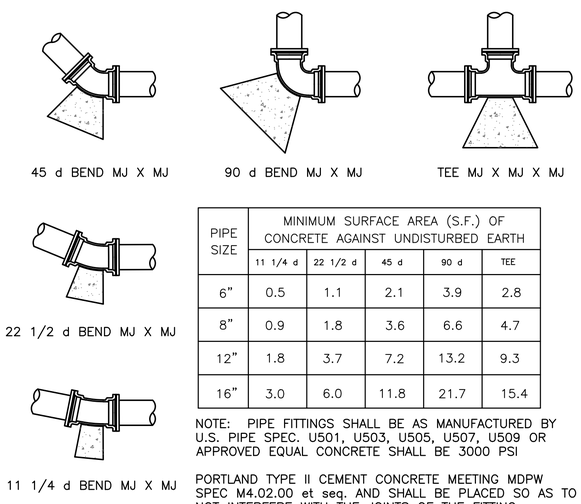

PIPE SIZE	MINIMUM SURFACE AREA (S.F.) OF CONCRETE AGAINST UNDISTURBED EARTH				
	11 1/4 d	22 1/2 d	45 d	90 d	TEE
6"	0.5	1.1	2.1	3.9	2.8
8"	0.9	1.8	3.6	6.6	4.7
12"	1.8	3.7	7.2	13.2	9.3
16"	3.0	6.0	11.8	21.7	15.4

NOTE: PIPE FITTINGS SHALL BE AS MANUFACTURED BY U.S. PIPE SPEC. U501, U503, U505, U507, U509 OR APPROVED EQUAL CONCRETE SHALL BE 3000 PSI

PORTLAND TYPE II CEMENT CONCRETE MEETING MDPW SPEC M4.02.00 et seq. AND SHALL BE PLACED SO AS TO NOT INTERFERE WITH THE JOINTS OF THE FITTING

THRUST BLOCK BEARING AREA TABLE FOR WATER MAIN

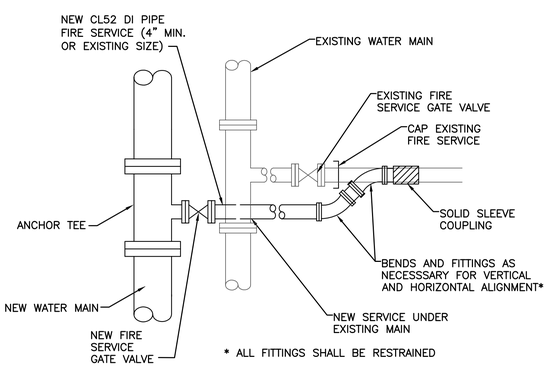

* ALL FITTINGS SHALL BE RESTRAINED

TYPICAL FIRE SERVICE CONNECTION

NOT TO SCALE

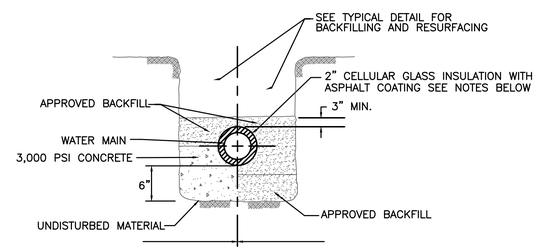

INSULATION NOTES:

1. CELLULAR GLASS INSULATION SHALL BE AS MANUFACTURED BY OWENS-CORNING FIBERGLASS CORP., DOW CHEMICAL CO. , JOHNS-MANVILLE CORP., OR AN ACCEPTABLE EQUIVALENT PRODUCT.
2. INSULATION SHALL BE SECURED IN PLACE WITH TYPE 304 S.S. BANDS 9" O.C. (MIN. SIZE 3/8" x 0.15"). FLAPS AT LONGITUDINAL AND BUTT JOINTS OF FACTORY-WRAPPED (FIBERGLASS FABRIC WRAPPING) INSULATION SHALL BE CEMENTED IN PLACE WITH WATERPROOF CEMENT.
3. A FIBERATED ASPHALT COATING SHALL BE APPLIED TO THE FIBERGLASS FABRIC WRAPPED INSULATION TO A DRY THICKNESS OF 1/8". COATING SHALL BE INSULMATIC'S 4010, CARY INSULATION SEAL, GILSONMATIC, OR AN ACCEPTABLE EQUIVALENT PRODUCT.

INSULATED WATER MAIN TRENCH SECTION

NOT TO SCALE

LENGTH OF RESTRAINED LINE (FT)*

8-INCH

END	90° BEND	45° BEND	22.5° BEND	8X6 RED.
54 FT	57 FT	17 FT	4 FT	22 FT

12-INCH

END	90° BEND	45° BEND	22.5° BEND	12X8 RED.
82 FT	82 FT	24 FT	6 FT	62 FT

16-INCH

END	90° BEND	45° BEND	22.5° BEND	16X12 RED.
112 FT	112 FT	33 FT	9 FT	63 FT

*EACH SIDE OF JOINT

RESTRAINED JOINT LENGTHS FOR DI CL52 WATER MAIN

NUMBER	DATE	MADE BY	CHECKED BY	DESCRIPTION

REVISIONS

DRAWN BY: JA

DESIGNED BY: MRH

CHECKED BY: RTM

COMMONWEALTH OF MASSACHUSETTS
MICHAEL R. HOSKING
CIVIL
No. 49185
REGISTERED PROFESSIONAL ENGINEER

BETA Group, Inc.
Engineers•Planners•Landscape Architects•Scientists
315 Norwood Park South
Norwood, MA 02062
781.255.1982
email: BETA@BETA-inc.com

SCALE: AS SHOWN

UNLESS OTHERWISE NOTED OR CHANGED BY REDRAWING

Town of Needham, Massachusetts
16" Water Main Installation
DETAILS II

JOB 4376
PLOT DATE: Jul. 01, 2013 2:17pm
ISSUE DATE 08/23/12
SHEET 4

C:\Needham, MA\4376 - 16 Water Main 2013\Drawing Files\Plan Set\4376 Details.dwg

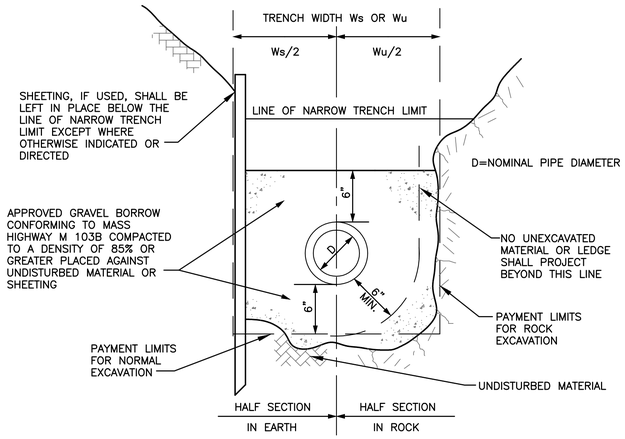

BACKFILL MATERIAL AND METHODS FOR STATE ROADS SHALL MEET ALL OF THE REQUIREMENTS OF THE MASSACHUSETTS HIGHWAY DEPARTMENT PERMIT

WATER MAIN TRENCH SECTION FOR DUCTILE IRON PRESSURE PIPE (TYP.)

NOT TO SCALE

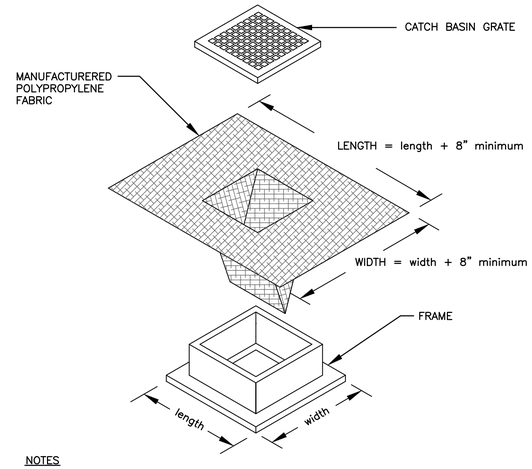

NOTES

1. LENGTH AND WIDTH OF POLYPROPYLENE FABRIC MUST EXCEED EXISTING CATCH BASIN FRAME DIMENSIONS BY A MINIMUM OF 8".
2. REMOVE CATCH BASIN GRATE AND INSTALL POLYPROPYLENE FABRIC OVER CATCH BASIN FRAME. REPLACE CATCH BASIN GRATE TO SECURE POLYPROPYLENE FABRIC IN PLACE.

CATCH BASIN EROSION CONTROL PROTECTION (TYP.)

NOT TO SCALE

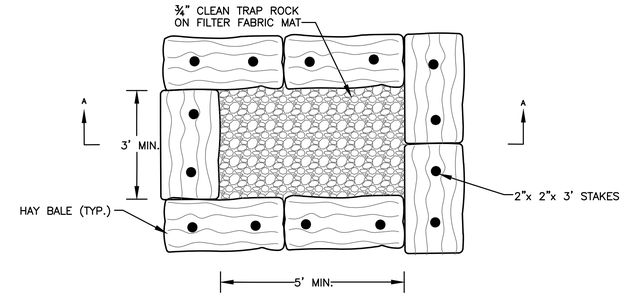

PLAN

NOTE: ALL DEWATERING DISCHARGES SHALL BE THROUGH SEDIMENT CONTROL TRAPS, CONTRACTOR SHALL MAINTAIN AND CLEAN TRAP AS REQUIRED.

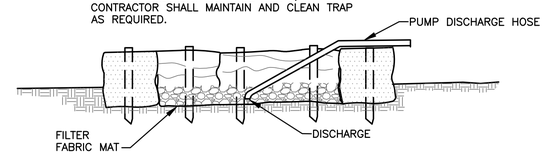

SECTION

SEDIMENT CONTROL TRAP

NOT TO SCALE

NUMBER	DATE	MADE BY	CHECKED BY	DESCRIPTION

REVISIONS

DRAWN BY: JA

DESIGNED BY: MRH

CHECKED BY: RTM

COMMONWEALTH OF MASSACHUSETTS MICHAEL R. HOGUE CIVIL No. 45105 REGISTERED PROFESSIONAL ENGINEER 7/01/13

BETA Group, Inc.
Engineers•Planners•Landscape Architects•Scientists
315 Norwood Park South
Norwood, MA 02062
781.255.1982
email: BETA@BETA-inc.com

SCALE: AS SHOWN

UNLESS OTHERWISE NOTED OR CHANGED BY REPRODUCTION

Town of Needham, Massachusetts

16" Water Main Installation

DETAILS III

JOB 4376

PLOT DATE: Jul. 01, 2013 2:17pm

ISSUE DATE 08/23/12

SHEET 5

K:\Needham, MA\4376 – 16 Water Main 2013\Drawing Files\Plan Set\4376 Details.dwg

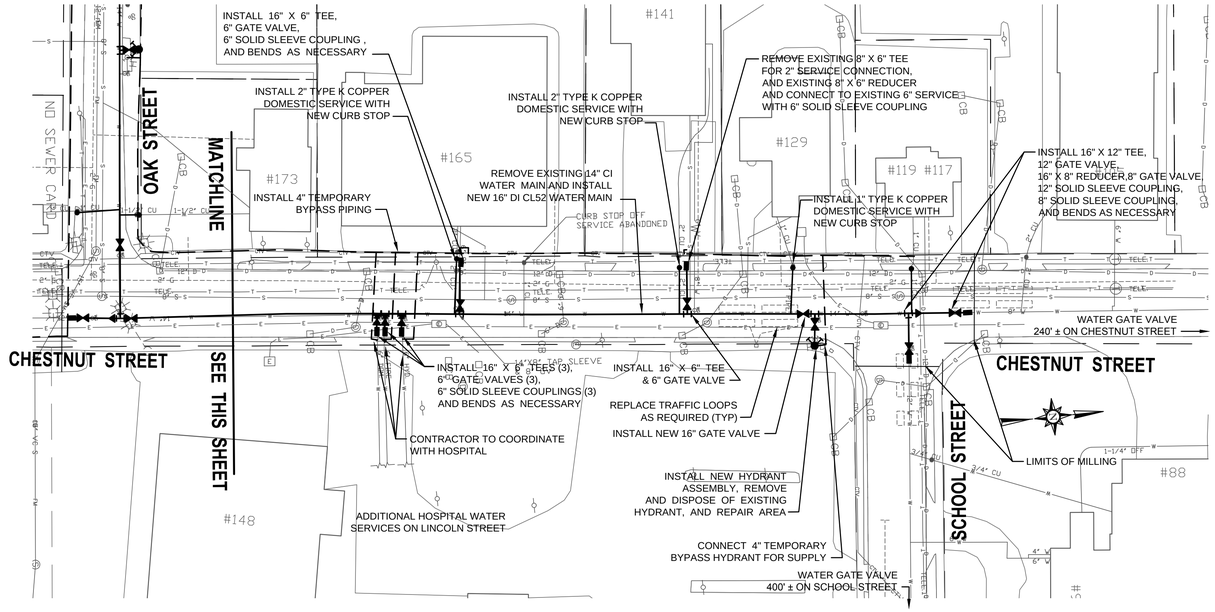

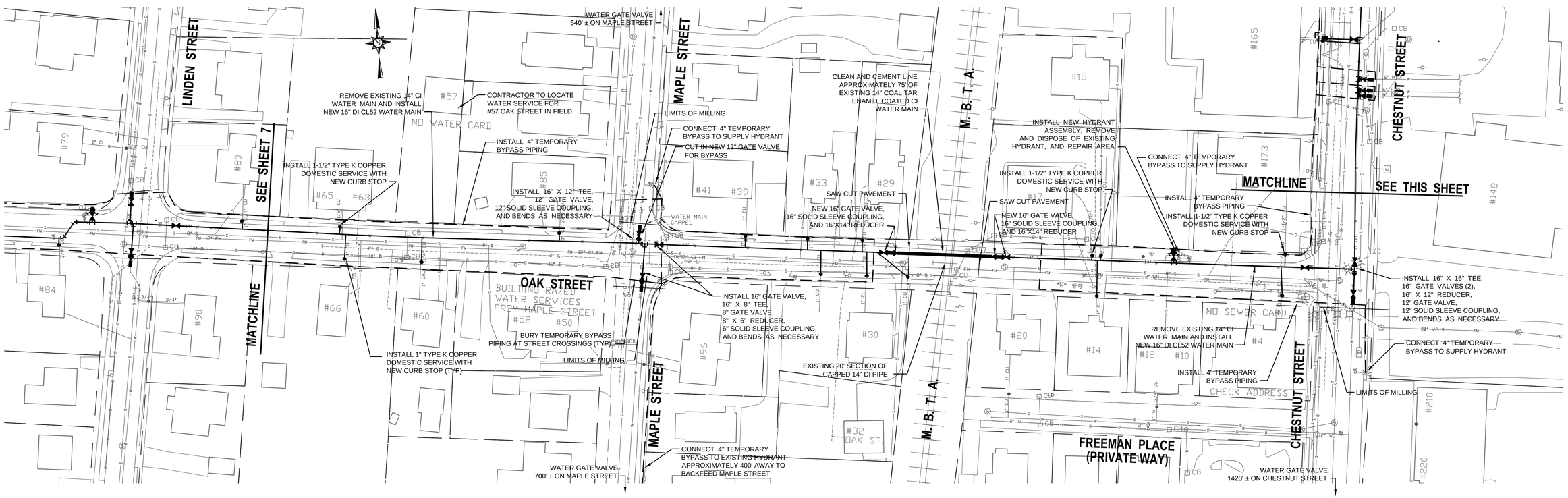

NUMBER	DATE	MADE BY	CHECKED BY	DESCRIPTION

REVISIONS

DRAWN BY: JA

DESIGNED BY: MRH

CHECKED BY: RTM

COMMONWEALTH OF MASSACHUSETTS
MICHAEL R. HORNIG
CIVIL
No. 45185
REGISTERED PROFESSIONAL ENGINEER

BETA Group, Inc.
Engineers•Planners•Landscape Architects•Scientists
315 Norwood Park South
Norwood, MA 02062
781.255.1982
email: BETA@BETA-inc.com

SCALE:
40 0 40 80
SCALE IN FEET: 1"=40'

UNLESS OTHERWISE NOTED OR CHANGED BY REPRODUCTION

Town of Needham, Massachusetts

16" Water Main Installation

CHESTNUT STREET

JOB 4376

PLOT DATE: Jul. 01, 2013 2:17pm

ISSUE DATE 08/23/12

SHEET 6

K:\Needham, MA\4376 – 16 Water Main 2013\Drawing Files\Plan Set\4376 16 Inch Water Main Replacement.dwg

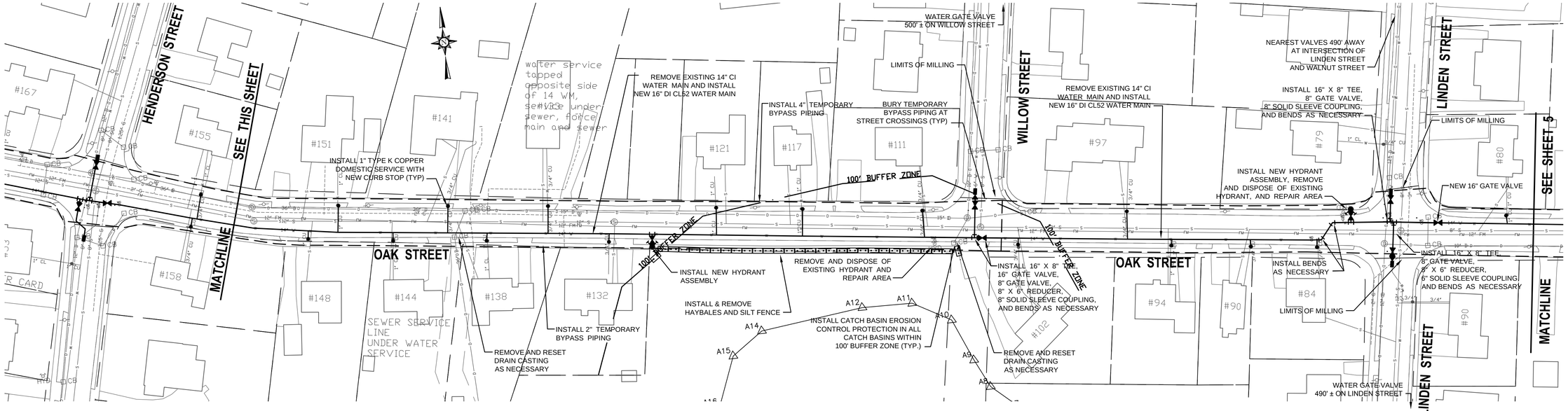

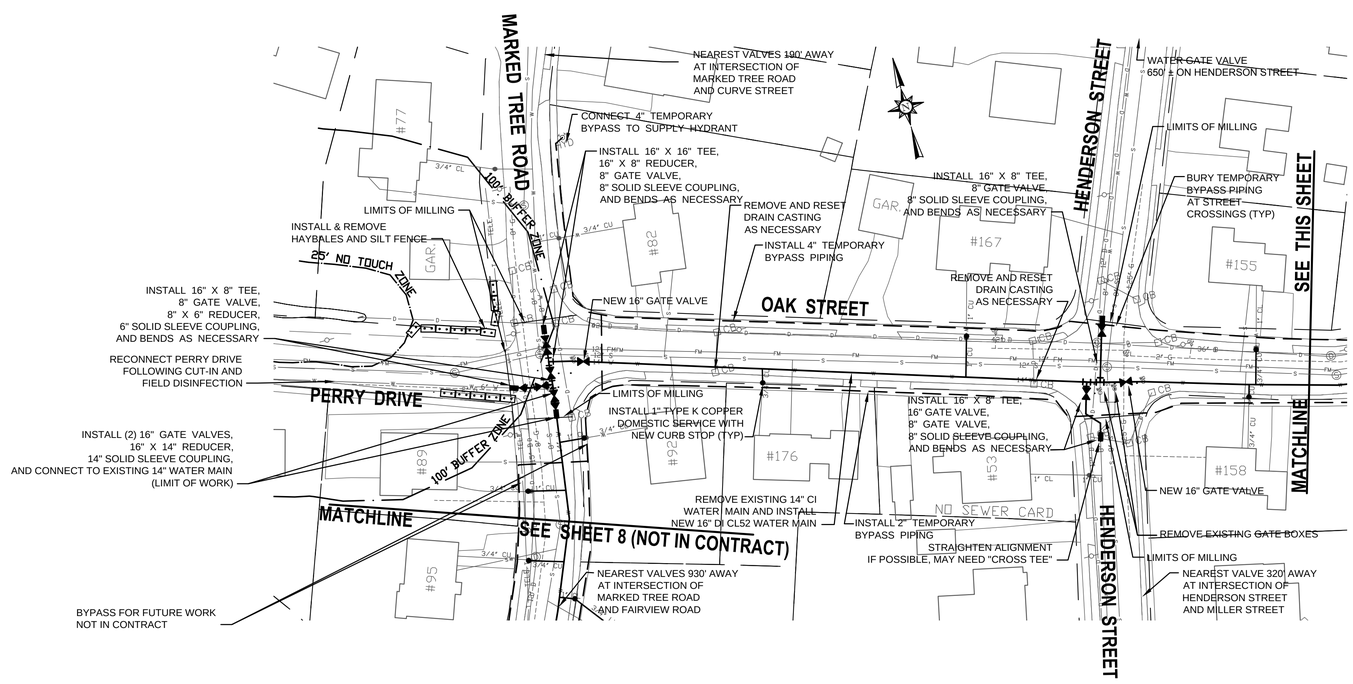

NUMBER	DATE	MADE BY	CHECKED BY	DESCRIPTION

REVISIONS

DRAWN BY: JA

DESIGNED BY: MRH

CHECKED BY: RTM

COMMONWEALTH OF MASSACHUSETTS
MICHAEL R. HORNIG
CIVIL
NO. 45189
REGISTERED PROFESSIONAL ENGINEER

BETA Group, Inc.
Engineers•Planners•Landscape Architects•Scientists

315 Norwood Park South
Norwood, MA 02062
781.255.1982
email: BETA@BETA-inc.com

SCALE:
40 0 40 80
SCALE IN FEET: 1"=40'

UNLESS OTHERWISE NOTED OR CHANGED BY REPRODUCTION

Town of Needham, Massachusetts
16" Water Main Installation
OAK STREET

JOB 4376
PLOT DATE: Jul. 01, 2013 2:18pm
ISSUE DATE 08/23/12
SHEET 7

K:\Needham, MA\4376 – 16 Water Main 2013\Drawing Files\Plan Set\4376 16 Inch Water Main Replacement.dwg