\\vhb\gbl\proj\Wat-LD\14628.00\cad\dt\140 Kendrick Street\Plan Set\1462800_GDE.dwg

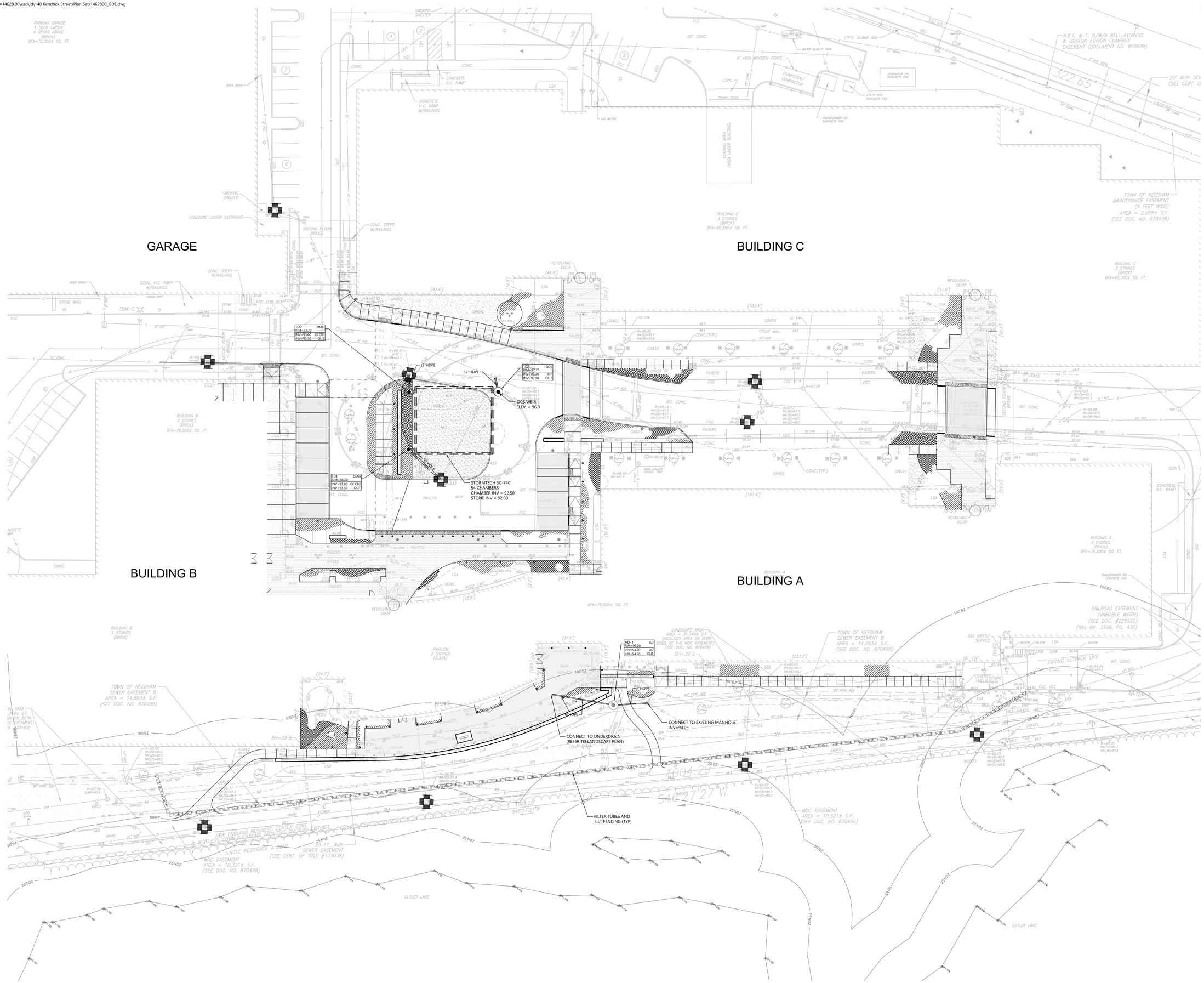

vhb.com

101 Walnut Street
PO Box 9151
Watertown, MA 02471
617.924.1770

0 10 20 40 Feet

140 Kendrick Street

Needham, Massachusetts

No.	Revision	Date	Apprvd.

Designed by | Checked by

Issued for: Notice of Intent

Date: 9/23/2020

Not Approved for Construction

Drawing Title: Grading and Drainage Plan

Drawing Number: C-1

Sheet 1 of 2

Project Number: 15060.00

COMMONWEALTH OF MASSACHUSETTS
NICHOLAS J. SKIOLY
CIVIL
No. 52677
REGISTERED PROFESSIONAL ENGINEER

Saved Wednesday, September 23, 2020 10:08:59 AM NSKIOLY Plotted Wednesday, September 23, 2020 10:39:18 AM Skioly, Nicholas

\\vhb\gbl\proj\Wat-LD\14628.00\cad\ld\140 Kendrick Street\Plan Set\1462800_DT.dwg

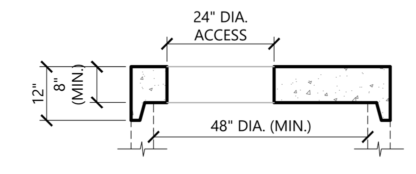

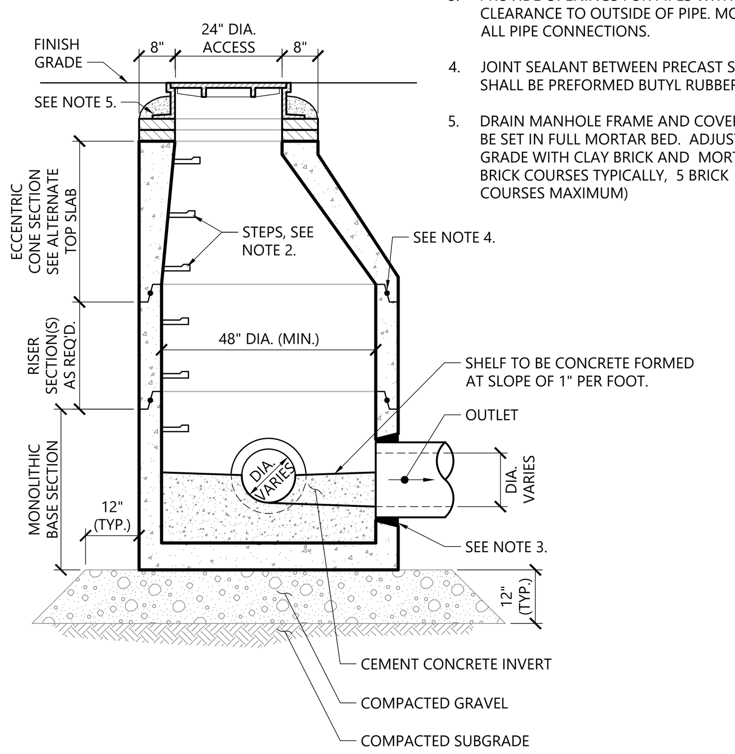

NOTES

1. ALL SECTIONS SHALL BE DESIGNED FOR HS-20 LOADING. DIAMETER OF STRUCTURES SHALL BE COORDINATED WITH PIPE CONFIGURATIONS.
2. COPOLYMER MANHOLE STEPS SHALL BE INSTALLED AT 12" O.C. FOR THE FULL DEPTH OF THE STRUCTURE.
3. PROVIDE OPENINGS FOR PIPES WITH 2" MAX. CLEARANCE TO OUTSIDE OF PIPE. MORTAR ALL PIPE CONNECTIONS.
4. JOINT SEALANT BETWEEN PRECAST SECTIONS SHALL BE PREFORMED BUTYL RUBBER.
5. DRAIN MANHOLE FRAME AND COVER SHALL BE SET IN FULL MORTAR BED. ADJUST TO GRADE WITH CLAY BRICK AND MORTAR (2 BRICK COURSES TYPICALLY, 5 BRICK COURSES MAXIMUM)

Drain Manhole (DMH)

N.T.S. Source: VHB 1/16 LD_115

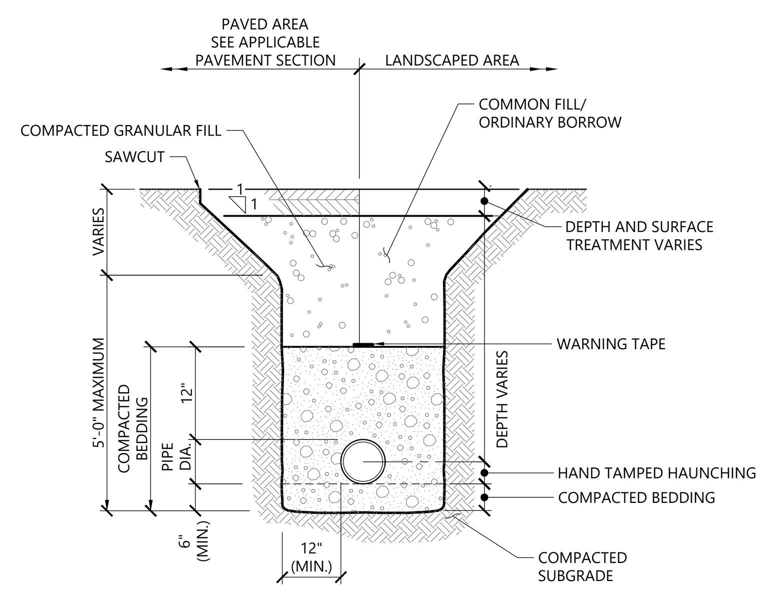

NOTES

1. WHERE UTILITY TRENCHES ARE CONSTRUCTED THROUGH DETENTION BASIN BERMS OR OTHER SUCH SPECIAL SECTIONS, PLACE TRENCH BACKFILL WITH MATERIALS SIMILAR TO THE SPECIAL SECTION REQUIREMENTS.
2. USE METALLIC TRACING/WARNING TAPE OVER ALL PIPES.

Utility Trench

N.T.S. Source: VHB 1/16 LD_300

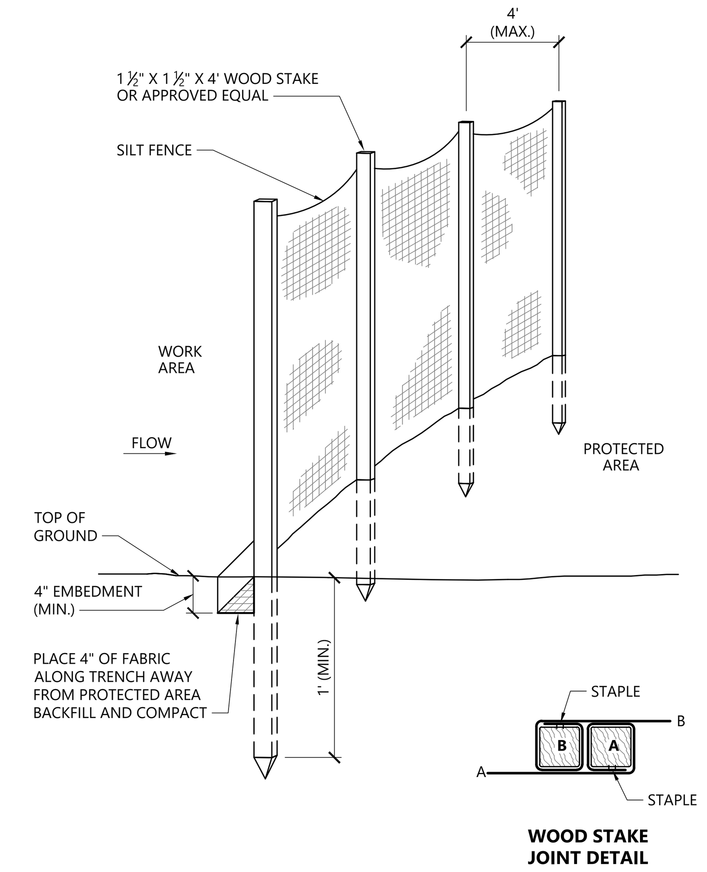

Silt Fence Barrier

N.T.S. Source: VHB 1/16 LD_650

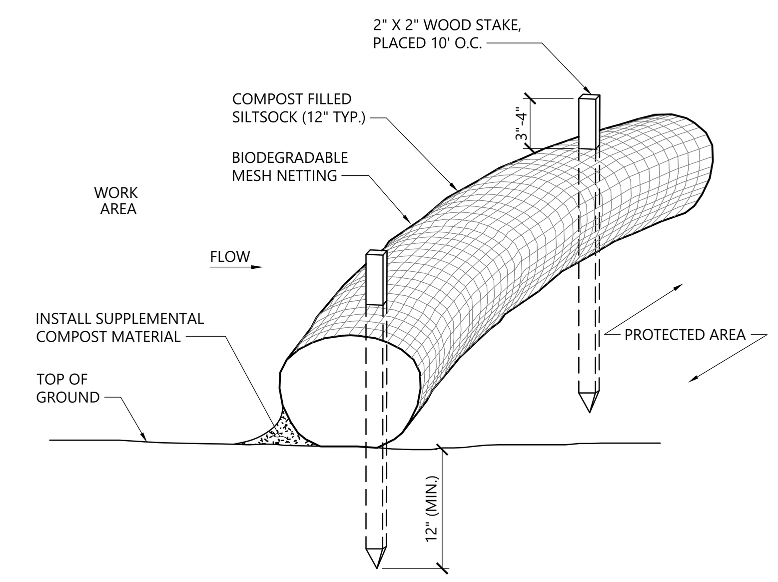

NOTES

1. SILTSOCK SHALL BE FILTREXX SILTSOXX, OR APPROVED EQUAL.
2. SILTSOCKS SHALL OVERLAP A MINIMUM OF 12 INCHES.
3. SILTSOCK SHALL BE INSPECTED PERIODICALLY AND AFTER ALL STORM EVENTS, AND REPAIR OR REPLACEMENT SHALL BE PERFORMED PROMPTLY AS NEEDED.
4. COMPOST MATERIAL SHALL BE DISPERSED ON SITE, AS DETERMINED BY THE ENGINEER.
5. IF NON BIODEGRADABLE NETTING IS USED THE NETTING SHALL BE COLLECTED AND DISPOSED OF OFFSITE.

Siltsock - Erosion Control Barrier

N.T.S. Source: VHB 1/16 LD_658

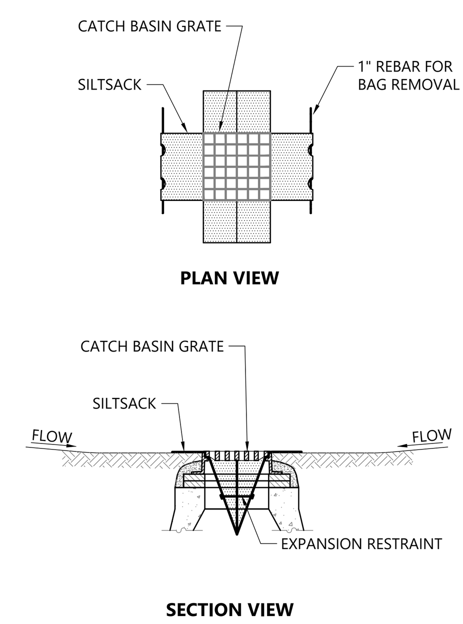

NOTES

1. INSTALL SILTSACK IN ALL CATCH BASINS WHERE INDICATED ON THE PLAN BEFORE COMMENCING WORK OR IN PAVED AREAS AFTER BINDER COURSE IS PLACED AND HAY BALES HAVE BEEN REMOVED.
2. GRATE TO BE PLACED OVER SILTSACK.
3. SILTSACK SHALL BE INSPECTED PERIODICALLY AND AFTER ALL STORM EVENTS AND CLEANING OR REPLACEMENT SHALL BE PERFORMED PROMPTLY AS NEEDED. MAINTAIN UNTIL UPSTREAM AREAS HAVE BEEN PERMANENTLY STABILIZED

Siltsack Sediment Trap

N.T.S. Source: VHB 1/16 LD_674

ACCEPTABLE FILL MATERIALS: STORMTECH SC-740 CHAMBER SYSTEMS

	MATERIAL LOCATION	DESCRIPTION	AASHTO MATERIAL CLASSIFICATIONS	COMPACTION / DENSITY REQUIREMENT
D	**FINAL FILL:** FILL MATERIAL FOR LAYER 'D' STARTS FROM THE TOP OF THE 'C' LAYER TO THE BOTTOM OF FLEXIBLE PAVEMENT OR UNPAVED FINISHED GRADE ABOVE. NOTE THAT PAVEMENT SUBBASE MAY BE PART OF THE 'D' LAYER	ANY SOIL/ROCK MATERIALS, NATIVE SOILS, OR PER ENGINEER'S PLANS. CHECK PLANS FOR PAVEMENT SUBGRADE REQUIREMENTS.	N/A	PREPARE PER SITE DESIGN ENGINEER'S PLANS. PAVED INSTALLATIONS MAY HAVE STRINGENT MATERIAL AND PREPARATION REQUIREMENTS.
C	**INITIAL FILL:** FILL MATERIAL FOR LAYER 'C' STARTS FROM THE TOP OF THE EMBEDMENT STONE ('B' LAYER) TO 18" (450 mm) ABOVE THE TOP OF THE CHAMBER. NOTE THAT PAVEMENT SUBBASE MAY BE A PART OF THE 'C' LAYER.	GRANULAR WELL-GRADED SOIL/AGGREGATE MIXTURES, <35% FINES OR PROCESSED AGGREGATE. MOST PAVEMENT SUBBASE MATERIALS CAN BE USED IN LIEU OF THIS LAYER.	AASHTO M145[1] A-1, A-2-4, A-3 OR AASHTO M43[1] 3, 357, 4, 467, 5, 56, 57, 6, 67, 68, 7, 78, 8, 89, 9, 10	BEGIN COMPACTIONS AFTER 12" (300 mm) OF MATERIAL OVER THE CHAMBERS IS REACHED. COMPACT ADDITIONAL LAYERS IN 6" (150 mm) MAX LIFTS TO A MIN. 95% PROCTOR DENSITY FOR WELL GRADED MATERIAL AND 95% RELATIVE DENSITY FOR PROCESSED AGGREGATE MATERIALS. ROLLER GROSS VEHICLE WEIGHT NOT TO EXCEED 12,000 lbs (53 kN). DYNAMIC FORCE NOT TO EXCEED 20,000 lbs (89 kN).
B	**EMBEDMENT STONE:** FILL SURROUNDING THE CHAMBERS FROM THE FOUNDATION STONE ('A' LAYER) TO THE 'C' LAYER ABOVE.	CLEAN, CRUSHED, ANGULAR STONE	AASHTO M43[1] 3, 357, 4, 467, 5, 56, 57	NO COMPACTION REQUIRED.
A	**FOUNDATION STONE:** FILL BELOW CHAMBERS FROM THE SUBGRADE UP TO THE FOOT (BOTTOM) OF THE CHAMBER.	CLEAN, CRUSHED, ANGULAR STONE	AASHTO M43[1] 3, 357, 4, 467, 5, 56, 57	PLATE COMPACT OR ROLL TO ACHIEVE A FLAT SURFACE. [2,3]

PLEASE NOTE:
1. THE LISTED AASHTO DESIGNATIONS ARE FOR GRADATIONS ONLY. THE STONE MUST ALSO BE CLEAN, CRUSHED, ANGULAR. FOR EXAMPLE, A SPECIFICATION FOR #4 STONE WOULD STATE: "CLEAN, CRUSHED, ANGULAR NO. 4 (AASHTO M43) STONE".
2. STORMTECH COMPACTION REQUIREMENTS ARE MET FOR 'A' LOCATION MATERIALS WHEN PLACED AND COMPACTED IN 6" (150 mm) (MAX) LIFTS USING TWO FULL COVERAGES WITH A VIBRATORY COMPACTOR.
3. WHERE INFILTRATION SURFACES MAY BE COMPROMISED BY COMPACTION, FOR STANDARD DESIGN LOAD CONDITIONS, A FLAT SURFACE MAY BE ACHIEVED BY RAKING OR DRAGGING WITHOUT COMPACTION EQUIPMENT. FOR SPECIAL LOAD DESIGNS, CONTACT STORMTECH FOR COMPACTION REQUIREMENTS.

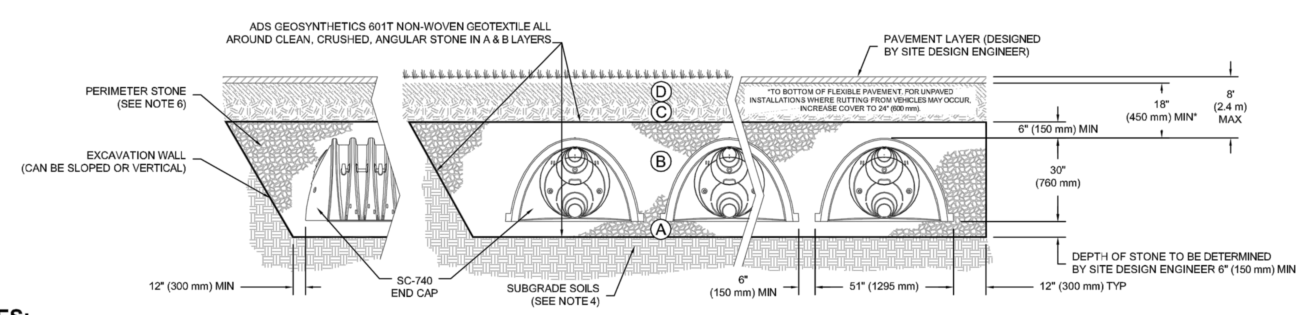

NOTES:

1. SC-740 CHAMBERS SHALL CONFORM TO THE REQUIREMENTS OF ASTM F2418 "STANDARD SPECIFICATION FOR POLYPROPYLENE (PP) CORRUGATED WALL STORMWATER COLLECTION CHAMBERS", OR ASTM F2922 "STANDARD SPECIFICATION FOR POLYETHYLENE (PE) CORRUGATED WALL STORMWATER COLLECTION CHAMBERS".
2. SC-740 CHAMBERS SHALL BE DESIGNED IN ACCORDANCE WITH ASTM F2787 "STANDARD PRACTICE FOR STRUCTURAL DESIGN OF THERMOPLASTIC CORRUGATED WALL STORMWATER COLLECTION CHAMBERS".
3. "ACCEPTABLE FILL MATERIALS" TABLE ABOVE PROVIDES MATERIAL LOCATIONS, DESCRIPTIONS, GRADATIONS, AND COMPACTION REQUIREMENTS FOR FOUNDATION, EMBEDMENT, AND FILL MATERIALS.
4. THE SITE DESIGN ENGINEER IS RESPONSIBLE FOR ASSESSING THE BEARING RESISTANCE (ALLOWABLE BEARING CAPACITY) OF THE SUBGRADE SOILS AND THE DEPTH OF FOUNDATION STONE WITH CONSIDERATION FOR THE RANGE OF EXPECTED SOIL MOISTURE CONDITIONS.
5. PERIMETER STONE MUST BE EXTENDED HORIZONTALLY TO THE EXCAVATION WALL FOR BOTH VERTICAL AND SLOPED EXCAVATION WALLS.
6. ONCE LAYER 'C' IS PLACED, ANY SOIL/MATERIAL CAN BE PLACED IN LAYER 'D' UP TO THE FINISHED GRADE. MOST PAVEMENT SUBBASE SOILS CAN BE USED TO REPLACE THE MATERIAL REQUIREMENTS OF LAYER 'C' OR 'D' AT THE SITE DESIGN ENGINEER'S DISCRETION.

SC-740 STANDARD CROSS SECTION
DATE: 11/18/14 DRAWN: JLM
PROJECT #: CHECKED: JLM

REV	DRW	CHK	DESCRIPTION
01/19/16	JLM	JLM	UPDATE

StormTech® Detention · Retention · Water Quality
70 INWOOD ROAD, SUITE 3 | ROCKY HILL | CT | 06067
860-529-8188 | 888-892-2694 | WWW.STORMTECH.COM

ADS® ADVANCED DRAINAGE SYSTEMS, INC.
4640 TRUEMAN BLVD
HILLIARD, OH 43026
1-800-733-7473

THIS DRAWING HAS BEEN PREPARED BASED ON INFORMATION PROVIDED TO ADS UNDER THE DIRECTION OF THE SITE DESIGN ENGINEER OR OTHER PROJECT REPRESENTATIVE. THE SITE DESIGN ENGINEER SHALL REVIEW THIS DRAWING PRIOR TO CONSTRUCTION. IT IS THE ULTIMATE RESPONSIBILITY OF THE SITE DESIGN ENGINEER TO ENSURE THAT THE PRODUCT(S) DEPICTED AND ALL ASSOCIATED DETAILS MEET ALL APPLICABLE LAWS, REGULATIONS, AND PROJECT REQUIREMENTS.

SHEET 1 OF 1

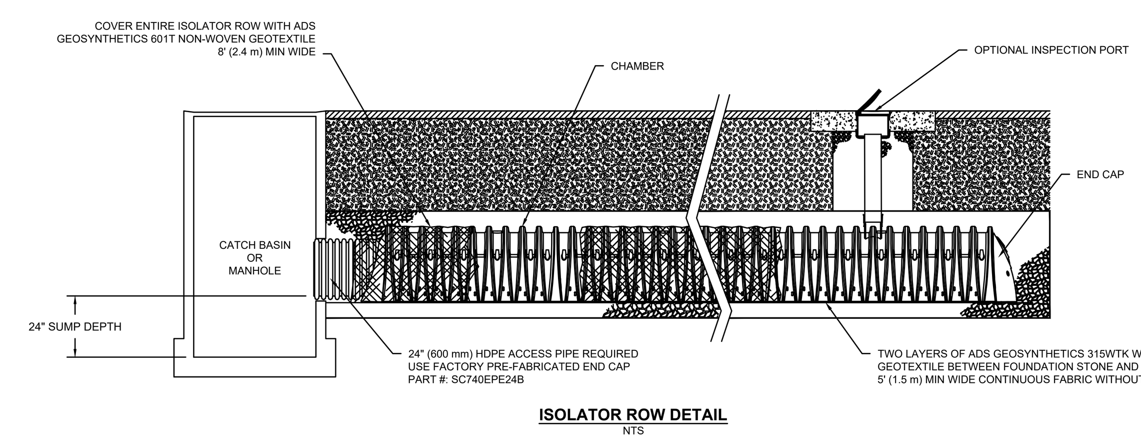

ISOLATOR ROW DETAIL
NTS

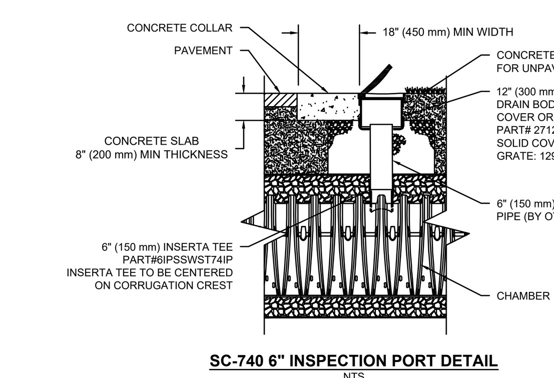

SC-740 6" INSPECTION PORT DETAIL
NTS

Isolator Row Profile

N.T.S. Source: StormTech

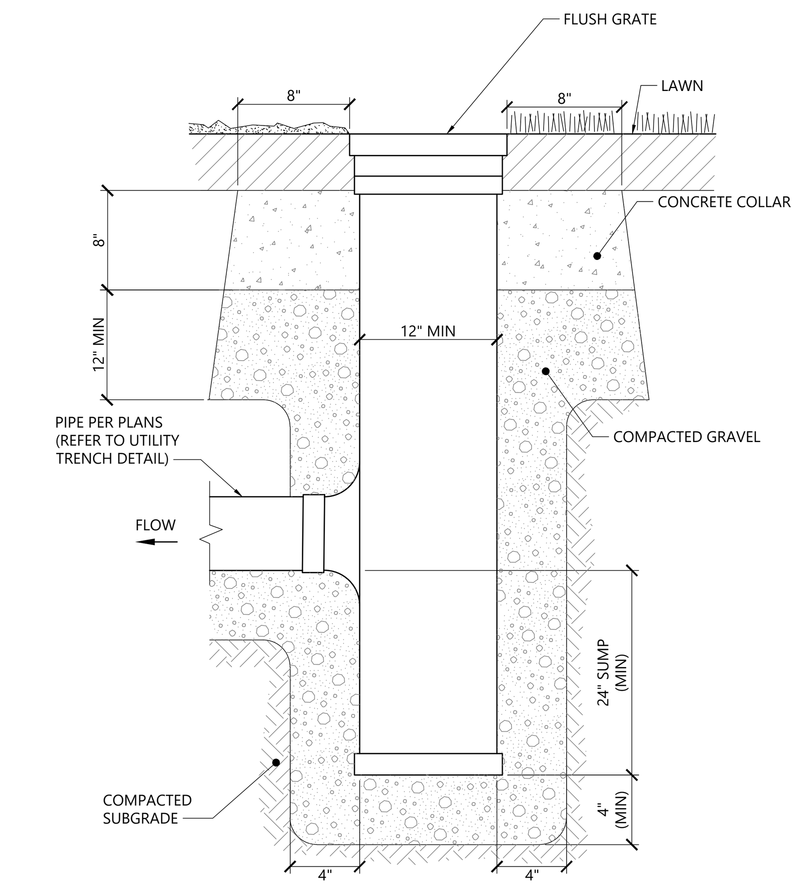

NOTES:

1. LANDSCAPE DRAINS SHALL BE NYLOPLAST 12" DRAIN BASIN, OR APPROVED EQUAL.
2. GRATES SHALL BE NYLOPLAST, 12"FLUSH GRATE OR APPROVED EQUAL AS SHOWN ON PLANS.

Area Drain (AD)

N.T.S. Source: VHB 9/17 LD_197

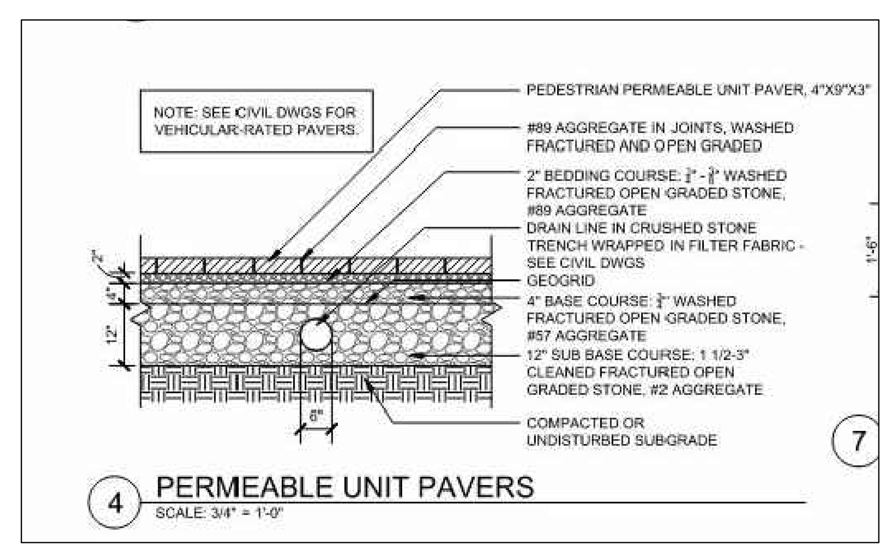

vhb.com
vhb
101 Walnut Street
PO Box 9151
Watertown, MA 02471
617.924.1770

140 Kendrick Street

Needham, Massachusetts

No.	Revision	Date	Appvd.

Designed by Checked by

Issued for: Notice of Intent Date: 9/23/2020

Not Approved for Construction

Drawing Title: **Site Details**

Drawing Number: **C-2**

COMMONWEALTH OF MASSACHUSETTS NICHOLAS J. SKOLY CIVIL No. 52677 REGISTERED PROFESSIONAL ENGINEER

Sheet 2 of 2

Project Number 15060.00

Saved Tuesday, September 15, 2020 5:04:50 PM NSKOLY Plotted Wednesday, September 23, 2020 10:06:16 AM Skoly, Nicholas

LANDSCAPE MATERIAL NOTES

1. THE CONTRACTOR SHALL REVIEW ALL DRAWINGS AND NOTES TO DETERMINE THE TOTAL SCOPE OF WORK AND ALL REQUIRED COORDINATION.
2. THE CONTRACTOR IS RESPONSIBLE FOR A THOROUGH SITE EXAMINATION TO SATISFY HIM OR HERSELF AS TO THE ACTUAL SITE CONDITIONS BEFORE SUBMISSION OF BIDS.
3. CONTRACTOR SHALL VERIFY ALL EXISTING UTILITY LOCATIONS PRIOR TO EXCAVATION.
4. CONTRACTOR SHALL ARRANGE PRE-INSTALLATION CONFERENCES AT PROJECT SITE FOR STONE WALLS AND PAVEMENT WORK. ATTENDEES SHALL INCLUDE OWNER'S REPRESENTATIVE, LANDSCAPE ARCHITECT, GENERAL CONTRACTOR AND ALL SUB-CONTRACTORS DIRECTLY CONCERNED WITH THE WORK.
5. CONTRACTOR SHALL PREPARE SUBMITTALS TO THE LANDSCAPE ARCHITECT FOR ALL COMPONENTS OF THE FINISHED WORK, INCLUDING SHOP DRAWINGS, PRODUCT DATA, MATERIAL CERTIFICATIONS, MIX DESIGNS AND SAMPLES.
6. CONTRACTOR SHALL FURNISH AND INSTALL CONSTRUCTED SAMPLES (MOCK-UPS) DEMONSTRATING ALL COMPONENTS OF THE DESIGN, INCLUDING FINISHED EXPOSED EDGES AND SURFACES, COLORS AND JOINTING FOR REVIEW AND APPROVAL BY THE LANDSCAPE ARCHITECT PRIOR TO CONSTRUCTING FINAL WORK. MOCK-UPS MAY BE PART OF THE FINAL CONSTRUCTION. MOCK-UPS SHALL BE MAINTAINED AND PROTECTED THROUGHOUT THE DURATION OF THE PROJECT AND WILL SERVE AS PROJECT STANDARD. CONTRACTOR SHALL DEMOLISH AND RECONSTRUCT MOCK-UP UNTIL APPROVAL FROM LANDSCAPE ARCHITECT. MOCK-UPS SHALL INCLUDE: ONE FULL HEIGHT AND WIDTH BY 6' LONG STONE WALL SECTION AND ONE 6' X 6' PANEL OF CONCRETE PAVEMENT.
7. THE DIMENSIONS OF PAVEMENT JOINTS AS SHOWN ON THE DRAWINGS ARE TO THE CENTER LINE OF EACH TYPE OF JOINT EXCEPT WHERE PAVEMENT MEETS A VERTICAL FACE; AT THIS LOCATION DIMENSIONS ARE TO THE VERTICAL FACE. THE DIMENSIONS SHOWN ON DRAWINGS SHOW DESIGN INTENT AND MUST BE FIELD VERIFIED PRIOR TO PREPARATION OF SHOP DRAWINGS. ALL ALIGNMENTS SHALL BE INSTALLED AS SHOWN.
8. THE CONTRACTOR SHALL BE RESPONSIBLE FOR DOCUMENTING THE LOCATIONS OF ALL EXISTING SITE ELEMENTS TO BE RESET IN THEIR SAME HORIZONTAL LOCATION.
9. THE CONTRACTOR IS RESPONSIBLE FOR ALL DAMAGE INSIDE OR OUTSIDE OF LIMIT OF WORK LINE DUE TO HIS/HER CONSTRUCTION OPERATIONS.
10. STORAGE AREAS FOR THE GENERAL CONTRACTOR'S EQUIPMENT AND MATERIALS SHALL BE LOCATED WITHIN THE LIMITS OF WORK AS APPROVED BY THE LANDSCAPE ARCHITECT.
11. WHERE NEW PAVING MEETS EXISTING PAVING, MEET LINE AND GRADE OF EXISTING WITH NEW CONSTRUCTION.
12. AT ALL LOCATIONS WHERE EXISTING BITUMINOUS CONCRETE PAVEMENT ABUTS NEW CONSTRUCTION, THE EDGE OF THE EXISTING PAVEMENT SHALL BE SAW CUT TO A CLEAN SMOOTH EDGE.
13. ALL EXISTING LIGHT POLES AND LIGHT BOLLARDS SHALL BE SAVED FOR OWNER FOR RELOCATION
14. EXISTING LIGHTS AND FLAG POLES SHALL BE SAVED FOR OWNER

PAVER SCHEDULE - HANOVER

TYPE	PRODUCT	PERMEABILITY	SIZE (LXWXD)	COLOR	TOTAL SF
1	PREST PAVERS	NON-PERMEABLE	3.25" X 18" X 4"	STANDARD/TUDOR FINISH	395
2	PERMEABLE 12" X 18"	PERMEABLE	12" X 18" X 4"	STANDARD/TUDOR FINISH	3,350
3	PREST PAVERS	NON-PERMEABLE	12" X 36" X 4"	STANDARD/TUDOR FINISH	7,035

1. ALL CONCRETE PAVERS WILL BE SELECTED FROM THE RANGE OF STANDARD MANUFACTURER COLORS
2. ALL PAVERS SHALL BE GAUGED

MATERIALS LEGEND

- CONCRETE PAVING
- UNIT PAVERS TYPE 1
- PERMEABLE UNIT PAVERS TYPE 2
- UNIT PAVERS TYPE 3
- STONE DUST PATH
- STONE WALL
- FIRE PIT IN TABLE
- EX-1 WALL WASH LIGHT
- EX-2 PERGOLA DOWNLIGHT
- EX-3 TREE UPLIGHT
- EX-4 BOLLARD LIGHT
- EX-5 TAPE LIGHT BELOW FIRE PIT
- EX-6 POLE LIGHT, MATCH EXISTING. SEE CIVIL DRAWINGS
- PA PLANTING

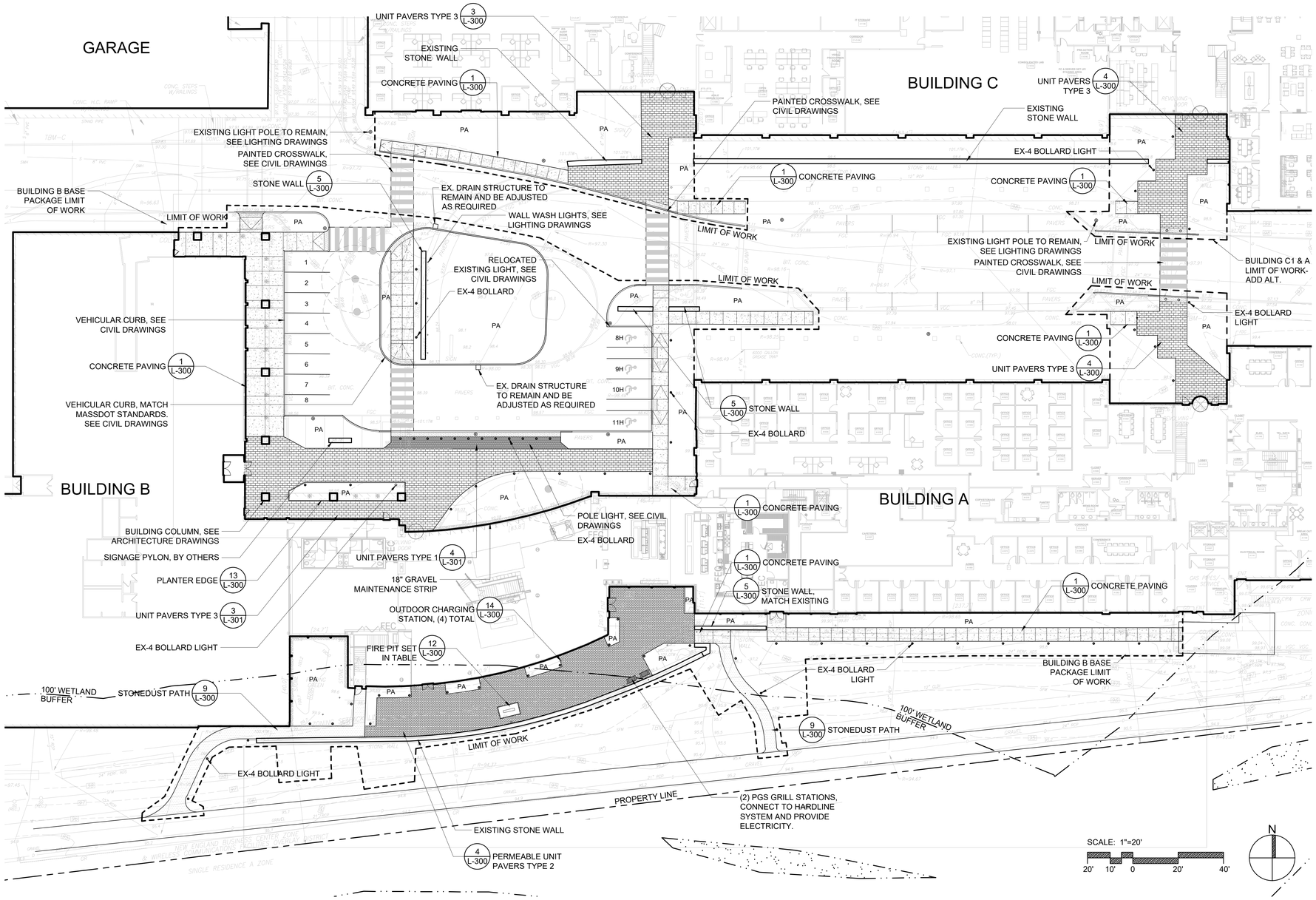

Stantec

Stantec Architecture and Engineering P.C.
311 Summer Street
Boston, 02210-1723
Tel: (617) 234-3100
www.stantec.com

Consultant

Copley Wolff Design Group
Landscape Architects & Planners

Copley Wolff Landscape Architects
10 Post Office Square
Boston, 02109
Tel: (617) 654-9000
www.copley-wolff.com

bxp Boston Properties

Notes

2	DESIGN PACKAGE	2020.09.25
1	SCHEMATIC DESIGN	2020.08.06

Issued/Revision YYYY.MM.DD

Permit/Seal

PRELIMINARY NOT FOR CONSTRUCTION

Scale

Project No. 2012

LANDSCAPE MATERIALS PLAN

L-100

ORIGINAL SHEET - ARCH D

© 2018 Stantec

PLANTING AND SOIL NOTES

1. IF DISCREPANCIES EXIST BETWEEN THE NUMBER OF PLANTS DRAWN ON THE PLANTING PLAN AND THE NUMBER OF PLANTS IN THE PLANT LIST, THE PLANTING PLAN SHALL GOVERN.
2. ALL NEW PLANT MATERIAL SHALL CONFORM TO THE MINIMUM GUIDELINES ESTABLISHED FOR NURSERY STOCK PUBLISHED BY THE AMERICAN ASSOCIATION OF NURSERYMEN, INC. IN ADDITION, ALL NEW PLANT MATERIAL FOR THE PROJECT SHALL BE OF SPECIMEN QUALITY.
3. THE LANDSCAPE ARCHITECT SHALL ONLY REVIEW TREES THAT ARE IN THE GROUND AT THE NURSERY. NO PRE-DUG TREES WILL BE ACCEPTED. THEREFORE TIMING OF IN-GROUND REVIEWS MUST BE COORDINATED WITH EXPECTED INSTALLATION DATES.
4. ALL NEW PLANTS TO BE BALLED & BURLAPPED OR CONTAINER GROWN, UNLESS OTHERWISE NOTED ON THE PLANT LIST.
5. THE CONTRACTOR SHALL SUPPLY ALL NEW PLANT MATERIAL IN QUANTITIES SUFFICIENT TO COMPLETE THE PLANTING SHOWN ON THE DRAWINGS.
6. ANY PROPOSED SUBSTITUTIONS OF PLANT SPECIES SHALL BE MADE WITH PLANTS OF EQUIVALENT OVERALL FORM, HEIGHT, BRANCHING HABIT, FLOWER, LEAF, COLOR, FRUIT AND CULTURE, AND ONLY AFTER WRITTEN APPROVAL OF THE LANDSCAPE ARCHITECT.
7. ALL NEW PLANTS SHALL BE TAGGED AND APPROVED BY THE LANDSCAPE ARCHITECT AT THE NURSERY PRIOR TO DIGGING OR DELIVERY TO THE SITE.
8. CONTRACTOR SHALL LOCATE AND VERIFY ALL EXISTING UTILITY LINES PRIOR TO PLANTING AND SHALL REPORT ANY CONFLICTS TO THE LANDSCAPE ARCHITECT.
9. STAKE LOCATION OF ALL PROPOSED PLANTING FOR APPROVAL BY LANDSCAPE ARCHITECT PRIOR TO THE COMMENCEMENT OF PLANTING.
10. NEW SHRUBS AND GROUNDCOVER SHALL BEAR THE SAME RELATIONSHIP TO GRADE AS IT BORE TO PREVIOUS GRADE. TREES SHALL BE SET 3" HIGHER THAN PREVIOUS GRADE. NO TREES SHALL BE PLANTED BEFORE ACCEPTANCE OF ROUGH GRADING.
11. ALL PLANT BEDS TO RECEIVE UN-DYED, AGED AND SHREDDED BARK MULCH AS PER SPECIFICATIONS.
12. ALL EXISTING TREES TO REMAIN SHALL BE PROPERLY PROTECTED DURING CONSTRUCTION. PROTECTION TECHNIQUES SHALL BE REVIEWED AND APPROVED BY THE LANDSCAPE ARCHITECT.
13. PRUNE TREES IN ACCORDANCE WITH THE SPECIFICATIONS.
14. ALL PLANT MATERIAL SHALL BE MAINTAINED BY CONTRACTOR FOR ONE-FULL CALENDAR YEAR AND GUARANTEED FOR ONE-FULL CALENDAR YEAR.
15. CONFIRM ALL QUANTITIES AGAINST PLANTING PLANS, GRADING PLANS, AND SPECIFICATIONS, INCLUDING SITE DISTURBANCE OUTSIDE OF THE LIMIT OF GRADING NECESSITATED TO FACILITATE CONSTRUCTION.
16. WHERE SAND AND GRAVEL ARE SPECIFIED FOR A DRAINAGE LAYER, EXTEND DRAINAGE LAYER TO ASSOCIATED DRAIN LINES, DRAINAGE AREAS, OR DAYLIGHT.
17. WHERE ONE SOIL TYPE MEETS ANOTHER SOIL TYPE, FORM A 1:1 SLOPED BOUNDARY TRANSITION.
18. WHERE A SOIL PROFILE ENCROACHES WITHIN THE DRIP LINE OF EXISTING TREES, CONSULT WITH LANDSCAPE ARCHITECT PRIOR TO COMMENCING EXCAVATION.
19. ALL EXCAVATION AND PLACEMENT OF SOILS WITHIN THE DRIP LINE OF EXISTING TREES TO BE PERFORMED BY HAND.
20. SCARIFY SUBGRADE AS SPECIFIED BEFORE PLACEMENT OF ANY PLANTING SOILS.
21. DO NOT PLACE OR HANDLE SOILS THAT ARE WET.
22. PROTECT ALL EXISTING SOILS AGAINST COMPACTION, CONTAMINATION WITH CONSTRUCTION MATERIALS, AND ALL DISTURBANCE.
23. CONTRACTOR IS RESPONSIBLE FOR ACTUAL SITE CONDITIONS, COORDINATION OF SOILS PLACEMENT, AND PLANTING SUBDRAINAGE.
24. DO NOT PLACE ANY PLANTING SOIL PRIOR TO INSPECTION BY LANDSCAPE ARCHITECT.
25. SAND BASED STRUCTURAL SOIL (SBSS) WHERE IDENTIFIED SHALL CONSIST OF A MINIMUM OF 1,000 C.F. OF SBSS FOR EACH TREE.
26. ALL EXISTING TREES ON SITE SHALL BE PRESERVED AND PROTECTED UNLESS OTHERWISE NOTED.

PLANTING SCHEDULE

Symbol	Qty.	Scientific Name	Common Name	Size	Comments
Deciduous Trees					
QB	4	*Quercus bicolor*	Swamp White Oak	3 1/2"- 4" cal.	B&B, single straight central leader
Ornamental Trees					
CCP	2	*Cercis canadensis* 'Forest Pansy'	Forest Pansy Eastern Redbud	12'-15' ht.	B&B, multi-stem, , 3-4 main trunks, SPECIMEN QUALITY
Shrubs & Groundcovers					
AM	31	*Aronia melanocarpa*	Black Chokeberry	30"-36" ht.	36" O.C. spacing
AN	135	*Aster novae-angliae*	New England Aster	36"-42" ht.	18" O.C. spacing
AUM	44	*Arctostaphylos uva-ursi* 'Massachusetts'	Bearberry	6"-12" ht.	18" O.C. spacing
CA	12	*Clethra alnioliia*	Sweet Pepperbush	36"-42" ht.	36" O.C. spacing
CSC	11	*Cornus sericea* 'Cardinal'	Cardinal Red-Osier Dogwood	4'-5' ht.	B&B, 5' O.C. spacing
DC	87	*Deschampsia cespitosa*	Tufted Hair Grass	24"-30" ht.	12" O.C. spacing
HQR	34	*Hydrangea quercifolia* 'Ruby Slippers'	Oakleaf Hydrangea	30"-36" ht.	48" O.C. spacing
IVW	23	*Ilex verticillata* 'Winter Red'	Winter Red Winterberry	3'-4' ht.	48" O.C. spacing
IVS	2	*Ilex verticillata* 'Southern Gentleman'	Southern Gentleman Winterberry	3'-4' ht.	48" O.C. spacing
MP	25	*Myrica pennsylvanica*	Bayberry	3'-4' ht.	48" O.C. spacing
NF	70	*Nepeta faasenii*	Catmint	12"-18" ht.	18" O.C. spacing
RAG	221	*Rhus aromatica* 'Gro-low'	Gro-low Sumac	24"-30" ht.	24" O.C. spacing
SS	242	*Schizachyrium scoparium*	Little Bluestem	18"-24" ht.	18" O.C. spacing
ST	28	*Spiraea tomentosa*	Steeplebush	30"-36" ht.	36" O.C. spacing
TC	308	*Tiarella cordifolia*	Foamflower	10"-12" ht.	12" O.C. spacing
VNW	8	*Viburnum nudum* 'Winterthur'	Smooth Witherod	3'-4' ht.	B&B, 6' O.C. spacing
XS	208	*Xanthorhiza simplicissima*	Yellowroot	18"-24" ht.	18" O.C. spacing

PLANTING LEGEND

- EXISTING TREE TO REMAIN
- PROPOSED DECIDUOUS TREE
- PROPOSED ORNAMENTAL TREE
- PROPOSED DECIDUOUS & EVERGREEN SHRUBS
- PROPOSED PERENNIAL & GROUNDCOVER BEDS
- PROPOSED SOD LAWN
- EXISTING LAWN TO REMAIN
- EXISTING TREE TO BE REMOVED

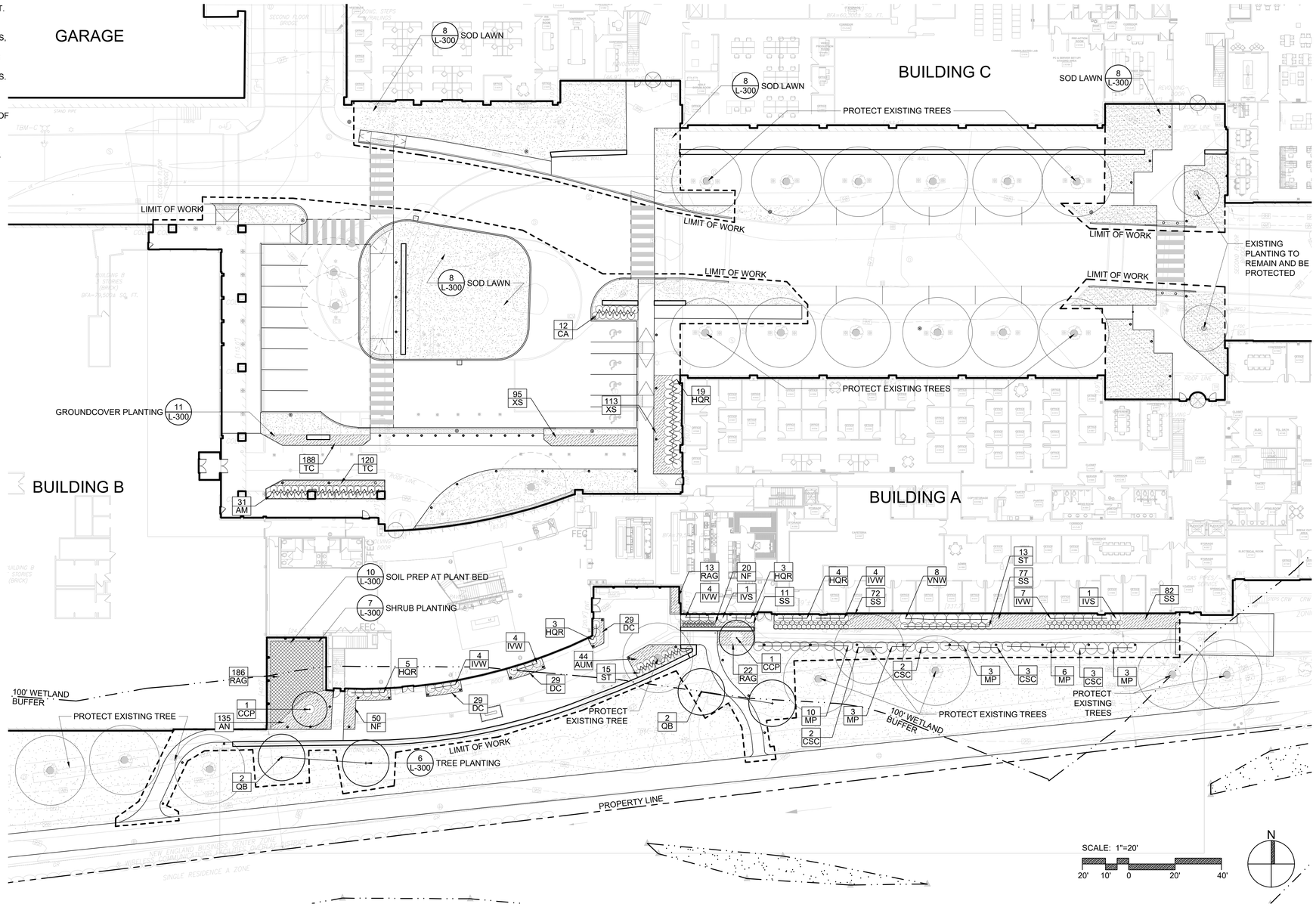

Stantec

Stantec Architecture and Engineering P.C.
311 Summer Street
Boston, 02210-1723
Tel: (617) 234-3100
www.stantec.com

Consultant

Copley Wolff Design Group
Landscape Architects & Planners

Copley Wolff Landscape Architects
10 Post Office Square
Boston, 02109
Tel: (617) 654-9000
www.copley-wolff.com

bxp Boston Properties

Notes

Issued/Revision		YYYY.MM.DD
2	DESIGN PACKAGE	2020.09.25
1	SCHEMATIC DESIGN	2020.08.06

Permit/Seal

PRELIMINARY NOT FOR CONSTRUCTION

Scale

Project No. 2012

LANDSCAPE PLANTING PLAN

L-200

© 2018 Stantec