Needham Public Health Division

178 Rosemary Street, Needham, MA 02494 781-455-7940 ext. 504
www.needhamma.gov/health 781-455-7922 (fax)

FOOD ESTABLISHMENT – PLAN REVIEW

1. **Plan Review - What you need to do first**

2. **Permits needed to Operate a Food Establishment in the Town of Needham**

3. **Food Establishment Plan and Specification Review**

4. **Specifications:**

   A. **Finish Schedule**
   B. **Insect and Rodent Harborage**
   C. **Garbage and Refuse Inside**
   D. **Plumbing**
   E. **Water Supply**
   F. **Sewage Disposal**
   G. **Dressing Rooms**
   H. **General**
   I. **Exhaust Hoods**
   J. **Sinks**
   K. **Dishwashing Facilities**

5. **Application for Food Service Permit**

6. **Examples:**

   A. **Exhaust Hood Design Criteria**

   B. **Floor Plan**

   C. **Manufacturer's Specification Sheet (Spec or Cut Sheet)**

   D. **Menu Statements:**

      1.) **Consumer Advisory**

      2.) **Food Allergy Advisory**

Needham Public Health Division

178 Rosemary Street, Needham, MA 02494 781-455-7940 ext. 504
www.needhamma.gov/health 781-455-7922 (fax)

PLAN REVIEW - WHAT YOU NEED TO DO FIRST

Prior to your plan review you must:

1. **Submit floor plans (see example).**
   Provide plans that are a minimum if 11 x 14 inches in size (also an electronic copy) including the layout of the floor plan accurately drawn to a minimum scale of ¼ inches =1 foot. This is to allow for easy reading of the plans.

2. **Submit a full menu (see example). (Do not forget to include Consumer Warnings if you have any raw or rare foods on the menu and include the Food Allergy statement).**

3. **Submit a cut sheet for each piece of equipment (see example).**

4. **Submit a check in the amount of for the Plan Review which is non-refundable.**

5. **Submit a separate check for the appropriate Food Service Permit.**

6. **Arrange a time to review your plans with the Health Agent.**

7. **Written plan approval must be received before any work or construction begins. The Health Department will review plans within 30 days after submitting a completed application, plans and fees.**

8. **Complete a Food Service Application. (attached).**

Needham Public Health Division

178 Rosemary Street, Needham, MA 02494 781-455-7940 ext. 504
www.needhamma.gov/health 781-455-7922 (fax)

PERMITS NEEDED TO OPERATE A FOOD ESTABLISHMENT IN THE TOWN OF NEEDHAM

Food Permits

Food Service: Where any food product is heated, opened, sliced or prepared in any way. The Food Service Permit includes frozen desert and milk.

Frozen Desert Machine: Machine and mix used to generate a semi solid food product or slush. The Frozen Desert Machine also requires monthly testing – standard plate bacteria count and coliform count by a certified laboratory. Laboratory test results must be sent to the Health Department.

Retail: Products are packaged by a licensed manufacturer and remains intact until opened by the consumer

Catering: Preparation and transportation of meals intended for individual portion service or a company preparing food in a location other than their permitted establishment.

Mobile: Self propelled vehicle-mounted food establishment or push cart.

Other Departments to Check With

Building Department: Enforces zoning regulations and code compliance. Determines building code compliance including gas and electrical.

Board of Selectmen: Licensing issues such as Common Victualers (seating) and alcohol licenses.

Town Clerk: Local business certificate registration (a/k/a Doing Business As)

Planning Board: Site plan review and special permit for use may be required (see Planning Board Director).

Needham Public Health Division

178 Rosemary Street, Needham, MA 02494 781-455-7940 ext. 504
www.needhamma.gov/health 781-455-7922 (fax)

Prevent. Promote. Protect.

FOOD ESTABLISHMENT PLAN AND SPECIFICATION REVIEW

_____New **_____Remodel** **_____Conversion**

Establishment Name: _____

Establishment Address: _____

Establishment Telephone No:_____**Email Address:** _____

Fax No: _____

Applicant Name & Title: _____

_____ **Mailing Address:**_____

_____ **Telephone #**_____

Title (owner, manager, architect, etc.):_____

I have submitted plans/applications to the following (please note the date of submittal on application line):

_____Board of Selectmen **_____Plumbing**

_____Zoning **_____Electric**

_____Planning **_____Police**

_____Building **_____Fire**

_____Other_____ **_____Conservation**

Meals to be served (approximate number): **No. of seats_____**

_____Breakfast **No. of Staff_____**

_____Lunch **(maximum per shift)**

_____Dinner

_____Number of Floors **Square Feet:_____**

Please enclose the following documents:

_____Proposed menu (including off-site and banquet menus)

_ Manufacturer's Specification sheets for each piece of equipment (cut sheets)

_____Site plan showing location of business in building, location of building on site including alleys, streets and location of any outside facilities (dumpsters, well, septic system – if applicable).

_____Plan drawn to scale (1/4 inch = 1 foot) of facility showing location of equipment, plumbing, and electrical.

Needham Public Health Division

178 Rosemary Street, Needham, MA 02494 781-455-7940 ext. 504
www.needhamma.gov/health 781-455-7922 (fax)

Please make certain the following information is available on plans or attached on additional documents:

- **Details of lighting – location, type of shielding**
- **Details of ventilation – mechanical or natural, CFM**
- **Location and size of grease traps.**
- **Location of employee and/or patron restrooms including lavatories, water closets or urinals.**
- **Location of employee dressing rooms and/or lockers.**
- **Note that ceiling, walls, and floors must be suitably finished to facilitate cleaning. All studs, joists and rafters must not be exposed. Utility service lines and pipes must not be unnecessarily exposed.**
- **Details of special operations such as salad bars, bulk foods and vacuum packing.**

A. Finish Schedule

Indicate type of materials to be used (i.e. quarry tile, stainless steel, 4 inch plastic covered molding, etc,)

	Floor	Coving	Walls	Ceiling
Kitchen				
Bar				
Warewashing				
Food Storage				
Other Storage				
Toilet Rooms				
Dressing Rooms				
Garbage & Refuse Storage				
Mop Service Basin Area				
Walk-In Refrigerators and Freezers				

Needham Public Health Division

178 Rosemary Street, Needham, MA 02494 781-455-7940 ext. 504
www.needhamma.gov/health 781-455-7922 (fax)

Prevent. Promote. Protect.

B. Insect and Rodent Harborage

Applicant: Please check appropriate boxes.

	YES	NO	N/A
1. Are all outside doors self-closing with rodent proof flashing?			
2. Are all screen doors provided on outside doors for use in summer?			
3. Do all operable windows have minimum #16 mesh screening?			
4. Are all pipes, electrical conduit chases, ventilation systems exhausted and intakes sealed?			
5. Are air curtains used? If yes, where?_____			
6. Describe method of keeping area around building free of unnecessary brush, litter, boxes or other harborage?_____ _____ _____ _____			

C. Garbage and Refuse

Inside	**YES**	**NO**	**N/A**
7. Do all containers have lids?			
8. Will refuse be stored inside? If so. Where? _____			
9. Is there a can cleaning sink or area?			
Outside			
10. Will a dumpster be used? Number_____Size_____ Frequency of pick-up_____ Contractor_____			
11. Will cans be stored outside?			

12. Describe the surface on which the dumpster/compactor/cans are to be stored

_____

_____

13. Describe the location of grease storage receptacle

_____

_____

D. Plumbing

E. According to manufacturer specification, please describe back-siphonage protection of the following:

	Air Gap	Air Brake	"P" Trap	Vacuum Breaker	*Integral Trap*	Condensate Pump	Grease Trap
14. Toilets							
15. Urinals							
16. Dishwasher							
17. Garbage Grinder							
18. Ice Machine							
19. Ice Storage Bin							
20. Sinks							
a. Mop Sink							
b. Janitor							
c. Handwash							
d. 3 Compartment							
e. 2 Compartment							
f. 1 Compartment							
21. Steam Tables							
22. Dipper Wells							
23. Refrigeration condensate/ drain lines							
24. Hose connections							
25. Beverage Dispenser/w Carbonator							
26. Potato/ Vegetable Peeler							

27. Soap Dispensers (wall mounted, individual free standing pump dispensers) location and number

_____

28. Hand drying facilities (paper towels, air blower, etc.) location and number

_____

29. Describe waste receptacles in each rest room

_____

_____

E. Water Supply

30. Is water supply public? ( ) or private ( )

31. If Private, has the source been approved? Yes ( ) No ( ) Pending ( )

32. Is ice made on premises ( ) or purchased commercially ( )

If on premises, are specifications of machine enclosed? Yes ( ) No ( )

F. Sewage Disposal

33. Is building connected to municipal sewer? Yes ( ) No ( )

34. If no, has private disposal system been approved? Yes ( ) No ( ) Pending ( )

Please attach copy of written approval and/or permit.

G.) Dressing Rooms

35. Are separate dressing rooms provided? Yes ( ) No ( )

36. Describe storage facilities for employees' personal belongings (i.e. purse, coats, boots, umbrellas etc.)

_____

_____

H.) General

37. Describe facilities for separation of storage of insecticides/rodenticides and detergents/ sanitizers/ cleaning / agents/caustics/acids/polishes and first aid supplies/personal medications.

_____

_____

38. Are laundry facilities located on the premises? Yes ( ) No ( )

If yes, what will be laundered?_____

Is location physically separated from food preparation areas and warewashing? Yes ( ) No ( )

39. Location of clean linen storage:_____

40. Location of dirty linen storage:_____

I.) Exhaust hoods* **(See attached sheet for more info. on sizing)**

Hood Locations	Filters &/or Extraction Devices	Square Feet	Fire Protection	Air Capacity CFM

***(Please follow the National Environmental Health Association's Hood Design Guidelines taken from the Manual of Recommended Practice for Ventilation in Food Service Establishments, on the page attached.**

J.) Sinks

41. Is a separate mop sink present? Yes ( ) No ( )

If no, please describe facility for cleaning of mops and other equipment.

_____

_____

42. Is a separate food preparation sink present? Yes ( ) No ( )

43. Is a separate handwash sink present in the food preparation area? Yes ( ) No ( )

K.) Dishwashing Facilities

44. Will sinks or a dishwasher be used for ware washing?

Dishwasher ( )

Three Compartment Sink ( )

Both ( )

45. If dishwasher, type:

Hot Water ( )

Chemical ( )

If hot water:

Temperature of wash water _____

Temperature of final rinse _____

Is heater booster provided? Yes ( ) No ( )

If Chemical:

Type of chemical _____

Automatic feed Yes ( ) No ( )

46. If three compartment sink:

Does the largest pot and pan fit in each compartment? Yes ( ) No ( )

Are there drain boards on both ends? Yes ( ) No ( )

What type of sanitizer is used?

Chlorine ( ) Iodine ( ) Quaternary ammonium ( )

NOTE: Please make certain that the corresponding sanitizer testing kits/papers are available at the pre-operation inspection.

Statement: I hereby certify that the above information is correct, and I fully understand that any deviation from the above without prior permission from the Health Department may nullify this approval.

Signature(s) _____

_____ _____

Date **Owner(s) or responsible representative(s)**

Approval of these plans and specifications by this Health Department does not indicate compliance with any other code, law, or regulations that may be required – federal, state or local. It further does not constitute endorsement or acceptance of the completed establishment (structure or equipment). A pre-opening inspection of the establishment with equipment will be necessary to determine if it complies with the local and state laws governing food service establishments.

Needham Public Health Division

178 Rosemary Street, Needham, MA 02494 781-455-7940 ext. 504
www.needhamma.gov/health 781-455-7922 (fax)

Needham Public Health
Prevent. Promote. Protect.

FOOD ESTABLISHMENT PERMIT APPLICATION

(Application must be submitted at least 30 days before the planned opening date)

1) Establishment Name:	
2) Establishment Address:	
3) Establishment Mailing Address (if different):	
4) Establishment Telephone No:	**5) Email Address:**
6) Applicant Name & Title	
7) Applicant Address:	
8) Applicant Telephone No:	**9) 24 Hour Emergency Phone No:**
10) Owner Name & Title (if different from applicant):	
11) Owner Address (if different from applicant):	
12) Establishment Owned By: □ An Association □ A Corporation □ An Individual □ A Partnership □ Other Legal Entity	**13) If a corporation or partnership, give name, title, and home address of officers or partner.** **Name Title Home Address** ---------- ---------- ----------
14) Landlord contact info. (Name, address, phone):	
15) Person Directly Responsible For The Daily Operations (Owner, Person in Charge, Supervisor, Manager, etc.)	
Name & Title:	
Address:	
Telephone No:	**Fax:**
Emergency Telephone No:	**Email:**
16) District or Regional Supervisor (if applicable)	
Name & Title:	
Address:	**Email:**
Telephone No:	**Fax:**
17) Water Source: **DEP Public Water Supply No. (if applicable)**	**18) Sewage Disposal:**
19) Days and Hours of Operation:	**20) No. of Food Employees:**
21) Name of Person in Charge Certified in Food Protection Management _____ Please attach copy of current certificate. ***Application will not be processed without it***	
22) Person Trained in Anti-Choking Procedures (if 25 seats or more: ( ) Yes ( ) No	
23) Location: **(check one)** □ **Permanent Structure** □ **Mobile** **25) Length of Permit:** **(check one)** □ **Annual** □ **Seasonal/Dates:** _____	**24) Establishment Type (check all that apply)** □ **Retail ( ) Sq. Ft.** □ **Food Service ( ) # of seats** □ **Food Service - Take out** □ **Food Service - Institutional (Meals/Day)** **Other: (Describe)** **26) Trash/Dumpster pick-up schedule - Dumpster company name/phone number:**
□ **Temporary/Dates/Time**	**27) Grease pick-up schedule/Company name:**
	□ **Caterer** □ **Food Delivery** □ **Residential Kitchen for Retail Sale** □ **Residential Kitchen for Bed & Breakfast Establishments** □ **Frozen Desert Manufacturer**

Needham Public Health Division

178 Rosemary Street, Needham, MA 02494 781-455-7940 ext. 504
www.needhamma.gov/health 781-455-7922 (fax)

Prevent. Promote. Protect.

28) Food Operation (check all that apply)	Definitions: PHF - Potentially Hazardous food (time/temperature controls required) Non-PHF's - non-potentially hazardous food (no time/temperature controls required) RTE - ready-to-eat foods (Ex. Sandwiches, salads, muffins which need no further processing)	
□ Sale of Commercially Pre-Packaged Non - PHF's	□ PHF Cook To Order	□ Hot PHF Cooked and Cooled or Hot Hold for More Than a Single Meal Service
□ Sale of Commercially Pre-Packaged PHF's	□ Preparation of PHF's for Hot and Cold Holding For Single Meal Service	□ PHF and RTE Foods Prepared for Highly Susceptible Population Facility
□ Delivery of Packaged PHF's	□ Sale of Raw Animal Foods Intended to be Prepared by Customer	□ Vacuum Packaging/Cook Chill
□ Reheating of Commercially Processed Foods For Service Within 4 Hours	□ Customer Self-Service	□ Use of Process Requiring A Variance and/or HACCP Plan (including bare hand contact alternatives, time as a public health control)
□ Customer Self-Service of Non-PHF and Non Perishable Foods Only	□ Ice Manufactured and Packaged for Retail Sale	□ Offers Raw or Undercooked Food of Animal Origin.
□ Preparation of Non-PHF's	□ Juice Manufactured and Packaged for Retail Sale	□ Prepares Food/Single Meals for Catered Events or Institutional Food Service
□ Other (Describe)	□ Offers RTE PHF in Bulk Quantities	□ Retail Sale of Salvage, Out-of-Date or Reconditioned Food
		To be completed by Health Department - Total Permit Fee: $ _____ Payment due with application. (Check made payable to the Town of Needham.)

I, the undersigned, attest to the accuracy of the information provided in this application and I affirm that the food establishment operation will comply with 105 CMR 590.000 and other applicable law. I have been instructed by the Health Department on how to obtain copies of 105 CMR 590.000 and the Federal Food Code.

24) Signature of Applicant: _____

Pursuant to MGL Ch. 62C, sec. 49A, I certify under the penalties of perjury that I, to the best knowledge and belief, have filed all state tax returns and paid state taxes required under law.

25) Social Security Number or Federal ID:_____

26) Signature of Individual or Corporate Name: _____

178 Rosemary Street, Needham, MA 02494 781-455-7940 ext. 504
www.needhamma.gov/health 781-455-7922 (fax)

Examples/Additional Information:

A. Exhaust Hood Design Criteria
B. Floor Plan
C. Manufacturer's Specification Sheet (Spec or Cut Sheet)
D. Menu Statements:
    1.) Consumer Advisory
    2.) Food Allergy Advisory

Needham Public Health Division

178 Rosemary Street, Needham, MA 02494 781-455-7940 ext. 504
www.needhamma.gov/health 781-455-7922 (fax)

A.) Exhaust Hood Design Criteria -

Proper operation of an exhaust hood system begins with good design. The most common problems in proper hood design are 1) too much or too little exhaust; 2) too much or too little make-up air; and 3) turbulence into the kitchen resulting in poor capture and containment of the thermal plume above cooking equipment.

In designing commercial kitchen ventilation, the following design concepts should be observed:

1. Hoods should be located where there will be a minimum of traffic and cross-drafts past the hood and face.

2. Island-type cooking arrangements ventilated by canopy hoods open on all four sides require considerably higher exhaust volumes than wall hoods. For energy conservation, island canopy hoods are not recommended.

3. To prevent greases from accumulating in the ductwork, filters or other grease extraction equipment must be incorporated into the hood. This reduces the danger of fire and makes the job of cleaning ducts and fans easier.

4. Grease filters should be sized according to the manufacturer's recommendations for velocity to maximize grease removal.

5. Grease filters should be mounted at an angle at least 45 degrees from vertical with a grease gutter and grease collection container installed below the filters.

6. Exhaust ducts should be as straight and as short as possible with a minimum of elbows or other fittings. Non vertical exhaust ducts should slope back toward the hood so that grease residues can drain back to the grease collection system.

7. Fans should be installed so that they can be easily removed to make maintenance and cleaning easier and safer.

8. A fan must be selected which will exhaust the required volume of air against the calculated static pressure (resistance). A belt drive fan is recommended as the air quantity may be adjusted for the particular exhaust system.

9. The make-up air system should be designed to heat outside air from 0 deg. F to approximately 70 deg. F. Diffusers should be distributed and sized to minimize cross drafts at the hoods and to distribute air throughout the kitchen area for warm weather comfort. The heating unit should be provided with sufficient heat input controls to prevent overheating during the moderately warm months in spring and fall.

Taken from the 'Manual of Recommended Practice for Ventilation in Food Service Establishments,' by James D. Barnes.

Needham Public Health Division

178 Rosemary Street, Needham, MA 02494 781-455-7940 ext. 504
www.needhamma.gov/health 781-455-7922 (fax)

B.) EXAMPLE FLOOR PLAN (NOTE: This Example is Incomplete)

Name of Establishment

Physical address

Name of owner

Mailing address

Telephone number / Email address

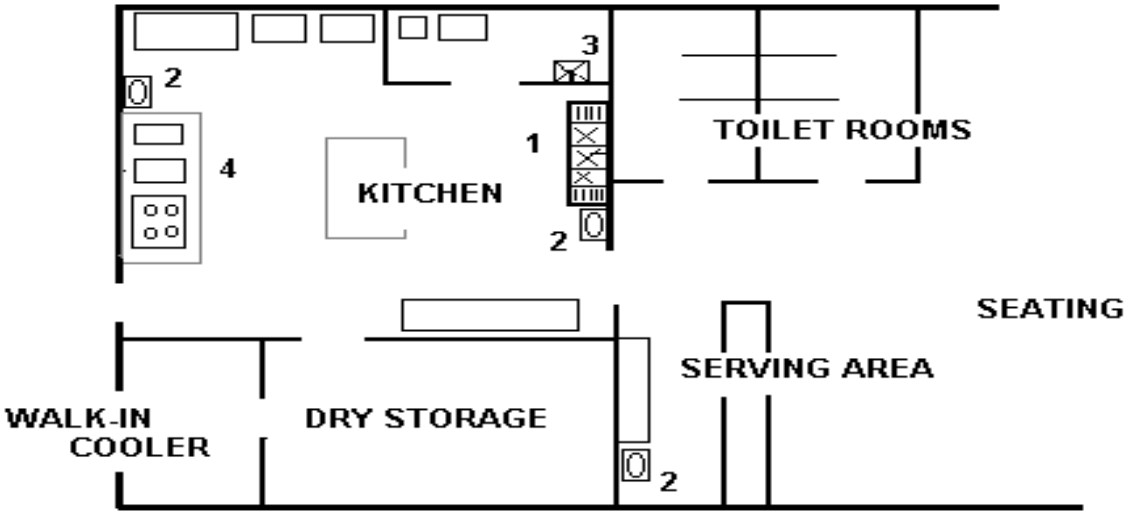

Legend
1- 3-compartment sink with 2 drain boards / dish machine
2- Hand washing sink
3- Service/Mop sink
4- Cooking equipment – List out individually, etc.

Source of water: City water

Sewage disposal: City sewer

Toilet Rooms have closers on doors and ventilation to outside air.

Lights in all food preparation and utensil washing areas are shielded.

Needham Public Health Division

178 Rosemary Street, Needham, MA 02494 781-455-7940 ext. 504
www.needhamma.gov/health 781-455-7922 (fax)

C.) EXAMPLE - Specification Sheet

Company
Address
Phone
Fax

Food Prep Table: Solid Door Salad and Sandwich Unit Model

- The best unit on the market, designed to last.
- Complies with ANSI/NSF Standard
- Unit holds temperature 32 F to 41 F
- Unit is Stainless steel
- PVC coated shelving
- Holds 8 long pans or 16 square pans
- NSF approved Cutting board included

Specifications

Model #	Capacity	Shelves	Pans (top)	Doors	Cabinet Dimensions (inches) Length/Width/Height	Voltage	Amps
SD -7-09	13 Cu. Ft.	2	8 - 16	2	37/ 30/ 37	115/60/1	4.9

Organizational endorsement emblems can be found on the spec sheet: Such as UL, NSF and other registered symbols. See examples below –

Needham Public Health Division

178 Rosemary Street, Needham, MA 02494 781-455-7940 ext. 504
www.needhamma.gov/health 781-455-7922 (fax)

Prevent. Promote. Protect.

C.) (cont.) EXAMPLE - Specification Sheet

Company
Address
Phone
Fax

Food Prep Table: Solid Door Salad and Sandwich Unit Model

Standard Features

REFRIGERATION SYSTEM
- 134A refrigerant
- Oversized refrigeration with airflow system to provide uniform temperature throughout unit
- Forced air design hold 33 F to 41 F of products in unit
- Sealed fan motor
- Condensation unit slides out for easy maintenance.

UNIT CONSTRUCTION
- Exterior – stainless steel front, top and Sides
- Interior – NFS approved, white liner

DOOR
- Stainless steel exterior with white liner to match cabinet interior.

SHELVING
-Two adjustable PVC coated wire shelves
- ¾ inch thick cutting board

MODEL FEATURES
- Full length removable cutting board
- Insulated lid to keep pans cooler

PAN CAPACITY
- Pan opening designed to accommodate varying pan configurations.

ELECTRICAL
- Unit pre-wired at factory for connection to a 115/60/1 phase – 15 amp outlet

OPTIONS
- Additional shelving
- Sneezeguard
- ¾ inch thick cutting board
- Crumb catcher
- Pan Dividers

Unit Dimension for layout and installation.

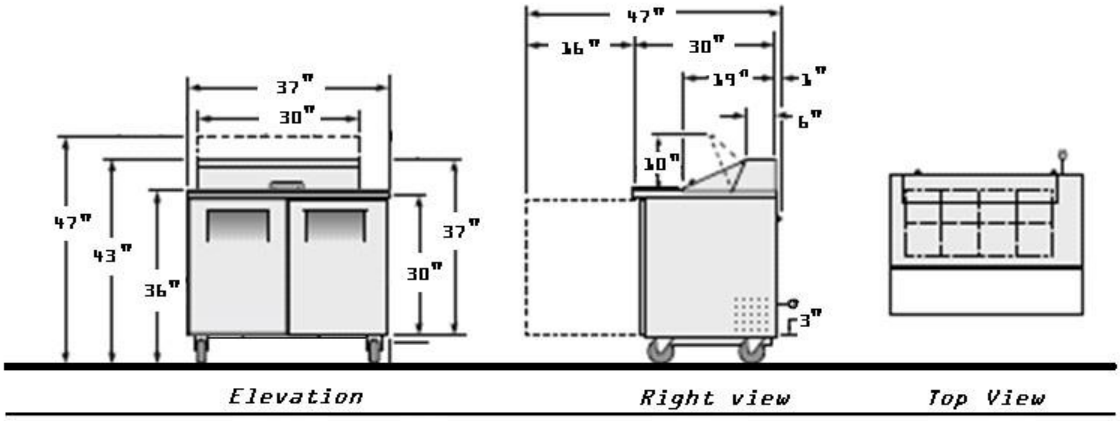

Needham Public Health Division

178 Rosemary Street, Needham, MA 02494 781-455-7940 ext. 504
www.needhamma.gov/health 781-455-7922 (fax)

D.) Menu Statements –

1.) Consumer Advisory Requirements -

Applicability: The consumer advisory is intended to apply to all food establishments where ready-to-eat (RTE) raw or undercooked animal foods or RTE foods containing raw or undercooked animal foods are sold or served to the public. §46.423

Language: The language for the consumer advisory is to be in the same language as the menu. For example, if the menu is written in English, the consumer advisory would have to be in English. If the menu is written in French only, then the consumer advisory would have to be in French. If the menu is in dual languages, then the consumer advisory should be in dual languages.

Text size: Text size for hand held menus or table tents should be equivalent to 11 points (this example is 11-point text).

The consumer advisory is a critical item: The lack of a consumer advisory when necessary is considered a risk factor.

How to comply with consumer advisory:

1. Disclosure: Disclose what items may be undercooked.
   a. What items are affected?
      i. Use leading statements (raw, rare, "cooked to order") OR
      ii. . Asterisk (*) the foods in question (New York Strip Steak*) AND

   b. Adjust menu to reflect the above OR in the absence of a menu, provide in written format to consumer via a pamphlet
2. Reminder: The goal of the reminder is to inform the consumer of the risks of eating raw or undercooked foods. This can be accomplished by utilizing reminder statements on the menu, placard, table tent, or by other written means OR by utilizing a brochure or pamphlet. The statement would be placed in another location on the menu, but reference the asterisked items.

Examples:

a. *** "Consuming raw or undercooked meats, poultry, seafood, shellfish, or eggs may increase your risk of foodborne illness, especially if you have certain medical conditions."**

b. *** "Consuming raw or undercooked meats, poultry, seafood, shellfish or eggs may increase your risk of foodborne illness."**

c. **When using a pamphlet as a reminder: * "Regarding the safety of these items, written information is available upon request. "**

Needham Public Health Division

178 Rosemary Street, Needham, MA 02494 781-455-7940 ext. 504
www.needhamma.gov/health 781-455-7922 (fax)

2.) Food Allergy Advisory Requirements –

There are three parts to the law. The first two were required to be in place October 2010. The third part was required to be in place February 2011.

1. An allergen poster is required to be displayed conspicuously for employees. The allergen poster reminds employees of the eight major food allergens and describes what to do in the case of a suspected allergic reaction. The allergen poster was created by the Food Allergen and Anaphylaxis Network (FAAN) and is available here: http://www.foodallergy.org/page/restaurant-poster.

2. Restaurants are also required to put the following statement on their menu: **"Before placing your order, please inform your server if a person in your party has a food allergy."** (NOTE: Some organizations such as hospitals and long term care centers already have procedures in place to ask patients about food allergies and document that information. Organizations with those procedures in place are exempted from the food allergen statement on their menu.)

3. Food establishments must have at least one certified food protection manager (this usually means a supervisor (ServSafe or similarly trained) who is certified as having viewed a specific food allergen awareness video supplied by the state/FAAN. The certification costs $10 and is valid for five years.

The law applies to "all food establishments in Massachusetts that cook, prepare, or serve food intended for immediate consumption either on or off the premises."

If you are interested in more about the law, you can find information on the Massachusetts' Department of Public Health website. The legislation is identified as 105 CMR 590.009(H).