KEEGAN WERLIN LLP

ATTORNEYS AT LAW
265 FRANKLIN STREET
BOSTON, MASSACHUSETTS 02110-3113

(617) 951-1400

TELECOPIERS:
(617) 951-1354
(617) 951-0586

DAVID S. ROSENZWEIG
E-mail: drosen@keeganwerlin.com

March 6, 2017

M. Kathryn Sedor, Presiding Officer
Energy Facilities Siting Board
One South Station
Boston, MA 02110

Re: NSTAR Electric Company d/b/a Eversource Energy, EFSB 16-02/D.P.U. 16-77

Dear Ms. Sedor:

Enclosed please find the responses of NSTAR Electric Company d/b/a Eversource Energy to the first set of information requests issued by the Town of Needham in the above-referenced proceeding.

I have also enclosed a Certificate of Service. Thank you for your attention to this matter.

Very truly yours,

David S. Rosenzweig

Enclosures

cc: Mark D. Marini, Secretary, Department of Public Utilities
Service List

COMMONWEALTH OF MASSACHUSETTS
ENERGY FACILITIES SITING BOARD
DEPARTMENT OF PUBLIC UTILITIES

Petition of NSTAR Electric Company d/b/a Eversource Energy and New England Power Company d/b/a National Grid for Approval to Construct, a New 115-kV Overhead/Underground Transmission Line in West Roxbury, Dedham, and Needham Pursuant to G.L. c 164 § 69J and § 72	)	EFSB 16-02/D.P.U. 16-77

CERTIFICATE OF SERVICE

I certify that I have this day served the foregoing upon the Energy Facilities Siting Board and the Service List in the above-docketed proceeding in accordance with the requirements of 980 C.M.R. 1.03 (Siting Board's Rules of Practice and Procedure).

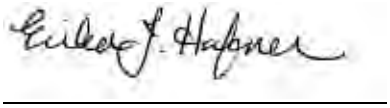

Erika J. Hafner, Esq.
Keegan Werlin LLP
265 Franklin Street
Boston, Massachusetts 02110
(617) 951-1400

Dated: March 6, 2017

COMMONWEALTH OF MASSACHUSETTS

ENERGY FACILITIES SITING BOARD
DEPARTMENT OF PUBLIC UTILITIES

NSTAR Electric Company d/b/a Eversource Energy	))))	EFSB 16-02/D.P.U. 16-77

AFFIDAVIT OF DOMENIC J. NICOTERA, P.E.

Domenic J. Nicotera, P.E., does hereby depose and say as follows:

I, Domenic J. Nicotera, P.E., on behalf of NSTAR Electric Company d/b/a Eversource Energy, certify that the discovery responses submitted herewith, which bear my name, were prepared by me or under my supervision and are true and accurate to the best of my knowledge and belief.

SIGNED UNDER THE PAINS AND PENALTIES OF PERJURY THIS 6th DAY OF MARCH, 2017.

Domenic J. Nicotera, P.E.

COMMONWEALTH OF MASSACHUSETTS

ENERGY FACILITIES SITING BOARD
DEPARTMENT OF PUBLIC UTILITIES

NSTAR Electric Company d/b/a Eversource Energy	))))	EFSB 16-02/D.P.U. 16-77

AFFIDAVIT OF DEMETRIOS SAKELLARIS, P.E.

Demetrios Sakellaris, P.E., does hereby depose and say as follows:

I, Demetrios Sakellaris, P.E., on behalf of NSTAR Electric Company d/b/a Eversource Energy, certify that the discovery responses submitted herewith, which bear my name, were prepared by me or under my supervision and are true and accurate to the best of my knowledge and belief.

SIGNED UNDER THE PAINS AND PENALTIES OF PERJURY THIS 6th DAY OF MARCH, 2017.

Demetrios Sakellaris

COMMONWEALTH OF MASSACHUSETTS

ENERGY FACILITIES SITING BOARD
DEPARTMENT OF PUBLIC UTILITIES

NSTAR Electric Company d/b/a Eversource Energy	))))	EFSB 16-02/D.P.U. 16-77

AFFIDAVIT OF CHRISTOPHER M. LONG, Sc.D., DABT

Christopher M. Long, Sc.D., DABT, does hereby depose and say as follows:

I, Christopher M. Long, Sc.D., DABT, on behalf of NSTAR Electric Company d/b/a Eversource Energy, certify that the discovery responses submitted herewith, which bear my name, were prepared by me or under my supervision and are true and accurate to the best of my knowledge and belief.

SIGNED UNDER THE PAINS AND PENALTIES OF PERJURY THIS 6th DAY OF MARCH, 2017.

Christopher M. Long, Sc.D., DABT

Information Request TON-1-1

Please refer to the Electric and Magnetic Field (EMF) Modeling Analysis for the West Roxbury to Needham Reliability Project (hereinafter, the "EMF Report"), Appendix 5-8 to the Analysis to Support Petitions before the Energy Facilities Siting Board. Appendix C the of EMF Report presents a diagram showing placement for the duct bank, and indicates that the bank would begin at approximately 30 inches below the pavement, and extend 32 inches below that, with the transmission lines spaced out over that 32 inches in an inverse diamond configuration.

(a) Did the Company review and utilize the as-built plans of sewer lines along the Company's preferred route and noticed alternative route, on file with the Town, in preparing Appendix C?

(b) Did the Company review and utilize the plans of gas lines along the Company's preferred route and noticed alternative route, prepared by its affiliate, NStar Gas Company, in preparing Appendix C?

(c) Did the Company consult with the Needham Town Engineer before preparing Appendix C?

(d) Please explain how the placement of the duct bank as shown in Appendix C will be reconciled with the location of existing utilities along the Company's preferred transmission route and its noticed alternative route.

(e) Specifically, in light of the location of existing utilities along the Company's preferred transmission route and its noticed alternative route, what is the realistic depth placement for the duct bank?

(f) Please provide a copy of the results of EMF modeling analysis using the depth placement for the duct bank specified in your response to TON-l- 001(e).

Response

(a) The Company did request and obtain as-built utility data for sewer and other town-owned utilities from the Town of Needham. This data is used to assist in

determining the most efficient available underground path for the duct bank depicted in Appendix C. This design effort is currently underway for the Preferred Route; at this time, the Company has not advanced a detailed design effort for the Noticed Alternative route.

(b) The Company did request and obtain as-built utility data for gas lines from its affiliate, NStar Gas Company; these as-builts were incorporated into the as-builts obtained from the Town of Needham. This data is also used to assist in determining the most efficient available underground path for the duct bank depicted in Appendix C. This design effort is currently underway for the Preferred Route; at this time, the Company has not advanced a detailed design effort for the Noticed Alternative route.

(c) Appendix C depicts the Company's typical detail for this type of proposed transmission line, i.e., XLPE cable conductors in concrete encased HDPE conduit. This detail was shared with the Needham Town Engineer, Manager, DPW Director and Parks and Recreation Director at coordination meetings in Q4 2015 and Q1 2016.

(d) As noted in the response to part (a), above, the Company is currently in the process of designing the transmission line for the Preferred Route. This design effort takes into account the existing utility information obtained to determine the most efficient available underground path for the duct bank. The duct bank alignment may cross under or above existing utilities, as well as maintaining minimum clearances away from existing utilities when in a parallel configuration in order to provide access to all existing utilities by the utility owner.

(e) The Company expects to place the ductbank at the depth indicated in Appendix C (approximately 62 inches below top of pavement) to the maximum extent practical. Field conditions and existing utilities may require some variation to this typical depth along the route.

(f) The actual depths of the underground duct banks in Needham are not yet known as the profile design has not been completed. However, the EMF modeling was done for the shallowest anticipated duct bank depth, namely, where the uppermost 115-kV phase conductors in the duct bank are located at 3.5 feet below grade. The EMF

modeling analysis therefore yielded the highest anticipated magnetic fields ("MF") above the duct bank (as given in Figure 3.6 of the Gradient EMF Report (Petition, Vol. II, App. 5-8)).

A duct bank identical to Needham's has been proposed for a Project for an underground ("UG") transmission line that connects a substation in Woburn to one in Wakefield (EFSB 15-04 / D.P.U. 15-140/15-141). An Information Request response in the record for that project (Exh. TOS-ED-10) provided the distribution of duct-bank depths for UG lines traversing streets in towns similar to what would be expected in Needham.

The response to Information Request TOS-ED-10 on duct bank depths showed that for about 65 percent of the route, the depth to the uppermost conductors was more than 5 feet, and for about 50 percent of the route, the depth to the conductors averaged 7.5 feet. The following graph shows the MF for average load levels for duct bank depths to the uppermost conductors of 3.5 feet (shallowest, Fig. 3.6 of the EMF Report), 5.5 feet, and 7.5 feet. The table after the graph gives numerical results for the peak MF, MF at ±20 feet either side of the circuit centerline, and the percentage reduction in MF at these locations that would be expected from increased duct depth.

Notably, for MF directly above the duct bank, increasing the depth decreases the MF by about 40 percent for every 2-foot increase in duct bank depth. But, the decrease in MF at locations lateral to the circuit centerline is less. That is, at ±20 feet to either side of the centerline, MF decreases only about 7 percent for every 2-foot increase in duct bank depth. At larger lateral distances, the percentage decrease is even less.

Finally, in terms of the Eversource Project's overall impact on EMF levels in Needham, it's important to note that transitioning one of the two overhead transmission circuits currently paralleling the railroad tracks to underground ducts will significantly lower EMF in the vicinity of the railroad tracks, and for those residences abutting the railroad tracks. Namely, peak magnetic fields under the existing lines will be reduced 55 percent (32 mG to 17 mG) and peak electric fields under the existing lines will be reduced 40 percent (2.6 kV/m to 1.6 kV/m).

**Graph of Magnetic Fields (MF) in Milligauss (mG) at Three Feet Above Grade,
for Underground (UG) Line Segments at Various Depths (Average Loading)**

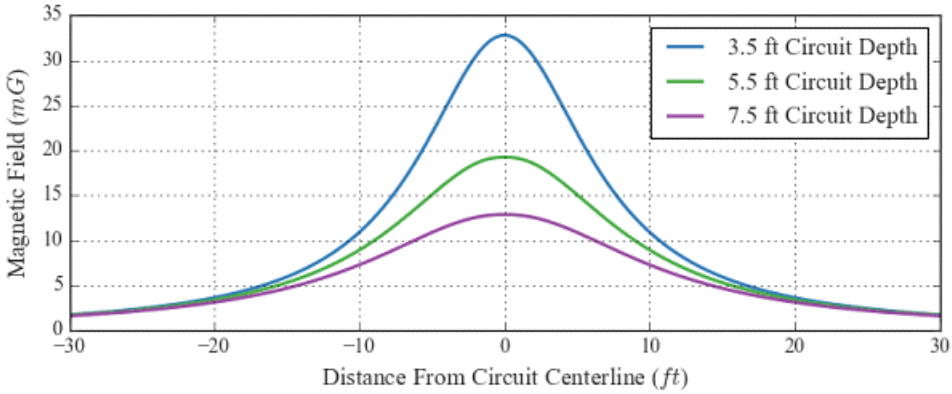

Table of Magnetic Field (MF) Levels in Milligauss (mG) at Three Feet Above Grade, for Underground (UG) Line Segments at Various Depths (Average Loading)

Depth of Uppermost Conductors	Max. MF, Directly Above Line	% of MF when Duct at Shallowest Depth	MF @ ± 20 ft to Side of Centerline	% of MF when Duct at Shallowest Depth
3.5 ft	33 mG	100%	3.62 mG	100%
5.5 ft	19 mG	60%	3.38 mG	93%
7.5 ft	13 mG	40%	3.11 mG	87%

Information Request TON-1-2

When will the Company provide the topographic field survey plan and profile and proposed design to the Town for review?

Response

The Company will provide a progress design set of plans, which will include plan and profile of the proposed design for the Preferred Route in Q2 2017. The Company will be prepared to meet with the Town of Needham at the Town's convenience thereafter to receive and address the Town's comments.

Information Request TON-1-3

For each of the 12 narrowest points along both the Company's preferred transmission route and its noticed alternative route, please provide the distance between the proposed location of the conduit and;

(a) The nearest property line;

(b) The nearest building foundation; and

(c) The nearest residential building foundation.

In your response, please identify the points along each route that were utilized for such measurements; property information, including Assessors' Map and Lot designations, for each property line utilized for such measurements; and the address and current use of the buildings utilized for such measurements.

Response

Attachment TON-1-3(1) depicts the 12 nearest property lines, building foundations (regardless of use) and/or residential building foundations to the approximate centerline of the proposed underground cable along with the other requested information (map and parcel, address, current use, etc). These measurements are based on GIS mapping data and are therefore considered approximate. Please also note there is some overlap between the referenced features; for example, 10 of the 12 nearest building foundations are also residential building foundations and four of the nearest building foundations are also located on the nearest property line.

Attachment TON-1-3(2) includes the same requested information for the Noticed Alternative Route. Because the Company does not have a preliminary design prepared for the Noticed Alternative Route that could be relied upon to obtain the requested measurements from the cable location, the Company relied upon the centerline of each street as a proxy for where the cable might be installed. As with the data presented on Attachment TON-1-003(1), these measurements are based on GIS mapping data and are therefore considered approximate. Please note that there are no building foundations (regardless of use) located closer to the Noticed Alternative Route's estimated cable location other than residential building foundations.

G:\Projects2\MA\Needham\4107\Baker2Needham\EFSB\IRs\Round2_Extension\TON1-3.mxd

Data Source: Office of Geographic Information (MassGIS), Commonwealth of Massachusetts, Information Technology Division

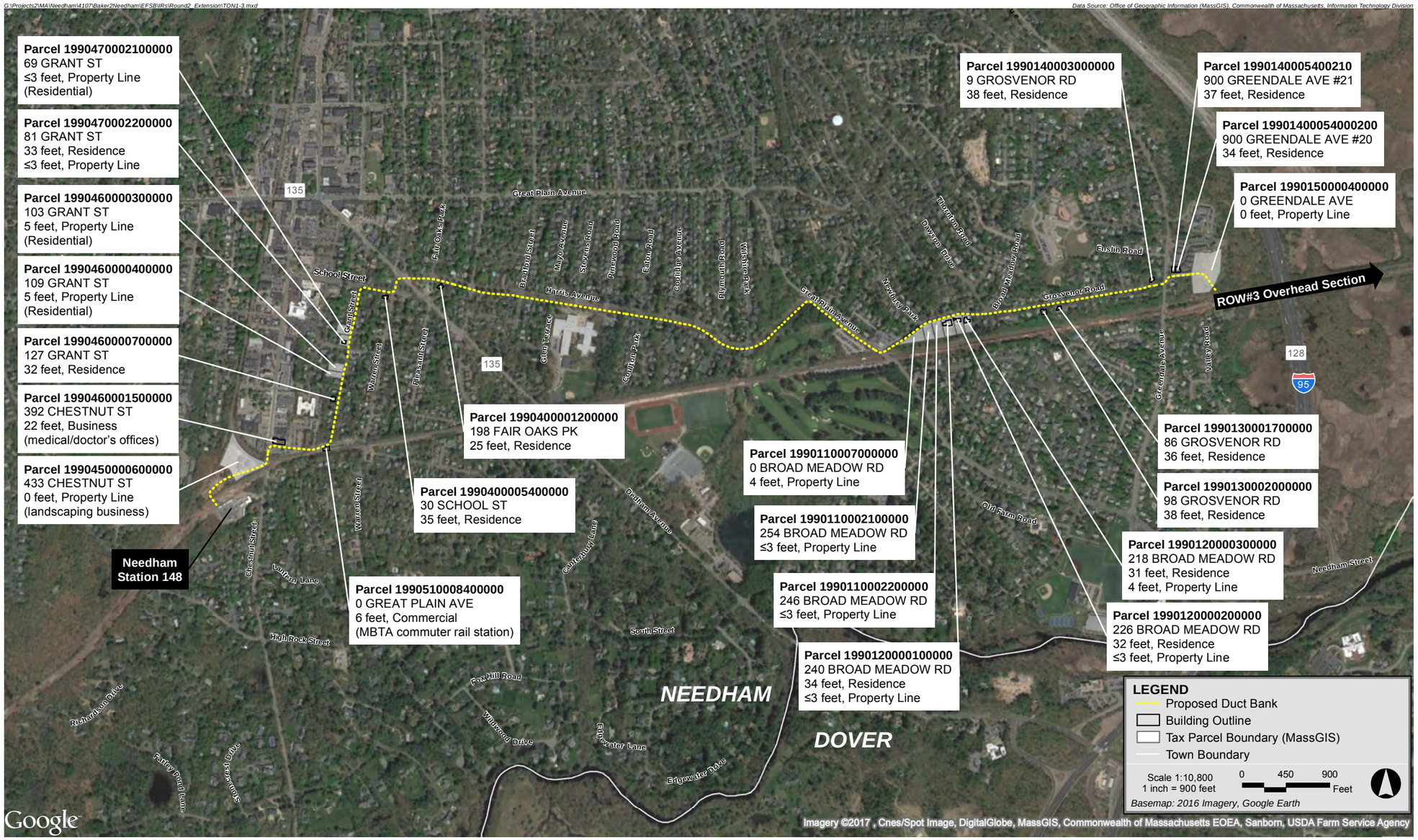

West Roxbury to Needham Reliability Project

EVERSOURCE

TON-1-3

Proximity to Proposed Conduit

G:\Projects2\MA\Needham\4107\Baker2Needham\EFSB\IRs\Round2_Extension\TON1-3_NA.mxd

Data Source: Office of Geographic Information (MassGIS), Commonwealth of Massachusetts, Information Technology Division

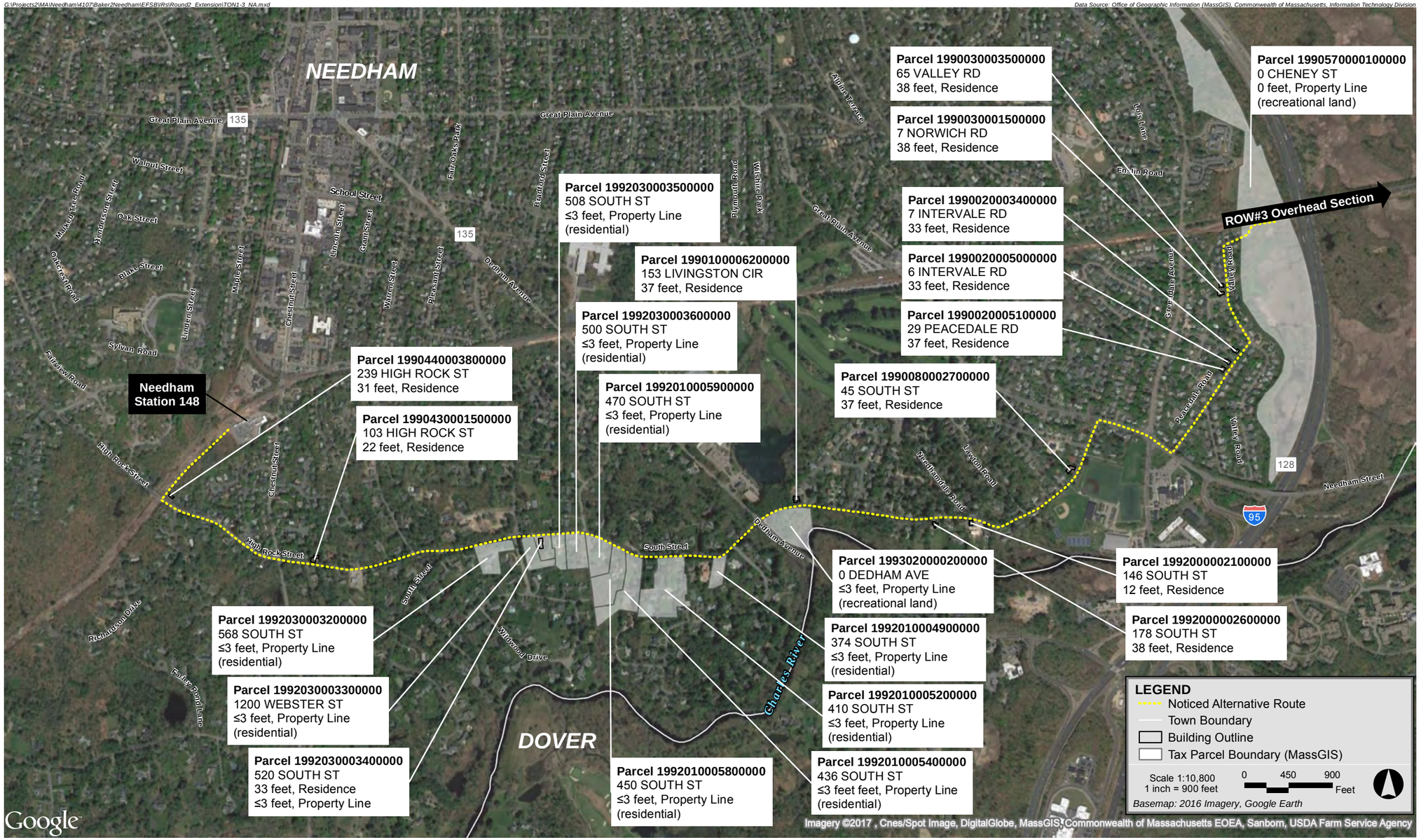

West Roxbury to Needham Reliability Project

EVERSOURCE

TON-1-3

Proximity to Noticed Alternative Route

Information Request TON-1-4

Please refer to your response to EFSB-LU-14. Please provide the distance between the actual proposed location of the conduit within the proposed route ROW and the 900 Greendale Avenue units referenced in your response.

Response

The requested measurements are provided on Attachment TON-1-4(1).

G:\Projects2\MA\Needham\4107\Baker2Needham\EFSB\IRs\Round2_Extension\TON1-4_REV1.mxd

Data Source: Office of Geographic Information (MassGIS), Commonwealth of Massachusetts, Information Technology Division

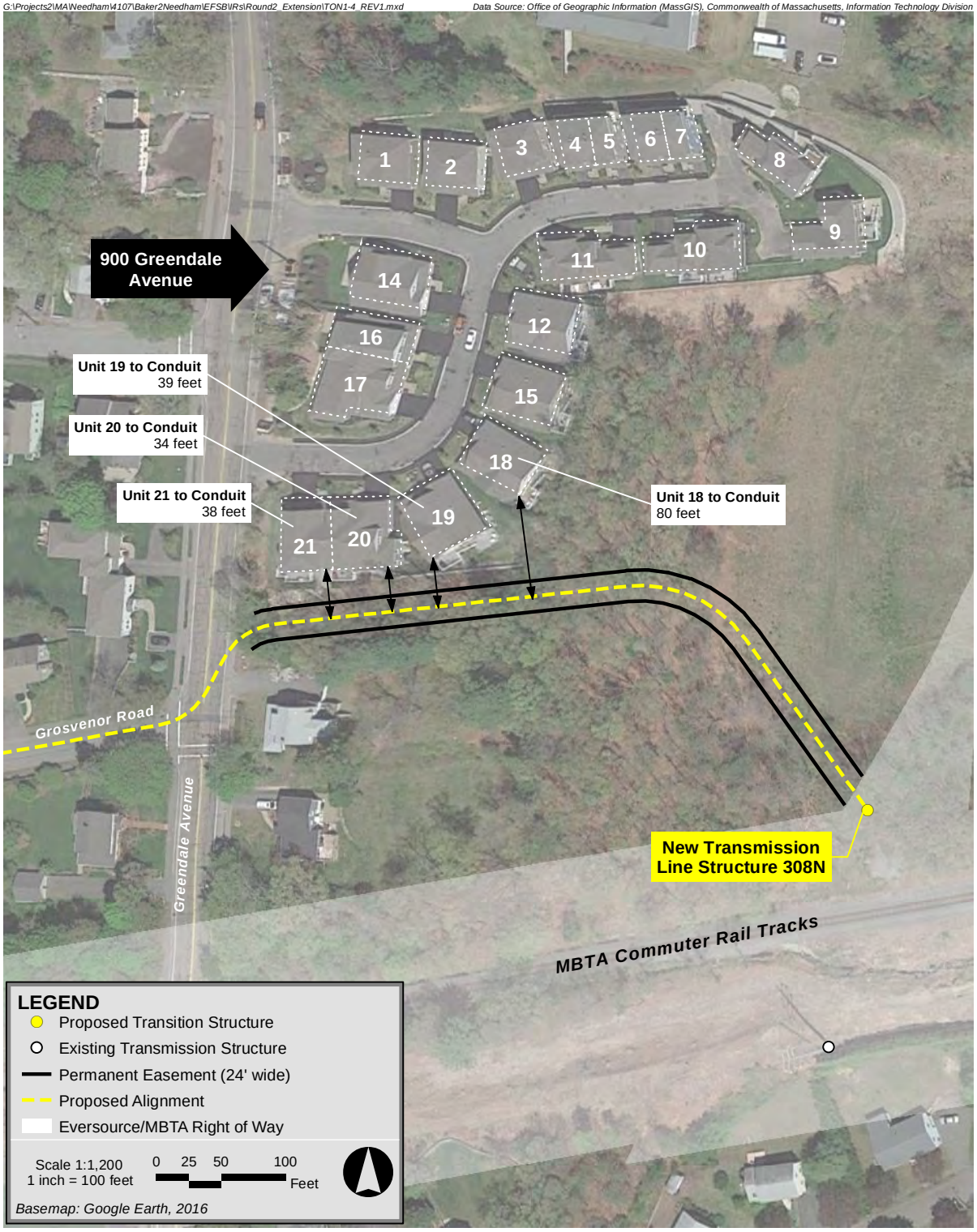

West Roxbury to Needham Reliability Project

EVERSOURCE

TON 1-4

Distance between Greendale Village Units and Conduit

Information Request TON-1-5

What is the Company's understanding of the relative effectiveness of HPFF piping, as compared to XLPE piping, in reducing mG exposure levels from EMF associated with electricity transmission lines? Please identify and provide copies of all documentation that the Company has relied on or otherwise considered in reaching this understanding.

Response

The construction of HPFF transmission lines involves the installation of steel piping to house the phase conductors. As a result of the phase conductors being within the same pipe, the proximity of the phase conductors in addition to the steel piping typically results in lower EMF levels at grade for HPFF installations when compared to XLPE installations at the same depth, voltage and current loading.

Demonstrations of shielding efficiency by ferromagnetic materials provide data showing that, for bundled 3-phase cables placed in steel pipes, magnetic fields have been reduced by approximately 10-fold compared to what is calculated for the same cables without the steel pipe ("Nantucket Cable Electric Company, Inc. Buried Transmission Line Demonstration." Report to Nantucket Cable Electric Company, Inc., Westborough, MA, 22p., March 1, 1994).

Please also see the response to Information Request TON-1-6.

Information Request TON-1-6

Please describe the factual basis for the Company's choice to utilize XLPE cables in for its proposed transmission line. Please identify and provide copies of all documentation that the Company relied on or otherwise considered in making this choice.

(a) What is the cost differential between HPFF cable and XLPE cable installation along the Company's preferred transmission route and its noticed alternative route?

(b) What is the effectiveness differential in EMF reduction between HPFF cable and XLPE cable installation along the Company's preferred transmission route and its noticed alternative route?

(c) Please provide the Company's cost-benefit or other analysis in support of its decision to utilize XLPE cable.

Response

Please see the Company's response to Information Request EFSB-PA-1 for a comparison between a single-circuit HVED (XLPE) system and a two-conductor per phase HPFF-PTC system with regard to the underground portion of the proposed transmission line. This comparison provides the factual basis for the Company's choice to utilize XLPE cables for the Project.

(a) Please see the Company's response to Information Request EFSB-PA-1, part f. At a conceptual level, the conceptual grade estimate does not differ based on the use of the Preferred Route or the Noticed Alternative Route.

(b) The Gradient EMF Report (Petition, Vol. II, App. 5-8) provides the EMF levels for the Project as designed, utilizing XLPE cables for the underground segments. As described in the Gradient EMF Report, the proposed XLPE transmission-line ducts will produce low levels of above-ground magnetic fields ("MF") that are well below international guideline levels for general-public MF exposure.

In general, when located at equal burial depths and when carrying equal current flows, HPFF cables will produce lower MF levels than those produced by XLPE

cables. This difference in MF value is due to two variations between the cable technologies. First, for HPFF cable technology, the three current-carrying conductors of a transmission line are spaced closer together than are the conductors for XLPE cable technology. The closer spacing makes the cancellation between each conductor's MF more efficient. Second, the magnetic properties of the steel pipe surrounding HPFF cables provides a degree of MF shielding that is absent in XLPE cable design, where the conductors are surrounded by plastic pipes and concrete. The Company has not modeled the EMF using an HPFF cable technology system along either the Preferred Route or the Noticed Alternative Route, because no such system is being proposed, none has been designed and the required current is not known.

When considering the potential for "EMF reduction" for HPFF cable technology *versus* XLPE cable technology, it also bears mentioning that:

(1) Both underground cable technologies result in rapidly decreasing MF magnitude with increasing distance from the circuit centerline.

(2) As compared to the existing overhead transmission and distribution lines in Needham, which have much larger distances between the three current-carrying conductors, the MF of both types of underground transmission line cables drop to low background levels over much shorter distances to either side; and

(3) As noted in the Company's corrected response to Information Request EFSB-MF-13, the epidemiology studies that analyzed the potential adverse health effects of EMF from underground transmission lines have reported an absence of any such effects. Although HPFF-PTC would likely provide a numerically lower value for magnetic fields than the XLPE design, the technologies are equivalent with regard to public health impact because the above-ground magnetic fields produced by both technologies are well below established public health guidelines.

(c) Please see the Company's response to Information Request EFSB-PA-1.

Information Request TON-1-7

Please refer to Section 4 of the EMF Report, which indicates that Gradient used the FIELDS modeling application for its modeling analysis.

(a) Did Gradient ever consider, or did the Company ever request, comparing the modeling scenarios presented in the EMF Report against a separate analysis using the MATLAB modeling application or another modeling package? If not, why not?

(b) If such a comparative analysis was conducted, please provide the results thereof and the Company's understanding of the significance of any differences noted between the alternative modeling and the results presented in the EMF Report.

(c) If Gradient considered, or the Company requested, such a comparative analysis, but no such analysis was, in fact, conducted, please provide the rationale for not conducting the analysis. Please identify and provide copies of all documentation that the Company relied on or otherwise considered in making this decision.

Response

(a) No. The Company did not request, nor did Gradient consider conducting, a comparative analysis of the model-predicted EMF values in the EMF Report that were obtained using FIELDS with the results of another commercially available EMF modeling package. This is because FIELDS is an industry-standard software package for predicting EMF strengths from both overhead and underground transmission lines. This program operates using Maxwell's equations, which accurately apply the laws of physics as related to electricity and magnetism. Results of the FIELDS model have been checked extensively against each other and against other software (e.g., "CORONA" from the Bonneville Power Administration, U.S. Department of Energy) to ensure that the implementation of the laws of physics are consistent. In these validation tests, program results for EMF were found to be in very good agreement with each other (Mamishev AV, Russell BD. 1995. "Measurement of Magnetic Fields in the Direct Proximity of Power Line Conductors." IEEE Transactions on Power Delivery, Vol. 10, No. 3, July 1995 1211-1216).

(b) Not applicable given the Company's response to subpart (a), above.

(c) Not applicable given the Company's response to subpart (a), above.

Information Request TON-1-8

Did Gradient conduct a modeling analysis that compares EMF levels from its preferred transmission route and its noticed alternative route?

(a) If not, why not?

(b) If such a comparative analysis was conducted, please provide the results thereof and the Company's understanding of the significance of any differences noted between the preferred transmission route and its noticed alternative route.

Response

(a) No, Gradient did not conduct a modeling analysis comparing EMF levels for the Preferred *versus* the Noticed Alternative routes. As discussed in the response to Information Request TON-1-2, the Project design has not been completed. The EMF Report (Petition, Vol. II, App. 5-8) provides model-predicted magnetic field ("MF") values associated with the shallowest anticipated duct-bank burial depth of a representative segment of the 110-522 underground circuit. These MF values represent the highest anticipated MF that are projected to occur above a duct bank along either the preferred and alternative routes, given that the underground duct bank envisioned for the Needham underground circuit is projected to be in the same configuration everywhere along both the preferred and alternative routes (with the exception of manhole sections). In addition, the fall-off of MF magnitude with lateral distance away from the circuit centerline described by these MF modeling results is expected to be the same regardless of route. In other words, these modeling results can be used to obtain the expected magnetic field at a given location along either the Preferred or Noticed Alternative Route by simply knowing how far laterally the location of interest is from the circuit centerline.

(b) Please see the response to part (a), above.

Information Request TON-1-9

Did the Company or any of its consultants perform modeling of projected EMF levels along the narrowest portions of the preferred transmission route and its noticed alternative route?

(a) If not, why not?

(b) If such modeling was conducted, please provide the results thereof and the Company's understanding of the significance of any differences noted between EMF levels at the nearest property lines, building foundations and residential building foundations identified in your response to TON 1-002 and those presented in the EMF Report.

Response

(a) No, Eversource's consultant, Gradient, did not perform modeling to specifically characterize projected EMF levels along the narrowest portions of the Preferred Route and the Noticed Alternative Route. However, the EMF modeling results provided in the Gradient EMF Report (Petition, Vol. II, App. 5-8) have relevance to all Project underground line segments, including those along the narrowest portions of the Preferred Route and the Noticed Alterative Route. The EMF Report provides model-predicted magnetic field ("MF") values associated with the shallowest anticipated duct-bank burial depth of a representative segment of the 110-522 underground circuit. These MF values represent the highest anticipated MF that are projected to occur above a duct bank along either the preferred and alternative routes, given that the underground duct bank envisioned for the Needham underground circuit is projected to be in the same configuration everywhere along both the preferred and alternative routes (with the exception of manhole sections). In addition, the fall-off of magnetic field magnitude with lateral distance away from the circuit centerline described by these MF modeling results is expected to be the same regardless of route or route segment. In other words, these modeling results can be used to obtain the expected magnetic field at a given location along either the preferred or noticed alternative route by simply knowing how far laterally the location of interest is from the circuit centerline.

(b) Not applicable given the Company's response to subpart (a).

Information Request TON-1-10

Did the Company or any of its consultants perform modeling of projected EMF levels at the 900 Greendale Avenue residences?

(a) If not, why not?

(b) If such modeling was conducted, please provide the results thereof and the Company's understanding of the significance of any differences noted between EMF levels at the 900 Greendale Avenue residences and those presented in the EMF Report.

Response

(a) No, Eversource's consultant, Gradient, did not perform modeling to specifically characterize projected EMF levels at the 900 Greendale Avenue residences. However, the EMF modeling results provided in the Gradient EMF Report (Petition, Vol. II, App. 5-8) have relevance to all Project underground line segments, including those nearby to the 900 Greendale Avenue residences. The EMF Report provides model-predicted magnetic field ("MF") values associated with the shallowest anticipated duct-bank burial depth of a representative segment of the 110-522 underground circuit. These MF values represent the highest anticipated MF that are projected to occur above a duct bank along either the preferred and alternative routes, given that the underground duct bank envisioned for the Needham underground circuit is projected to be in the same configuration everywhere along both the preferred and alternative routes (with the exception of manhole sections). In addition, the fall-off of magnetic field magnitude with lateral distance away from the circuit centerline described by these MF modeling results is expected to be the same regardless of underground line segment. In other words, these modeling results can be used to obtain the expected magnetic field at a given location along either the preferred or noticed alternative route, such as at the 900 Greendale Avenue residences, by simply knowing how far laterally the location of interest is from the circuit centerline.

(b) Not applicable given the Company's response to subpart (a).

Information Request TON-1-11

Did the Company or any of its consultants perform modeling of projected EMF levels at the residences on Grosvenor Street along the preferred transmission line route?

(a) If not, why not?

(b) If such modeling was conducted, please provide the results thereof and the Company's understanding of the significance of any differences noted between EMF levels at the residences on Grosvenor Street and those presented in the EMF Report.

Response

(a) No, Eversource's consultant, Gradient, did not perform modeling to specifically characterize projected EMF levels at the residences on Grosvenor Street along the preferred transmission line route. However, the EMF modeling results provided in the Gradient EMF Report (Petition, Vol. II, App. 5-8) have relevance to all Project underground line segments, including those nearby to the residences on Grosvenor Street. The EMF Report provides model-predicted magnetic field ("MF") values associated with the shallowest anticipated duct-bank burial depth of a representative segment of the 110-522 underground circuit. These MF values represent the highest anticipated MF that are projected to occur above a duct bank along either the preferred and alternative routes, given that the underground duct bank envisioned for the Needham underground circuit is projected to be in the same configuration everywhere along both the preferred and alternative routes (with the exception of manhole sections). In addition, the fall-off of magnetic field magnitude with lateral distance away from the circuit centerline described by these MF modeling results is expected to be the same regardless of underground line segment. In other words, these modeling results can be used to obtain the expected magnetic field at a given location along either the preferred or noticed alternative route, such as at the residences on Grosvenor Street, by simply knowing how far laterally the location of interest is from the circuit centerline.

(b) Not applicable given the Company's response to subpart (a).

Information Request TON-1-12

Please refer to Section 3.4.2 of the EMF Report, which indicates that the level of EMF is significantly higher above manholes than it is on standard line segments.

(a) What are the logistical considerations that apply to placement decisions for manholes?

(b) Has the Company sited its proposed manhole locations such that the manholes are on segments of the installation route where the setbacks between the middle of the street and adjacent residences is greater than average along the proposed transmission route? If not, why not?

Response

(a) Logistical considerations and criteria taken into account in determining the proposed locations for manholes may include, but are not necessarily limited to, the following: minimizing the number of manholes required along the route, minimizing bends, limitations on the length of cable available on the reel and accommodating existing utility constraints in the roadways.

(b) Specific to the Project, effort was made to locate manholes along streets that were greater in width (for example, Harris Avenue) to greater facilitate the successful installation and future operation of the cables. The number and location of existing utilities will ultimately determine where the manhole can be installed within the roadway. Upon the completion of more definitive field work (test pitting), a more informative decision can be made with regard to the spacing from the edge of the manhole sidewall and the edge of the street.

Information Request TON-1-13

Has the Company ever sponsored a pre-construction EMF monitoring study along a proposed underground transmission route comparable to the Company's preferred alternative or noticed alternative route?

(a) If not, why not?

(b) Please provide the reports of any such studies conducted within the past five years or the three most recent studies (whichever is the greater number).

Response

Eversource has conducted pre-construction measurements of electric and magnetic fields along underground transmission line projects as required by the application guidelines for the Connecticut Siting Council. The three most recent underground transmission line projects that were subject to these requirements (listed from the most recent) are the Stamford Reliability Cable Project, the Glenbrook Cables Project and the Middletown Norwalk Project. Additional, project-specific pre-construction measurements were ordered for the Middletown Norwalk 345-kV Transmission Line Project by the Council in Docket 272. This information can be found online and internet addresses are listed below for the respective projects.

Stamford Reliability Cable Project (CSC Docket 435): Page I-8 through I-13 of the Application
http://www.ct.gov/csc/lib/csc/pendingproceeds/docket_435/_srcp_final_csc_application_1_17_13.pdf

Glenbrook Cables Project (CSC Docket 292): Pages 5-8 of Attachment E in Volume II of the Application
http://www.transmission-nu.com/transcommon/pdfs/Glenbrook/siting/Glenbrook%20Volume%202%20Complete.pdf

Middletown-Norwalk 345-kV Transmission Line (CSC Docket 272)
http://www.ct.gov/csc/cwp/view.asp?a=3&q=453782

Information Request TON-1-14

Has the Company ever sponsored a post-construction EMF monitoring study along an underground transmission route comparable to the Company's preferred alternative or noticed alternative route?

(a) If not, why not?

(b) Please provide the reports of any such studies conducted within the past five years or the three most recent studies (whichever is the greater number).

Response

Eversource has conducted post-construction measurements of electric and magnetic fields along underground transmission line projects as required by the Decision & Order of the Connecticut Siting Council for these projects. The three most recent underground transmission line projects that were subject to these requirements (listed from the most recent) are the Stamford Reliability Cable Project, the Glenbrook Cables Project and the Middletown Norwalk Project. Reports for the Stamford Reliability Cable Project and the Middletown-Norwalk Project are available online and web addresses are included. The report for the Glenbrook Cables Project is attached hereto.

Stamford Reliability Cables Project (CSC Docket 435)
http://www.ct.gov/csc/lib/csc/pendingproceeds/docket_435/development/dkt435_emfmonitoringrpt_001.pdf

Glenbrook Cables Project (CSC Docket 292)
Please see Attachment TON-1-14(1).

Middletown Norwalk 345-kV Transmission Line Project (CSC Docket 272)
http://www.ct.gov/csc/cwp/view.asp?a=3&q=453782

Connecticut Light & Power
The Northeast Utilites System

January 29, 2010

Mr. Daniel Caruso, Chairman
Connecticut Siting Council
Ten Franklin Square
New Britain, CT 06051

RE: Docket 292: Post-construction EMF Monitoring Report

Dear Chairman Caruso:

The Connecticut Light and Power Company hereby files the enclosed original and six (6) copies of the Post-construction EMF Monitoring Report for the Glenbrook Cables Project.

If you need any further information, please call me at 860-665-2365.

Sincerely,

Mark A. Smith
Glenbrook Cables Project Manager

Attachment

cc: Fred Cunliffe – Supervisory Siting Analyst, Connecticut Siting Council
Service List (w/o attachment)

glenbrook cables

Connecticut Light & Power
The Northeast Utilites System

POST-CONSTRUCTION EMF MONITORING REPORT FOR THE GLENBROOK CABLES TRANSMISSION LINE PROJECT

January 29, 2010

Measurements and Report By:

Exponent, Inc.
420 Lexington Ave., Suite 1740
New York, NY 10170

glenbrook cables

TABLE OF CONTENTS

1.0 Introduction 1

2.0 Sources of Electric and Magnetic Fields 1

3.0 Duct-bank configuration 2

4.0 Methods 5

5.0 Measurement Locations 6

6.0 Post-Construction EMF Measurements 7

6.1 Magnetic-field Measurements at Monitoring Locations 7

6.1.2 Spot Measurements 8

6.2 Magnetic-field Measurements at Splice Vaults 8

6.3 Magnetic-field Measurements along Underground Route 9

6.4 Substation Measurements 10

7.0 Discussion 11

8.0 Conclusion 14

APPENDICES

A. Council-Approved EMF Monitoring Plan

B. Map and Post-Construction Aerial Photographs of Monitoring Locations

C. Calculated and Measured Magnetic Fields at the Monitoring Locations

D. Measured Magnetic Field Levels along the Underground Cable Route

E. Measured EMF Levels at the Norwalk Substation and Glenbrook Substation

F. References

1.0 Introduction

Connecticut Light & Power (CL&P) has constructed 8.7 miles of new 115-kV underground transmission cables between the Glenbrook and Norwalk Substations pursuant to the Connecticut Siting Council's (Council) approvals of Development and Management Plans on September 5, 2006 and September 29, 2006.[1] In addition, CL&P has modified terminal buswork in the Glenbrook and Norwalk Substations in accordance with Development and Management Plan approvals granted on December 14, 2006 and January 19, 2007.[2]

The Council's Development and Management Plan approvals include a condition that "CL&P shall provide the Council a post-construction magnetic field monitoring plan, for approval, prior to the commencement of operation." An EMF Monitoring Plan, which addressed electric and magnetic fields along the project route and at the substation perimeters, was submitted to the Council on May 5, 2008 and is attached as Appendix A. At a public meeting held on June 5, 2008, the Council considered and approved the EMF Monitoring Plan "with the recommendation that the final report include conductor size, line loading, an aerial photograph (1 inch equals 100 feet) identifying locations of existing electric lines and marking measurement locations and comparison with predicted values."

This report summarizes the measurements of electric and magnetic fields (EMF) associated with the Glenbrook Cable transmission facilities as described in the EMF Monitoring Plan. The purpose of these measurements is to confirm pre-construction estimates of field levels, which were based on measurements and calculations. Additionally, magnetic fields at 10 of the sites in the EMF Monitoring Plan were re-calculated using as-built duct configurations and actual current flows at the time of the post-construction measurements at these 10 sites. In section 7.0 of this report, the post-construction measurements at these ten (10) sites are compared with the magnetic field values calculated both before construction (using a nominal duct-bank configuration and loading) and after construction (using as-built duct-bank configurations and actual currents).

2.0 Sources of Electric and Magnetic Fields

Electric fields are the result of voltages applied to electrical conductors and equipment. Since utility installations are designed to operate at a specific voltage, electric fields from utility sources are stable over time. In addition to the Glenbrook transmission line and the equipment added to substations, there are additional sources of power-frequency fields along the project route including electric distribution and transmission conductors not associated with the project. Most conductive materials – including fences, shrubbery, buildings, soil, and the metallic cladding of the underground conductors – block electric fields. For this reason, the underground 115-kV lines constructed as part of the project are not a source of electric fields above ground.

---

[1] Docket No. 292: September 5, 2006 approval of Segment 1 of the Project Development and Management (D&M) Plan and September 29, 2006 approval of Segment 2 of the Project D&M Plan.

[2] Docket No. 292: December 14, 2006 approval of the D&M Plan for modifications to the Norwalk Substation and January 19, 2007 approval of the D&M Plan for modifications to the Glenbrook Substation.

Sources of power-frequency electric fields associated with the project include cable risers and buswork at the Glenbrook Substation and the Norwalk Substation. Section 6.4 summarizes measurements in the vicinity of cable risers to show how electric fields outside the substation perimeters are affected by the new construction.

Magnetic fields are produced by the flow of electric currents and therefore vary over time as the demand for electric power fluctuates. Unlike electric fields, most materials do not readily block magnetic fields. The level of the magnetic field at any point depends on characteristics of the source, including the arrangement of conductors, the amount of current flow through the source, and its distance from the point of measurement. As for electric fields, the intensity of magnetic fields diminishes with increasing distance from the source.

Sources of magnetic fields not associated with the project include transmission and distribution lines and currents flowing on other conductors of electricity, such as communication cables and water pipes. The major sources of power-frequency magnetic fields associated with the project are the cable system beneath streets and equipment within the associated substations. Section 6.0 summarizes measurements for these project-related sources, including:

(1) Measurements of magnetic fields at monitoring locations per the EMF Monitoring Plan;

(2) Longitudinal measurements of magnetic fields along the route of the underground 115-kV cables;

(3) Measurements of the magnetic field in an area over representative splice vaults along the project route; and

(4) Magnetic field measurements around the perimeters of the Glenbrook and Norwalk Substations.

It is important to remember that measurements of the magnetic field present a snapshot of the conditions at a point in time. Within a day, or over the course of months, and even seasons, the magnetic field can change depending upon the amount and the patterns of power demand and the generation dispatch within the surrounding region. Moreover, measurements at any specific location include the contribution from numerous, time-varying sources that are not associated with the project.

3.0 Duct-bank configuration

In support of CL&P's 2004 Application to the Council, Power Delivery Consultants (PDC) calculated the magnetic fields for the conceptual design of the 115-kV underground cable system depicted in Figure 1. In the conceptual design, the cables are installed in concrete-encased 8-inch ducts with 11.9-inch spacings, center to center. A spare set of ducts was included for potential future use. At the minimum duct-bank burial depth, the 115-kV conductors are located 43 inches below grade. PDC modeled the effects of ground continuity conductors (GCCs) 9 inches directly above the 115-kV phase conductors.

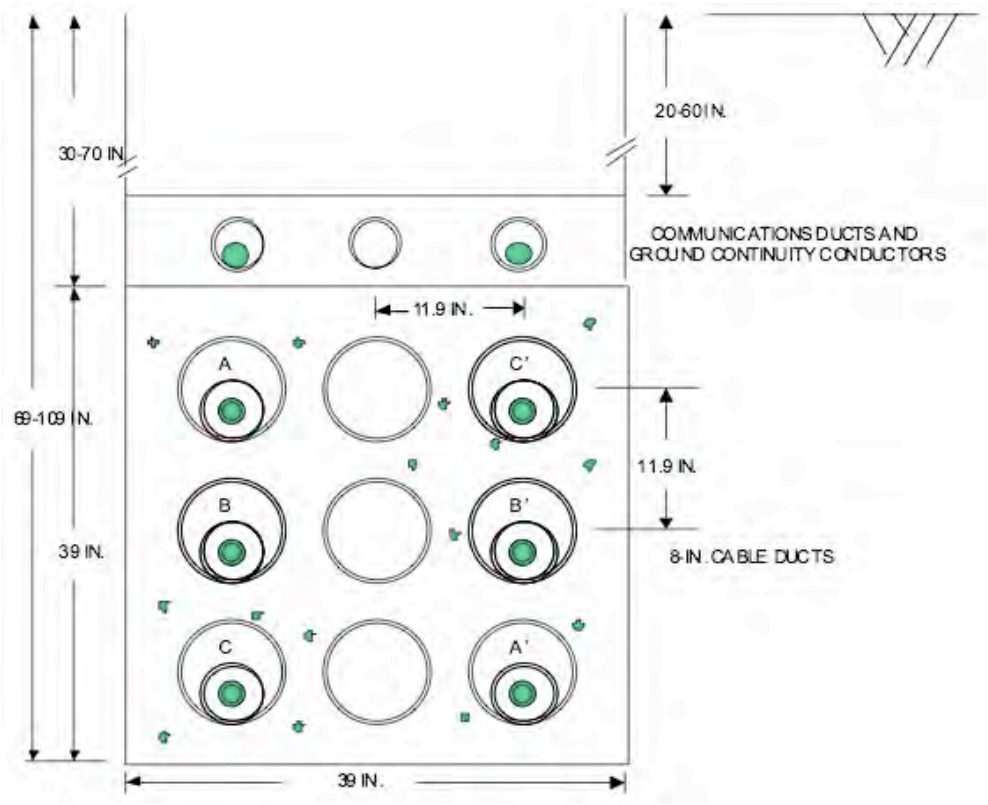

Figure 1. Conceptual duct-bank design from CL&P's application to the Council.

As built, the 115-kV duct bank differs from the conceptual design in conduit spacing, burial depth, and GCC position. The vertical double-circuit arrangement of phase conductors depicted in Figure 1, moreover, was altered in isolated sections to avoid existing utilities.

Figure 2 depicts two typical as-built duct-bank sections with a vertical double-circuit arrangement of phase conductors. The conduit spacing varies between 12 and 15 inches, and at the minimum duct-bank burial depth of 3 feet, the top 115-kV conductors are located approximately 44 inches or more below grade. In the majority of locations, the GCC ducts abut the 115-kV phase ducts, and are offset horizontally from the phase-duct centerlines. This case is depicted on the right side of Figure 2. In some locations, such as Brookside Drive in Darien, the GCC ducts are located 12 inches above the 115-kV phase ducts, center to center. This case is depicted on the right side of Figure 2.

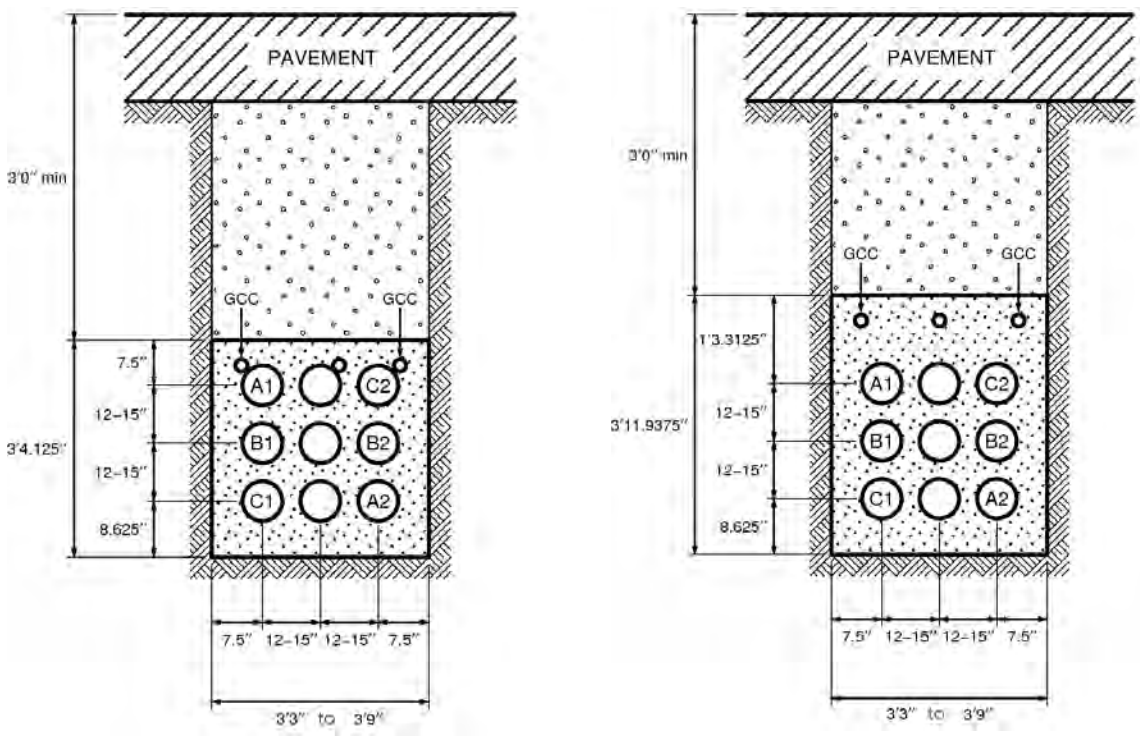

Figure 2. Two as-built duct-bank sections with a vertical double-circuit arrangement of phase conductors (not to scale).

Figure 3 depicts a duct-bank section altered to accommodate existing utilities in isolated sections of the project route. The vertical double-circuit arrangement of phase conductors depicted in Figure 1 was replaced with a broader 2×5 arrangement of ducts in these sections. The configuration of Figure 3 was constructed north of the Glenbrook Substation along parts of Hamilton Avenue, where existing underground electric utilities prevented construction of the nominal 3×3 design.

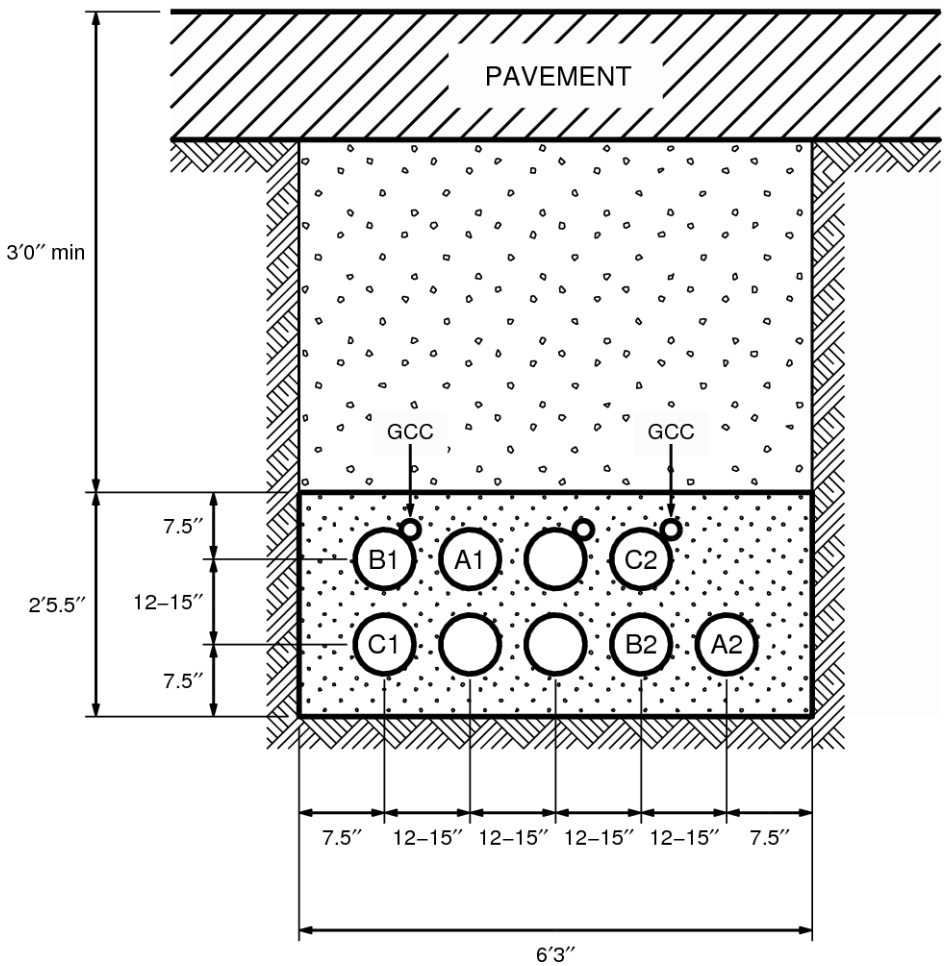

Figure 3. An as-built duct-bank section with a 2×5 arrangement of ducts designed to pass beneath existing utilities.

4.0 Methods

Magnetic field measurements were recorded at a height of one meter (3.28 feet) above ground in accordance with standard methods for measuring near power lines (IEEE Std. 644-1994a). Both electric and magnetic fields were expressed as the total field computed as the resultant of field vectors measured along vertical, transverse, and longitudinal axes.[3] The magnetic field was measured in units of milligauss (mG) by orthogonally mounted sensing coils whose output was recorded by a digital meter (EMDEX II) manufactured by Enertech Consultants. Electric fields during operation were measured in units of kilovolts per meter (kV/m) with a single-axis sensor accessory for the Emdex II meter. Before operation commenced, electric fields were measured in units of kV/m with a single-axis electric field meter manufactured by Electric Field

[3] Measurements along the vertical, transverse, and longitudinal axes were recorded as root-mean-square (rms) magnitudes. RMS refers to the common mathematical method of defining the effective voltage, current, or field of an alternating current (AC) system.

Measurements. These instruments meet the Institute of Electrical and Electronics Engineers (IEEE) instrumentation standard for obtaining accurate field measurements at power line frequencies (IEEE Std.1308-1994b). The meter and the electric field probe were calibrated by the manufacturer by methods like those described in IEEE Std. 644-1994a.

CL&P reported power flows and voltage on the cables at the time of electric and magnetic field measurements. Exponent used these monitored conditions to assess the stability of readings, and to include in calculations of site-specific magnetic fields based on measured loadings. Site-specific magnetic field levels were calculated using computer algorithms developed by the Bonneville Power Administration (BPA, 1991). The inputs to the BPA program include data regarding voltage, current flow, circuit phasing, and conductor configurations. The resultant magnetic fields associated with a particular loading are then calculated along transects perpendicular to the duct-bank centerline. These profiles describe the magnetic field produced by the underground cables with a uniform duct-bank cross-section[4] and balanced three-phase currents.

The 115-kV underground transmission circuit was installed with six (6) XLPE cables, each with a 3500-kcmil copper conductor. Above the 8-inch diameter phase ducts containing the XLPE cables, two 400-kcmil GCCs were installed in separate 2-inch ducts. The spacing of the phase ducts and GCC ducts varies along the project route, and is depicted at each measurement location with a cross-section in Appendix C. The effects of the GCCs were included in the calculations, with induced currents calculated using the ENVIRO program using algorithms developed at the Electric Power Research Institute (EPRI) Power Delivery Center.

Magnetic field measurements along the project route were also recorded at 3-second intervals along lane centerlines in the roadway for all portions of the route (1) between Glenbrook Substation and Brookside Drive at the I-95 Service Area, and (2) between Norwalk Substation and the intersection of Ledge Road and Noroton Avenue. These longitudinal measurements are representative of the magnetic fields along the duct bank, but in some locations are parallel and adjacent to the duct bank. Longitudinal magnetic field measurements were collected by the EMDEX II meter as time-series data, and resolved to position using a synchronized GPS recorder.

5.0 Measurement Locations

Appendix B presents a map of the project route indicating the 16 monitoring locations previously identified in the EMF Monitoring Plan. Aerial photographs of the monitoring sites are also included in Appendix B.

The route extends north and then east from the Glenbrook Substation. In Stamford, the proposed route aligns with Hamilton Avenue and Brookside Drive before crossing the Noroton River into Darien. In Darien, the route continues east under an access road behind a Connecticut Department of Transportation service area for I-95, and then under an access road

[4] A “uniform cross-section” means that the BPA algorithms model the underground cables at a uniform burial depth below grade.

between the Noroton Heights railroad station and I-95. The route continues east-northeast along Ledge Road before joining U.S. Route 1 (Boston Post Road) and proceeds north-northeast for about 900 feet.

The route then diverges from U.S. Route 1, first traversing south under Corbin Drive and then turning east–northeast along Old Kings Highway before crossing beneath the Metro-North/Amtrak Railroad. On the east side of the railroad corridor, the route crosses under parking areas and Sedgewick Avenue before reconnecting to U.S. Route 1.

The route continues north-northeast along U.S. Route 1 through Darien and into Norwalk. In Norwalk, the route traverses east-northeast under U.S. Route 1 (Connecticut Avenue and then Van Buren Avenue), before continuing north under Riverside Avenue. From Riverside Avenue, the route then crosses beneath the Norwalk River to the Norwalk Substation.

Along this route, CL&P chose monitoring locations representative of the underground portions of the route at different burial depths and duct spacings. The monitoring sites include representative cross sections of the underground duct bank in the City of Stamford, Town of Darien, and City of Norwalk. CL&P chose at least two readily accessible measurement sites for magnetic field cross sections in each of these municipalities traversed by the line.

CT Public Act 04-246 identifies “statutory facilities” as “residential areas, private or public schools, licensed child daycare facilities, licensed youth camps, or public playgrounds” that are “adjacent” to the proposed facility. During the Council’s proceedings for the project, CL&P identified numerous statutory facilities along the project route and its alternatives. CL&P reviewed the list of statutory facilities identified during the Council proceedings, and chose those facilities closest to the route under construction for site-specific measurements. The EMF Monitoring Plan in Appendix A includes the designation and type of listed facilities selected for monitoring.

To the extent possible, CL&P chose measurement locations where: (1): the terrain is relatively flat and bare of vegetation; (2) conductor configurations and burial depths are typical and representative; and (3) few if any confounding sources, such as distribution lines, exist.

6.0 Post-Construction EMF Measurements

6.1 Magnetic Field Measurements at Monitoring Locations

Project-related magnetic fields were measured during operation on December 10, 2008 and February 11, 2009, when the underground circuits were carrying a combined load between 100 and 180 MVA. The actual loads on December 10, 2008 and February 11, 2009 were recorded during the measurement period by CL&P, and are within ±35% of the 134 MVA (average-load) case from the assessment made in CL&P’s Application.

6.1.1 Cross-section Measurements

The magnetic field of the underground cables was monitored at 16 locations along the route. Appendix C depicts the measurements along profiles perpendicular to the centerline of the

underground duct bank at 14 of the monitoring locations. At the remaining 2 sites, spot measurements were performed and the results are summarized below. Calculated magnetic fields presented in Appendix C are based on site-specific conditions, including input data related to the conductor burial depth and current flow on the lines at the time each measurement was made. Where a uniform cross-section could be modeled for purposes of the magnetic field calculation, the cross-section dimensions are depicted in Appendix C.

6.1.2 Spot Measurements

At two of the monitoring locations in Appendix C – Location F (8 Old Kings Highway in Darien) and Location N (11 Spring Hill Avenue in Norwalk) – the magnetic field was reported as a spot reading rather than as a profile because these monitoring sites were more than 200 feet from the project route. Both locations are at a distance from the duct bank for which project-related sources of magnetic fields cannot be modeled accurately with a uniform cross-section. Based upon measurements in areas adjoining the project route with few extraneous sources,[5] project-related magnetic fields at these monitoring locations are below 1.0 mG, a value comparable to or below background levels in residential and commercial areas.

6.2 Magnetic Field Measurements at Splice Vaults

In the vicinity of splice vaults, the underground 115-kV cables are further apart than within the duct bank. CL&P measured the magnetic fields above ground associated with this increased cable separation. Measurements in Appendix C at Location J (the Wal-Mart parking lot at 680 Connecticut Ave., Norwalk) and Location K (Jerry's Upholstery, Inc. at 67 Connecticut Avenue, Norwalk) characterize the magnetic fields encountered along a transect across splice vaults. Figure 4 presents a comparison of the measured magnetic fields above splice vaults at location J (the Wal-Mart parking lot at 680 Connecticut Ave., Norwalk) and above a typical trench section at Location G (parking lot near Mechanic Street in Darien). The profiles in Figure 4, which were measured for similar burial depths, show that magnetic fields above splice vaults are approximately 2.5 times higher than above trench sections, but can approach comparable levels at a distance of 25 feet from the cables.

[5] *Cf.*, Monitoring Location G, a parking lot in the vicinity of Mechanic St. in Darien, which is offset approximately 100 feet from Location F, at which a spot measurement was recorded. The readings at Location G are below 0.7 mG at a distance of approximately 200 feet from the duct-bank centerline. Calculated magnetic fields at average loading (for the minimum burial depth at location G) are below 0.7 mG at distances greater than 100 feet from the duct-bank centerline.

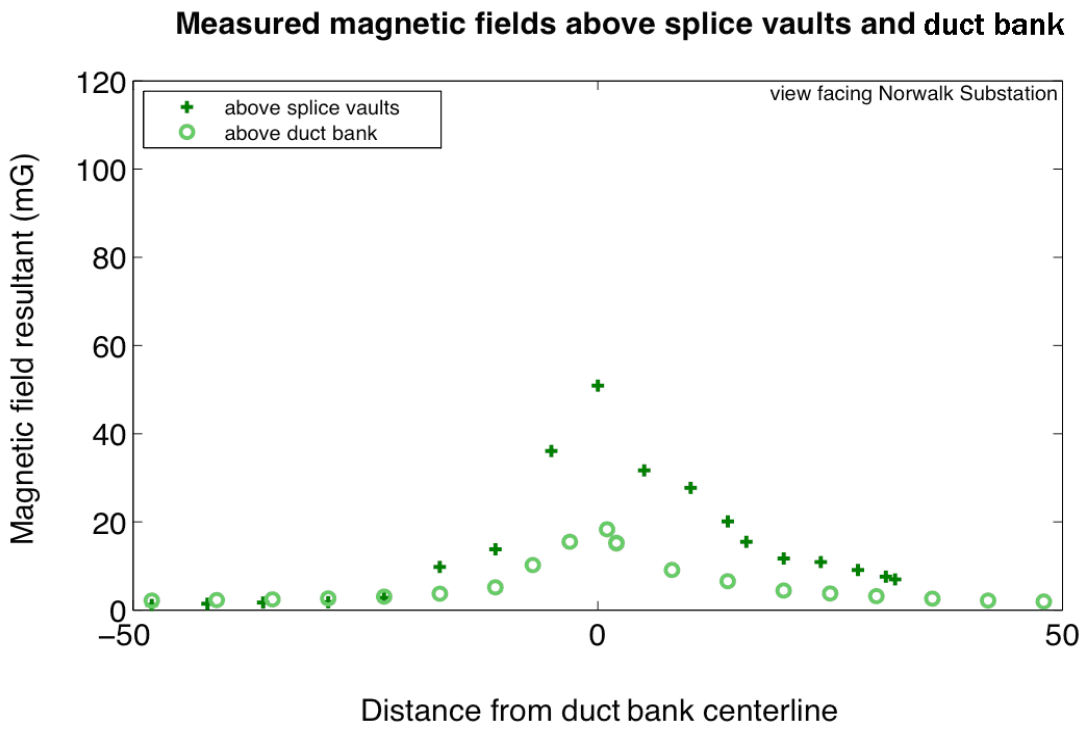

Figure 4. Comparison of measured magnetic fields above splice vaults at Location J (the Wal-Mart parking lot at 680 Connecticut Ave., Norwalk) and above a typical trench section at Location G (parking lot near Mechanic Street in Darien). The burial depth of the splice vaults and the duct-bank in both cases is 4½ feet.

6.3 Magnetic Field Measurements along Underground Route

Longitudinal magnetic field measurements were recorded along the project route between the Glenbrook Substation and the Norwalk Substation before and after construction. Appendix D presents the route and recorded magnetic field values along lane centerlines in the roadway for all portions of the route (1) between Glenbrook Substation and Brookside Drive at the I-95 Service Area; (2) between the intersection of Ledge Road and Noroton Avenue and the west side of the Metro-North/Amtrak Railroad; and (3) between the east side of the Metro-North/Amtrak Railroad and Norwalk Substation. These longitudinal measurements are representative of the magnetic fields measured over the duct bank, but in some locations the conditions dictated that readings be recorded parallel and adjacent to the duct bank. For instance, where the duct bank crosses curbs and lanes of U.S. Route 1, the measurement vehicle remained in the center of lanes to record magnetic fields safely in traffic.

The maximum, average, and median magnetic field levels encountered are listed in Table 1 below, and compared with pre-construction readings. The 5th and 95th percentile columns indicate the magnetic field values that were exceeded 95% and 5% of the time, respectively, along the project route.

Table 1 Summary of magnetic field levels (mG) measured along project route

	5th percentile	Median	Mean	95th percentile	maximum
Preconstruction, for 2004 filing	0.4	4.1	2.9	12.2	49.0
Preconstruction, April 2008	0.3	2.2	2.9	8.83	31.3
Post-construction, Dec. 2008	2.1	6.6	7.8	17.9	39.7

6.4 Substation Measurements

Electric and magnetic fields were measured outside the perimeter fences of the Glenbrook Substation and the Norwalk Substation once before and once after the 115-kV underground lines were energized. Appendix E depicts the path of perimeter measurements on aerial photographs. Note that measurements for the Glenbrook Substation do not include magnetic field readings along the western perimeter, since this fence line is not accessible to the public.

In the pre-construction measurements, the 115-kV underground lines were not in service but other lines connecting to the substations were in service. Energized lines not associated with the project contributed to the magnetic fields on the north side of the Glenbrook Substation, and on the north, east, and west sides of the Norwalk Substation. The elevated post-construction readings on the east side of the Norwalk Substation, for instance, are due in part to the Norwalk to Singer 345-kV lines, which were energized between the dates of the pre-construction and post-construction readings at the Norwalk Substation.

Electric-field measurements at the Norwalk Substation and Glenbrook Substation were recorded outside the substation perimeters in the vicinity of new cable risers and buswork. The locations of these measurements are depicted in the aerial photographs in Appendix E. Electric fields both perpendicular and parallel to the substation perimeter were recorded, noting distance from the fence-line reference point.

The results of substation measurements indicate what is commonly observed in EMF measurements along a substation perimeter, namely, that the highest magnetic field levels occur where transmission and distribution lines cross over or under the facility's fence line. Along the perimeter of the Norwalk Substation, for instance, the highest MF readings were recorded on the north and east sides of the substation, remote from the project-related 115-kV underground cables crossing on the western perimeter.

Where the bicycle path on the west side of the Norwalk Substation crosses over the underground lines, magnetic field readings along the path were approximately 20 mG higher than pre-energized readings. This region of higher fields extends for approximately 40 feet along the bicycle path. Where the sidewalk on the north side of the Glenbrook Substation crosses over the underground lines, magnetic field readings along the sidewalk were again approximately 20 mG above the pre-energized readings.

Electric-field readings along the bike path on the west side of the Norwalk Substation show that the installed cable risers and buswork did not appreciably alter the existing levels of electric fields on the path. Along the path closer to the new construction, electric fields continue to be highest beneath the overhead lines crossing over the substation perimeter.

7.0 Discussion

The primary purpose of this post-construction monitoring report is to confirm that the levels of fields associated with the operation of the new Glenbrook Cables transmission lines are consistent with expectations based upon the Application to the Council. Where the "as built" design is most similar to the conceptual design (e.g., at location D, Brookside Drive), the post-construction measurements are similar to those projected when adjusted for load level and burial depth. At other locations, the as-built duct spacing and the placement of the GCCs was adjusted by several inches, which resulted in magnetic field profiles different, and in some cases lower, than the prototypical conditions.

At locations with burial depths between 4 and 6 feet, the measured magnetic field levels exceed the modeled values. The magnetic field levels at one such measurement site (Location H, the Aesthestic Surgery Center) are depicted in Figure 5. The highest measured magnetic field at Location H was 17.7 mG. In the presence of extraneous sources such as overhead distribution lines at this location, this value is comparable to the 15.1 mG predicted in the Application at average load.[6] The shape of the measured profile, however, differs from both (1) the profile in the Application, and (2) the profile calculated for as-built burial depth, duct-spacing, and GCC location (see "calculated magnetic field" in Figure 5). This difference is most pronounced directly over the duct-bank centerline, but extends to distances of 25 feet or more from the underground cables. Some differences in shape can be explained by extraneous sources, which are noted in Figure 5, but the majority of the difference is likely due to imbalanced phase currents on one of the underground circuits.

The underground duct bank contains two circuits, designated 1522 and 1734. As noted above, calculations in this report assume balanced loading on the A, B, and C phases of each circuit. In the duct-bank cross-sections in Figure 5 and Appendix C, the 1522 circuit is depicted as the A1, B1, and C1 phases, and the 1734 circuit is depicted as the A2, B2, and C2 phases. Monitored loads recorded by CL&P and used in the calculated profiles are "circuit currents," expressed in units of amperes. Under balanced conditions, the currents on each phase of circuits 1522 and 1734, respectively, are identical to the corresponding circuit current. The recorded current does not reflect any imbalance that might exist in the loading on the phases.

On March 4, 2009, after the magnetic field measurements presented in Figure 5 and Appendix C were performed, CL&P recorded the degree of imbalance on the 1522 and 1734 circuits with detailed metering. The 1522 circuit showed typical balanced operation, with all phase currents

---

6 The average-load case used in the Application was 134 MVA, or 336 amps on each cable. At the time of the measurements depicted in Figure 5, the average monitored cable current was 313 amps. Correcting only for the monitored load, the magnetic-field value predicted in the Application is 14.1 mG over the duct-bank centerline.

within 1.2% of the mean phase current. Measured phase currents for the 1734 circuit, however, were within 8.4% of the mean phase current and were imbalanced. Since both the 1522 and 1734 circuits connect through disconnects and breakers to identical buses at both the Glenbrook Substation and the Norwalk Substation, the two circuits should have the comparable currents on each phase.

When the 8.4% imbalance measured on the 1734 circuit on March 4, 2009 is taken into account in modeling the magnetic field, the calculated profile in Figure 5 ("calculated magnetic field with imbalance") matches the measured profile more closely. In particular, the magnetic field levels above the duct-bank centerline match the observed shape, and calculated levels at 25 feet or more from the project route show the observed elevation. CL&P plans further measurements to determine the source of the imbalance on the 1734 circuit.

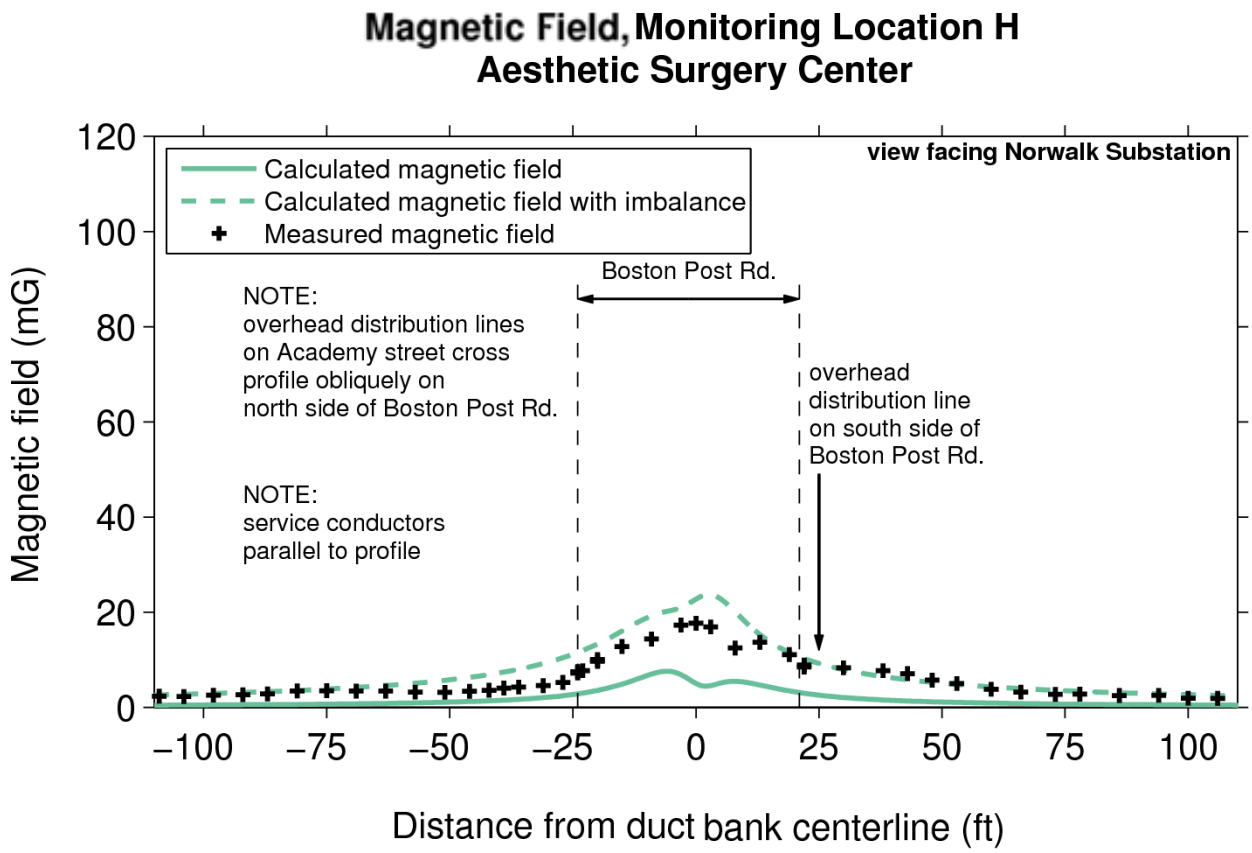

Figure 5. Comparison of measured magnetic fields (Location H, the Aesthetic Surgery Center in Darien) with calculated values assuming as-built burial depth, duct spacing, GCC location, and monitored loads. In the profile labeled "calculated magnetic field," balanced three-phase operation was assumed. In the profile labeled "calculated magnetic field with imbalance," phase currents on the 1734 circuit were modeled with the imbalance observed for this line on March 4, 2009.

Imbalance is the most likely explanation for the elevated magnetic field levels observed at two other monitoring locations (Location I, Haven Health Center, and Location P, Riverside Cemetery), where the highest measured magnetic field level approached 32 mG. With the exception of Location H, the Aesthestic Surgery Center, and Location I, Haven Health Center, the differences between the measured and calculated magnetic fields were minimal at distances of 25 feet.

Despite efforts to take measurements free from extraneous sources, this frequently was not possible because of numerous visible and invisible sources (e.g., currents on other buried utilities). Appendix C notes the location of identified sources near each measurement profile location. In some locations, distribution lines not associated with the project cross the measurement profile. For instance, at the Hamilton Avenue Condominiums (Location C), overhead distribution sources on the east side of Hamilton Avenue are discernable as a magnetic field peak offset from the duct-bank centerline. In other locations, distribution lines run parallel

to the measurement profile, e.g., at Norwalk Hospital (Location L) where distribution lines cross Van Buren Avenue. In such cases, the magnetic field across the profile is elevated uniformly across a section of the profile.

In some measurement locations, the duct bank bends or changes depth in a manner that was not considered in the conceptual design described in the 2004 Application. For instance, at Location A (Hamilton Ave./Glenbrook Bus Stop) the duct bank widens and dips to accommodate underground utilities, and bends to run under Hamilton Ave. The assumption of a uniform cross-section that is necessary to compare the magnetic field measured at this location with the calculated value in the 2004 Application could not be met. Because of the underground source at this location, which runs above the installed 115-kV lines, the fields at this monitoring site were higher than those calculated with a typical trench design.

8.0 Conclusion

Because of the underground construction of the Glenbrook Cables project, the ambient levels of electric fields along the project route are not affected by operation of the cables. In addition, ambient levels of electric fields encountered in publicly accessible areas in the vicinity of the Glenbrook Substation or the Norwalk Substation do not vary appreciably from pre-construction levels.

Taking into account the effects of extraneous magnetic field sources, the project-related magnetic fields above uniform duct-bank sections are typically less than 20 mG under measured conditions. The measured magnetic field profiles in Appendix C agree with the pre-construction assessment, which predicted a centerline magnetic-field value of 15.1 mG based upon nominal load, duct spacing, and burial depth. As noted above, the actual loads recorded during the post-construction measurement period were within ±35% of the 134 MVA (average-load) case assumed for the assessment made in the Application.

At two monitoring locations (Location I, Haven Health Center, and Location P, Riverside Cemetery) the highest measured magnetic field level approached 32 mG, a value that could not be attributed solely to sources external to the Glenbrook Cables project. Unbalanced operation of one of the underground circuits was observed on March 4, 2009, and is likely responsible for the observed elevation of the measured profiles at these locations. With the exception of two monitoring location (Location H, the Aesthestic Surgery Center, and Location I, Haven Health Center), measured magnetic fields differed from the Application prediction minimally at distances of 25 feet. The project effect on ambient 60-Hz magnetic field levels at a distance of more than 70 feet from the duct-bank centerline is less than 1 mG under average-load conditions, a value within the range of typical background values in homes and workplaces. This correspondence with predictions was observed despite the likelihood of imbalance in one of the underground circuits.

Above splice vaults, measured magnetic fields were higher than were measured above duct-bank sections, as would be expected from the greater separation of phase conductors. The elevated magnetic fields above splice vaults are also comparable in magnitude and extent to the

elevated fields encountered along the project route from extraneous sources (see, for instance, the transmission-line source depicted in the longitudinal measurements in Appendix D).

In the roadways along the project route, the average (mean) magnetic field levels are elevated to approximately 8 mG under the measurement conditions, higher than the 2 mG mean levels measured before construction. Even in isolated regions, however, measurements along the project route do not show an increase in maximum magnetic field (see Table 1). These data indicate that extraneous sources such as transmission lines and distribution lines, where they approach the underground 115-kV lines, are the strongest magnetic field sources in roadways.

Appendix A

Council-Approved EMF Monitoring Plan

Appendix B

Map and Post-Construction Aerial Photographs of Monitoring Locations

Appendix C

Calculated and Measured Magnetic Fields at the Monitoring Locations

Measurement Site:	**Hamilton Ave./Glenbrook Bus Stop**
Identifier:	A
Sheet Reference:	01230-10001 PG 002
Segment:	1
Lat/Long meas. start:	41.06377N 73.52047W
Lat/Long meas. end:	41.06348N 73.52037W
Measurement Time:	12:30 PM February 11, 2009
Monitored Current:	430 A Circuit 1522 (at Norwalk substation)
	395 A Circuit 1734 (at Norwalk substation)
Burial depth:	9 ft 6 inches
Duct bank section:	B1 (see sheet 01230-46001 PG 001)
Notes:	overhead distribution circuits on north side of Hamilton Ave.

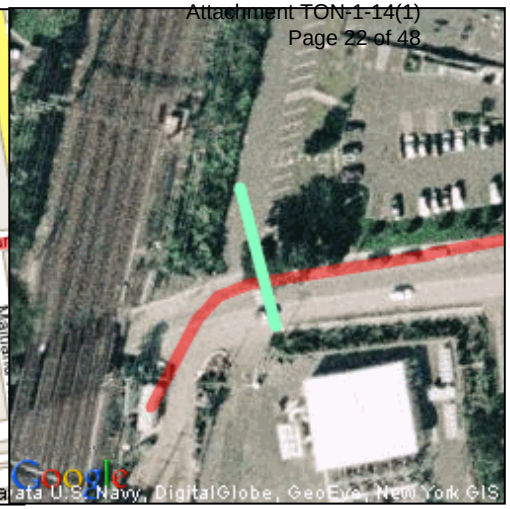

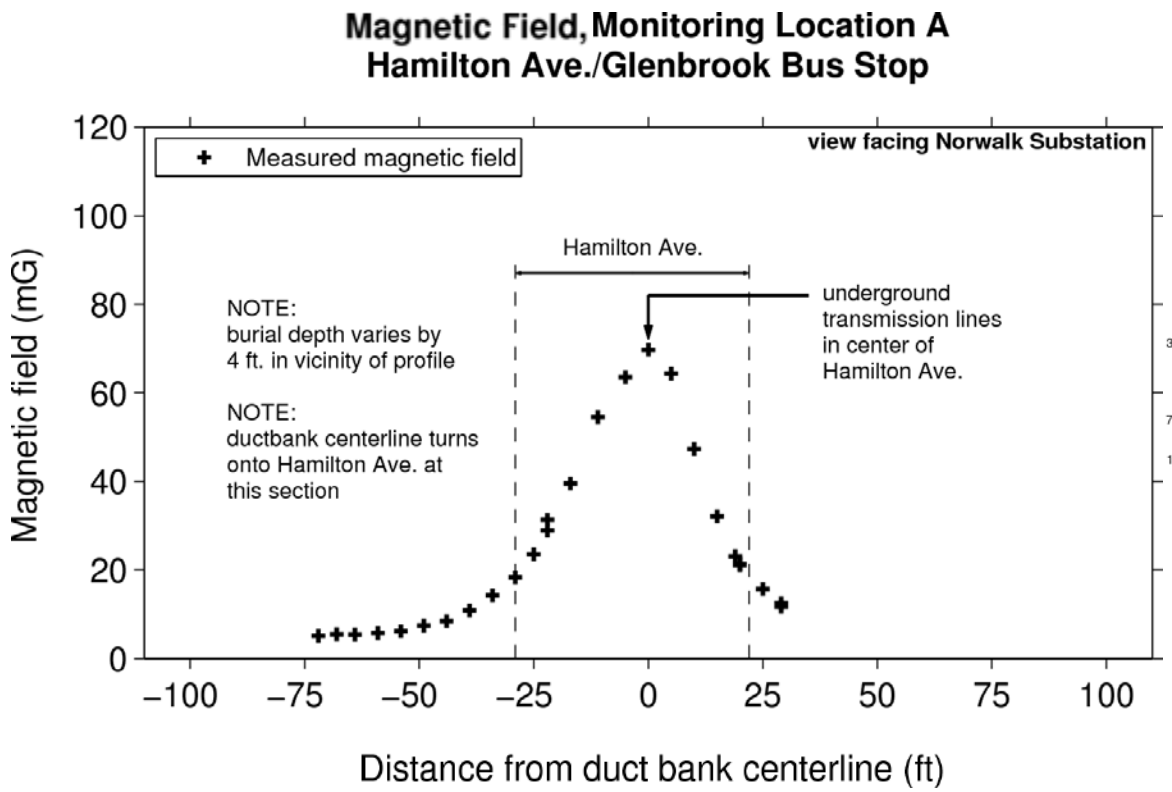

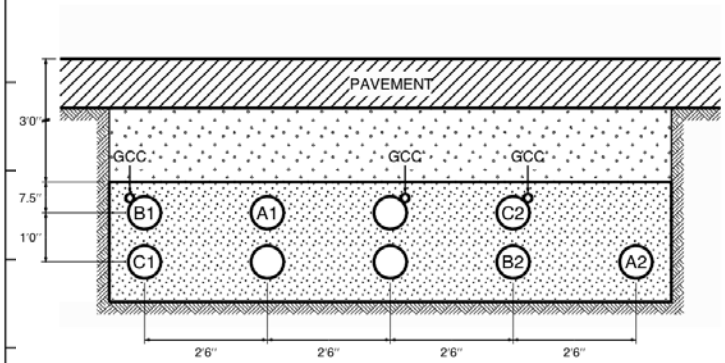

Measurement Site:	**Titan Tots**
Address:	126 Hamilton Avenue, Stamford
Identifier:	B
Sheet Reference:	01230-10001 PG 003
Segment:	1
Lat/Long meas. start:	41.06390N 73.51857W
Lat/Long meas. end:	41.06358N 73.51855W
Measurement Time:	12:15 PM February 11, 2009
Monitored Current:	431 A Circuit 1522 (at Norwalk substation)
	394 A Circuit 1734 (at Norwalk substation)
Burial depth:	6 feet (varies)
Duct bank section:	none (Splice vaults 4001, 5001, 6201)
Notes:	overhead distribution circuits on north side of Hamilton Ave.

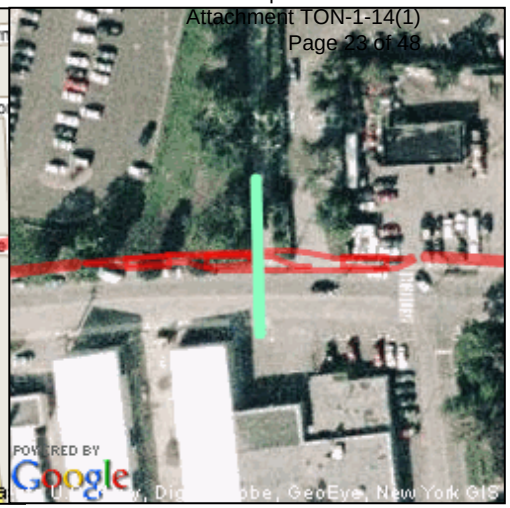

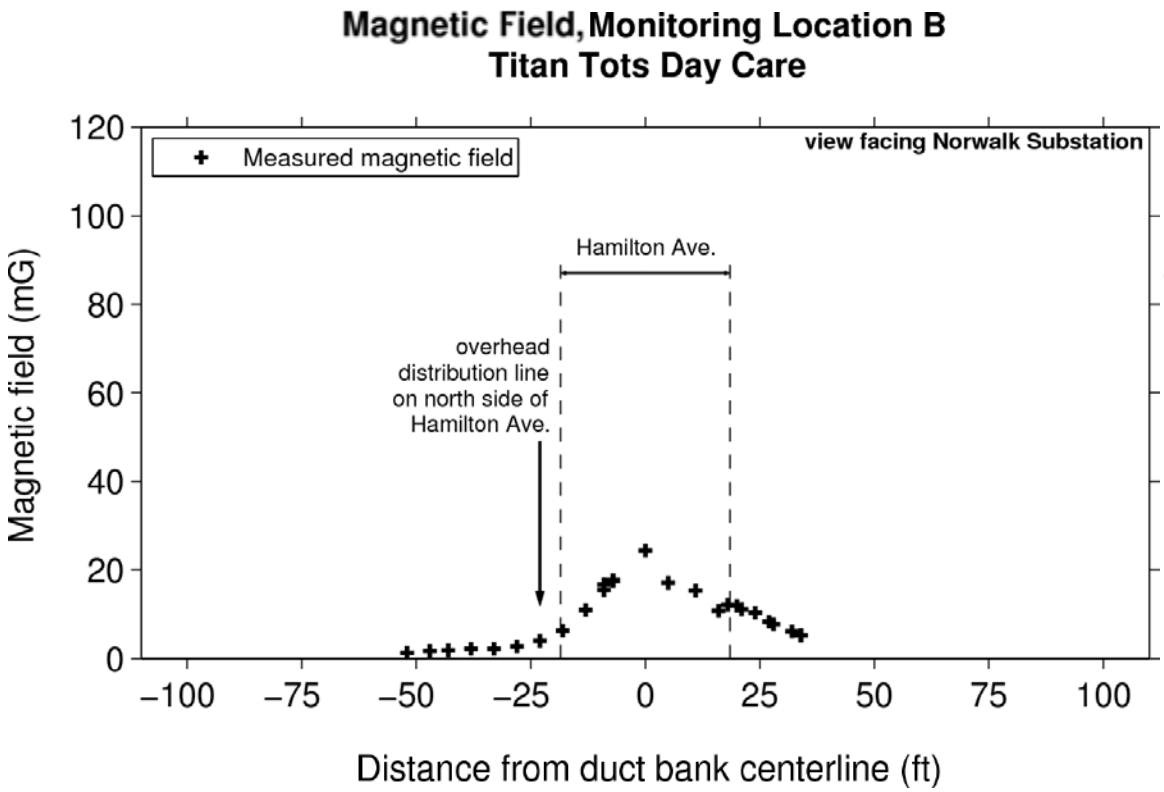

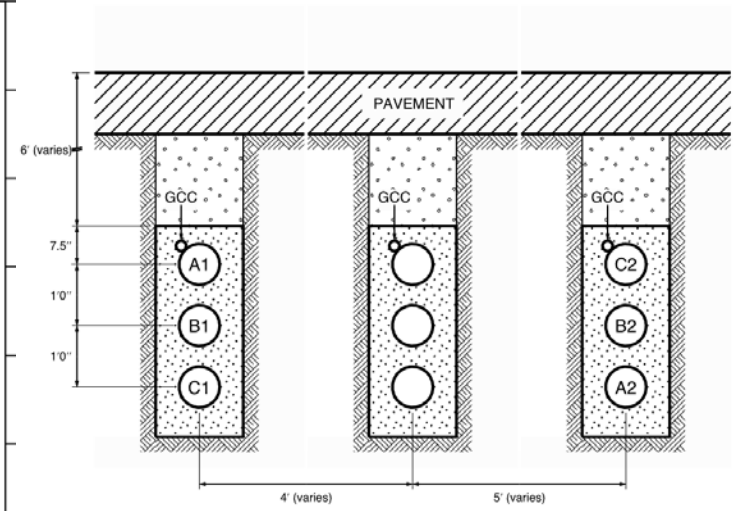

Measurement Site:	**Hamilton Ave. Condominiums**
Identifier:	C
Sheet Reference:	01230-10001 PG 005
Segment:	1
Lat/Long meas. start:	41.06313N 73.51147W
Lat/Long meas. end:	41.06322N 73.51102W
Measurement Time:	12:05 PM February 11, 2009
Monitored Current:	442A Circuit 1522 (at Norwalk substation)
	407 A Circuit 1734 (at Norwalk substation)
Burial depth:	10 ft
Duct bank section:	B2 (see sheet 01230-46001 PG 001C)
Notes:	overhead distribution circuits on east side of Hamilton Ave., and crossing Hamilton Ave.

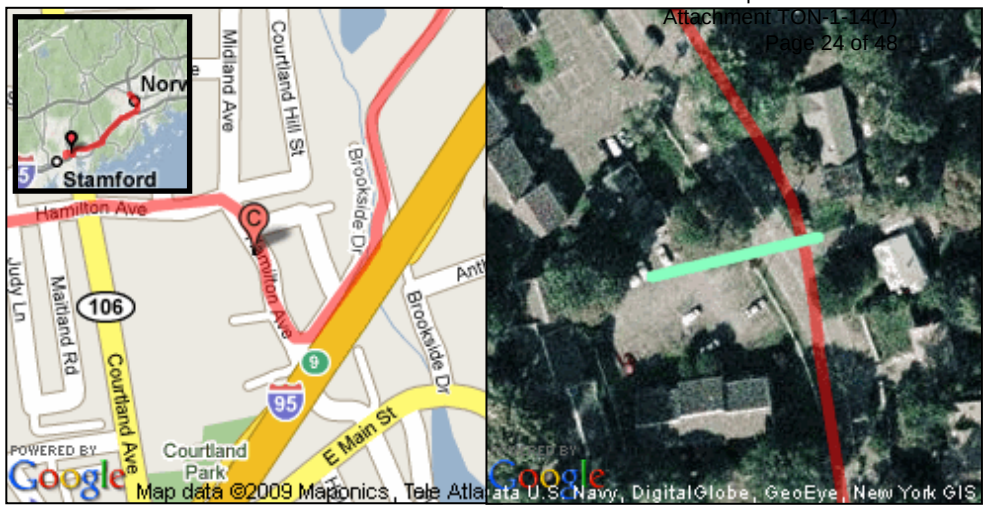

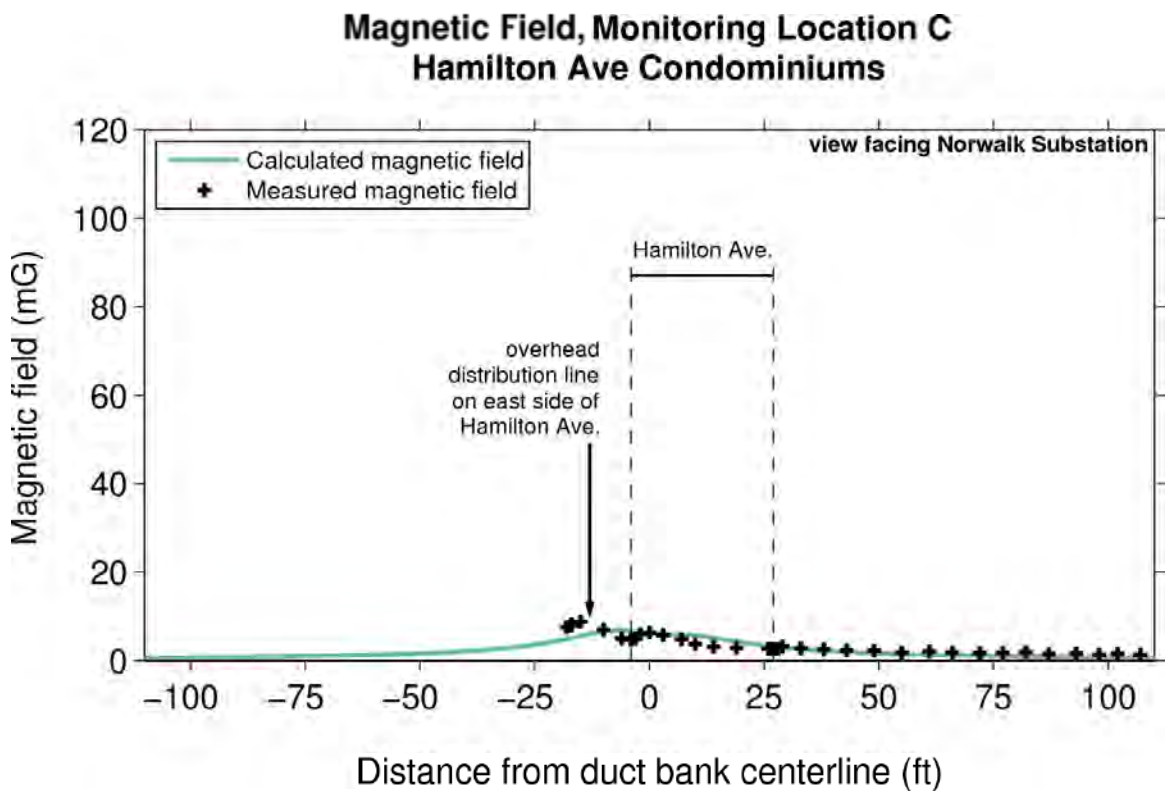

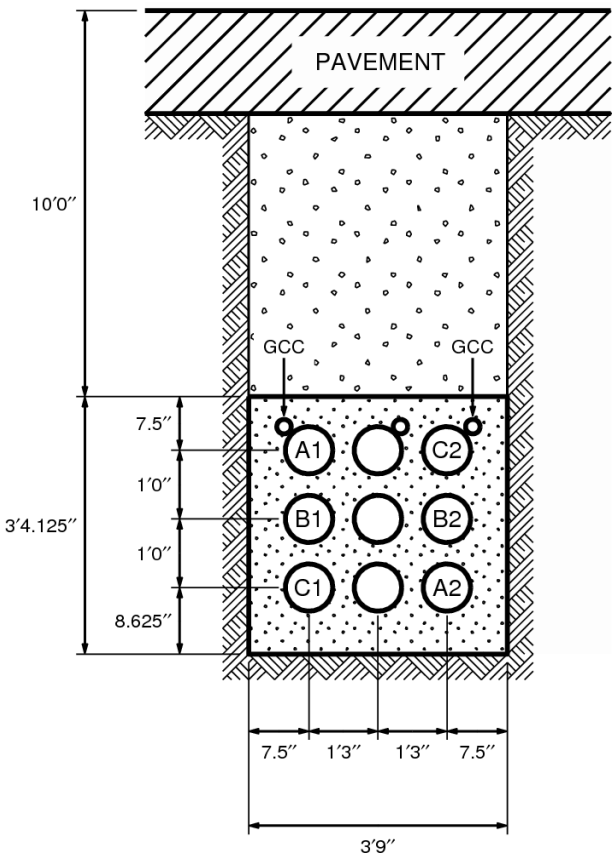

Measurement Site:	**Brookside Drive**
Address:	57 Brookside Dr., Darien
Identifier:	D
Sheet Reference:	01230-10001 PG 008
Segment:	1
Lat/Long meas. start:	41.06477N 73.50877W
Lat/Long meas. end:	41.06483N 73.50830W
Measurement Time:	12:50 PM December 10, 2009
Monitored Current:	346 A Circuit 1522 (at Norwalk substation)
	318 A Circuit 1734 (at Norwalk substation)
Burial depth:	7 ft 6 inches
Duct bank section:	L1 (see sheet 01230-46001 PG 001)
Notes:	overhead distribution circuits on west side of Brookside Drive

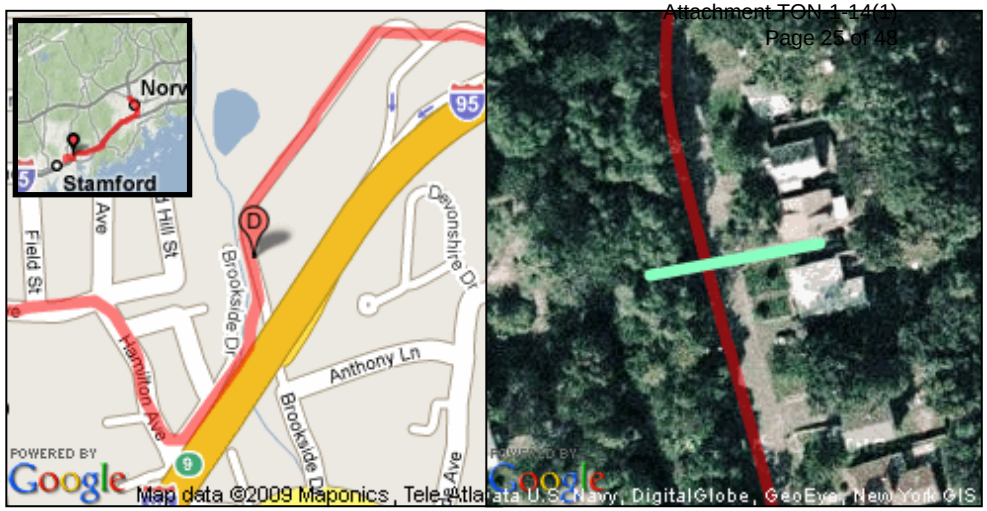

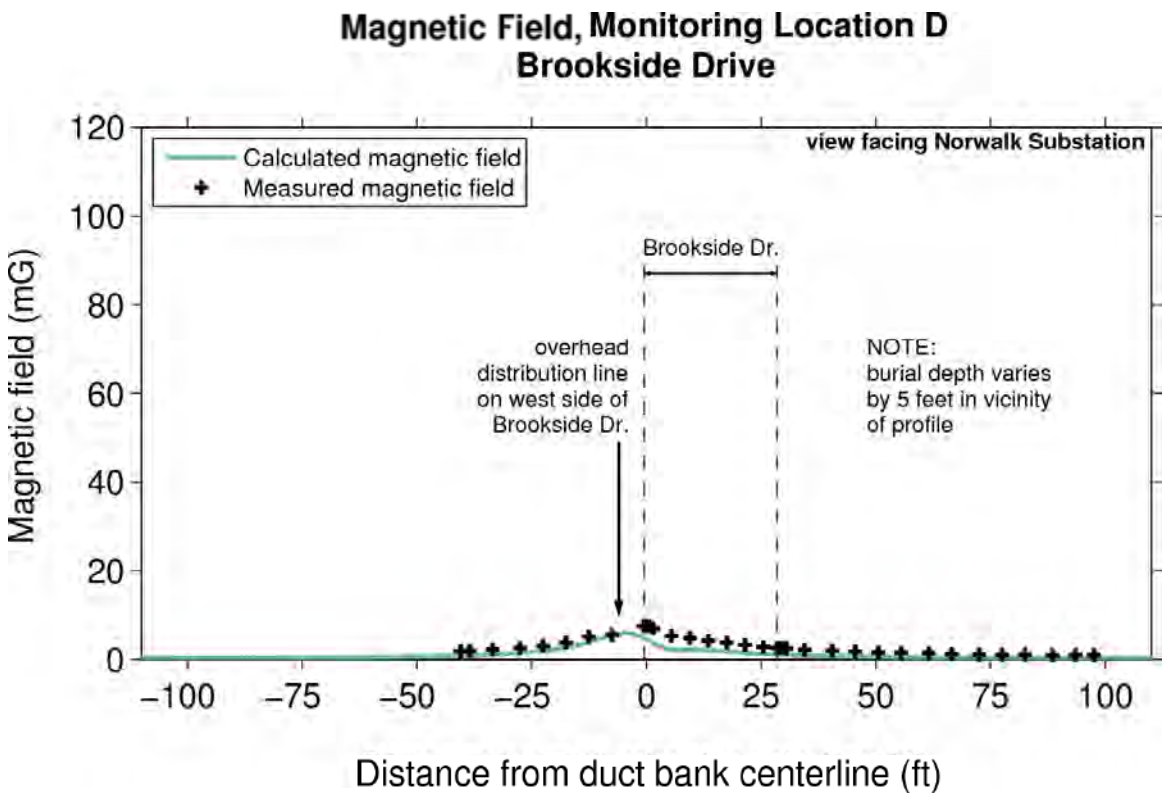

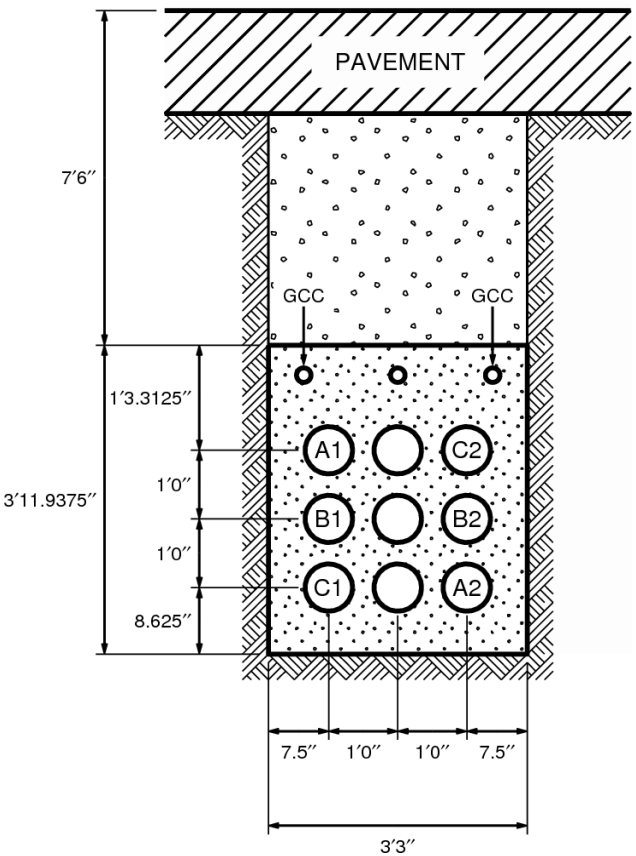

Measurement Site:	**Stony Brook Court**
Address:	50 Ledge Rd., Darien
Identifier:	E
Sheet Reference:	01230-10001 PG 018
Segment:	1
Lat/Long meas. start:	41.07150N 73.48378W
Lat/Long meas. end:	41.07190N 73.48387W
Measurement Time:	12:27 PM December 10, 2009
Monitored Current:	320 A Circuit 1522 (at Norwalk substation)
	294 A Circuit 1734 (at Norwalk substation)
Burial depth:	9 ft
Duct bank section:	B2 (see sheet 01230-46001 PG 001)
Notes:	overhead distribution circuits on north side of Ledge Rd.

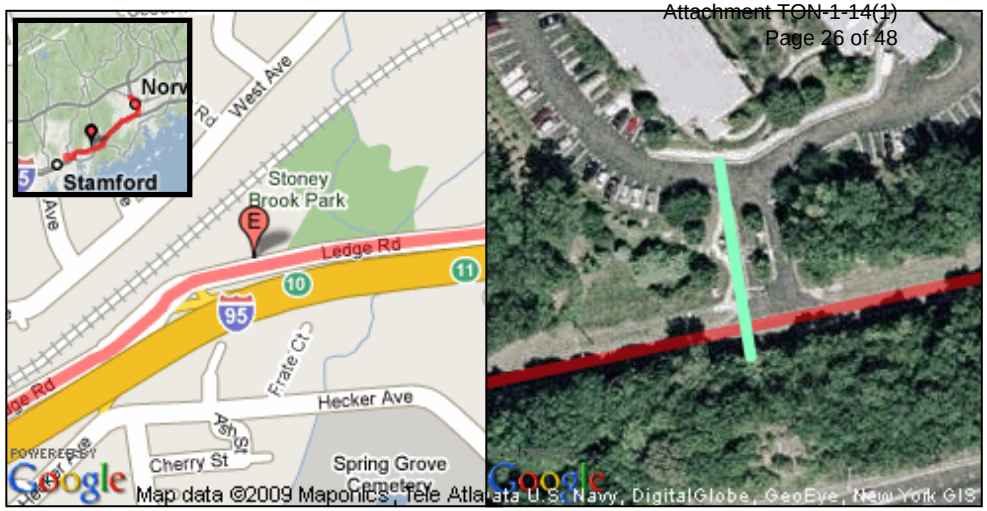

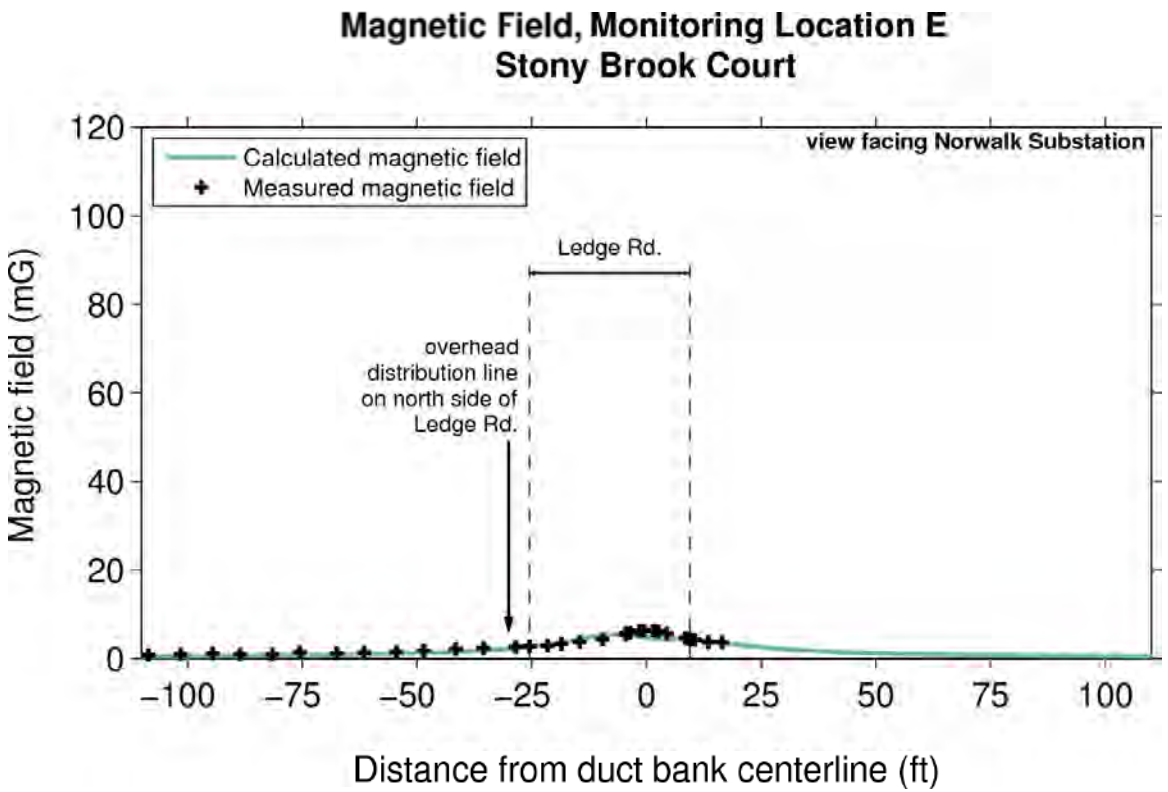

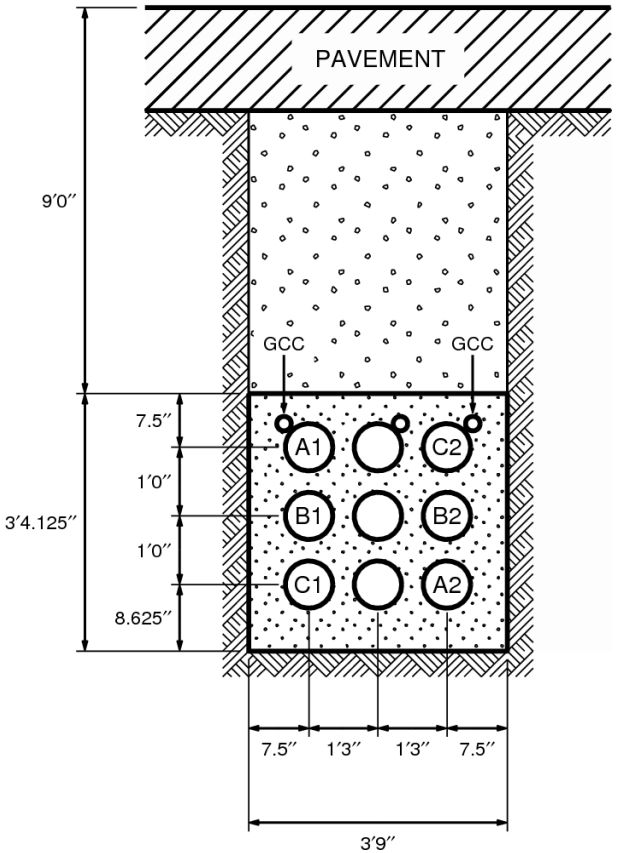

Measurement Site:	**Kings Highway Tennis Club**
Address:	8 Old Kings Highway North, Darien
Identifier:	F
Sheet Reference:	01230-10001 PG 027
Segment:	2
Lat/Long of reading:	41.07813N 73.46703W
Measurement Time:	10:45 AM December 10, 2009
Monitored Current:	366 A Circuit 1522 (at Norwalk substation)
	336 A Circuit 1734 (at Norwalk substation)
Burial depth:	varies, 4'6" – 10'
Duct bank section:	varies, B1 (see sheet 01230-46001 PG 001)
Notes:	this measurement location is more than 100 ft from the duct-bank route

Spot measurement

2.3 mG

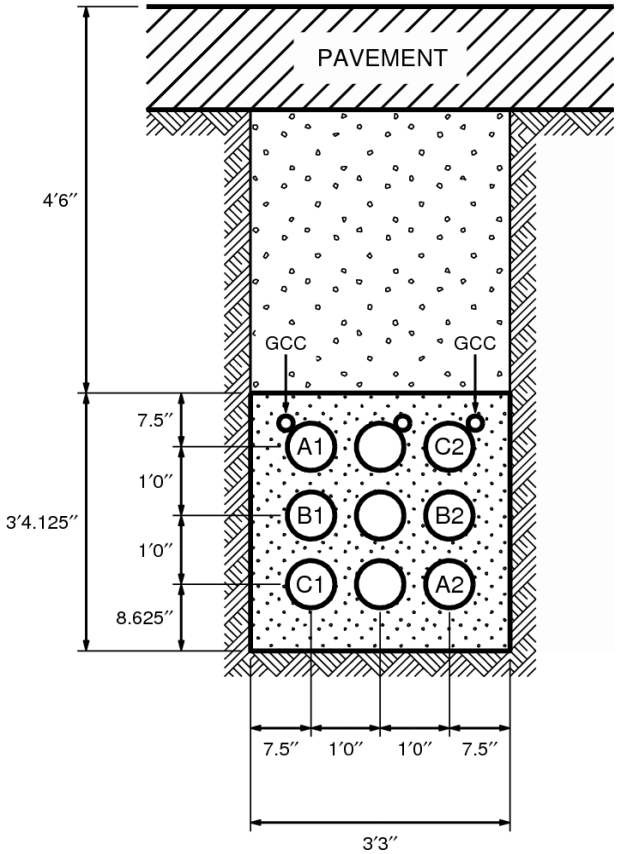

Measurement Site:	**Parking Lot near Mechanic St.**
Identifier:	G
Sheet Reference:	01230-10001 PG 027
Segment:	2
Lat/Long meas. start:	41.07840N 73.46825W
Lat/Long meas. end:	41.07835N 73.46713W
Measurement Time:	10:37 AM December 10, 2008
Monitored Current:	366 A Circuit 1522 (at Norwalk substation)
	336 A Circuit 1734 (at Norwalk substation)
Burial depth:	4 ft 6 inches
Duct bank section:	B1 (see sheet 01230-46001 PG 001)
Notes:	

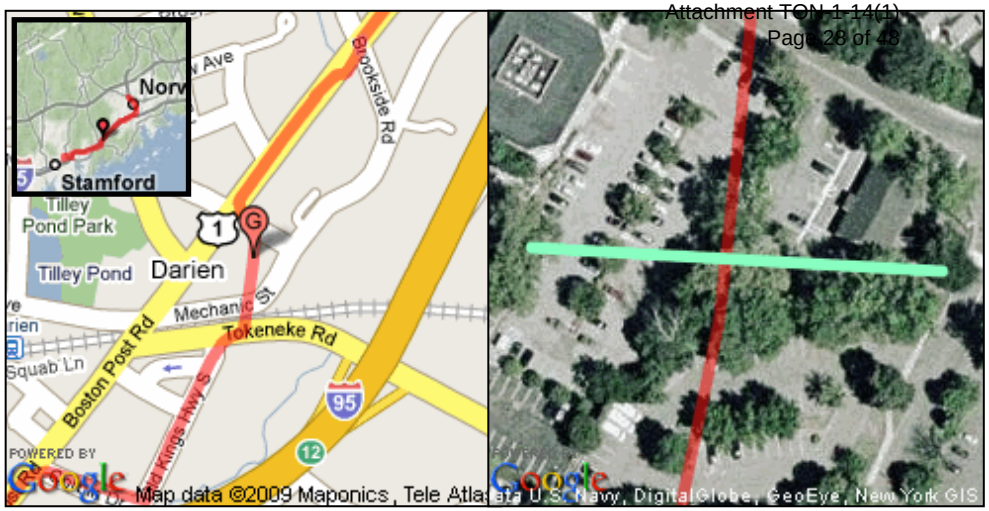

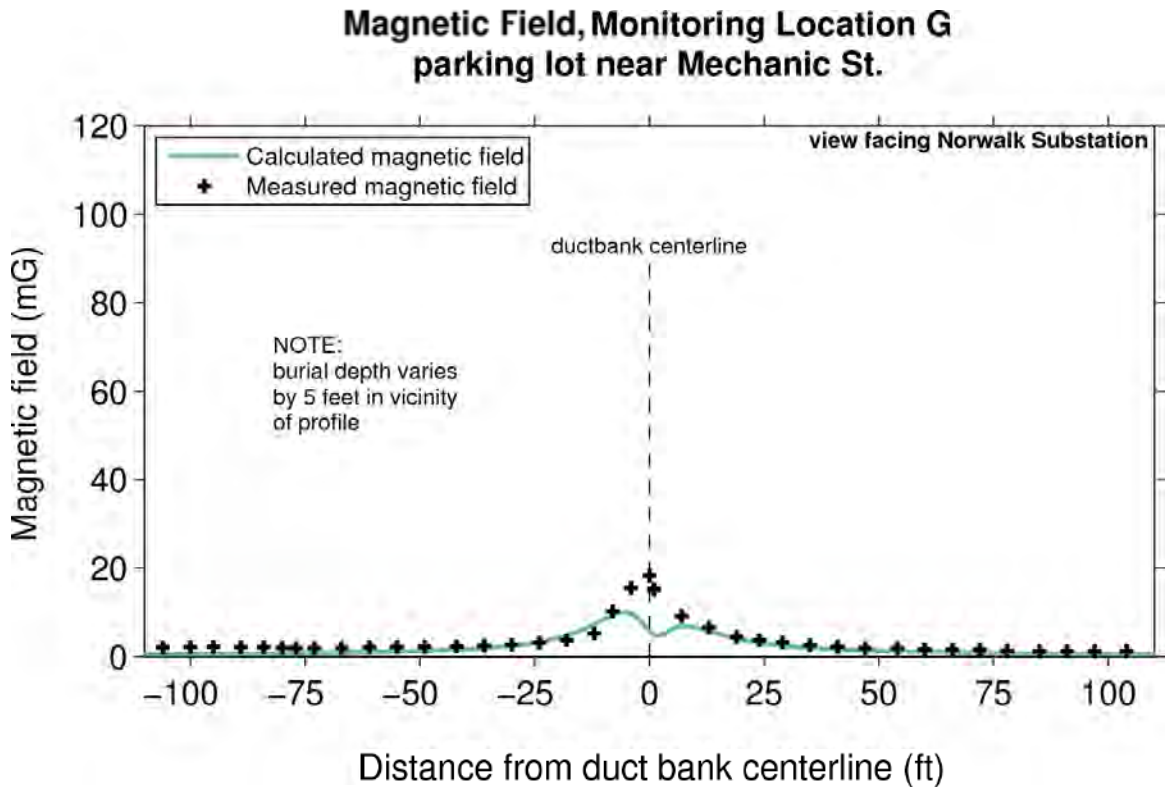

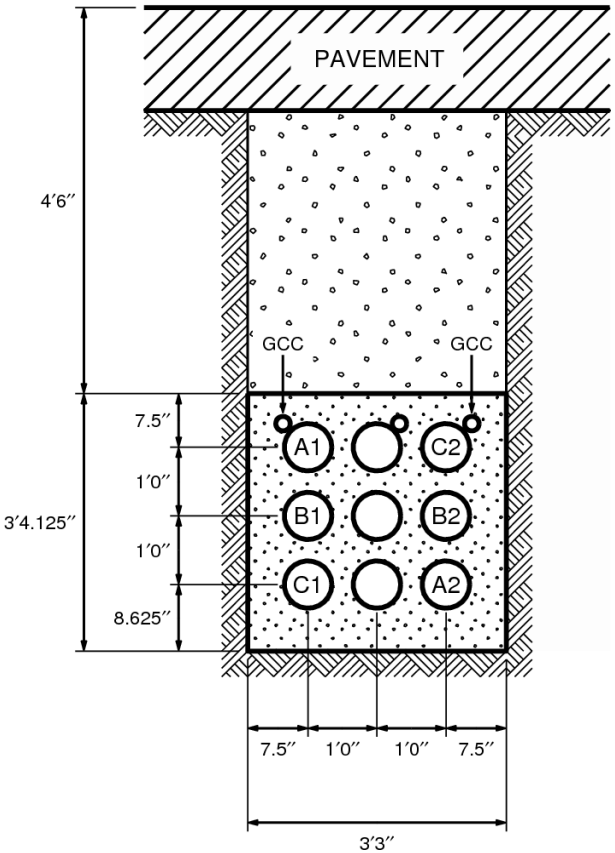

Measurement Site:	**Aesthetic Surgery Center**
Address:	722 Boston Post Road, Darien
Identifier:	H
Sheet Reference:	01230-10001 PG 028
Segment:	2
Lat/Long meas. start:	41.08017N 73.46763W
Lat/Long meas. end:	41.07977N 73.46688W
Measurement Time:	12:12 PM December 10, 2008
Monitored Current:	326 A Circuit 1522 (at Norwalk substation)
	300 A Circuit 1734 (at Norwalk substation)
Burial depth:	5 ft 6 inches
Duct bank section:	B1 (see sheet 01230-46001 PG 001)
Notes:	overhead distribution circuits on north side of Boston Post Rd., and crossing Boston Post Rd.

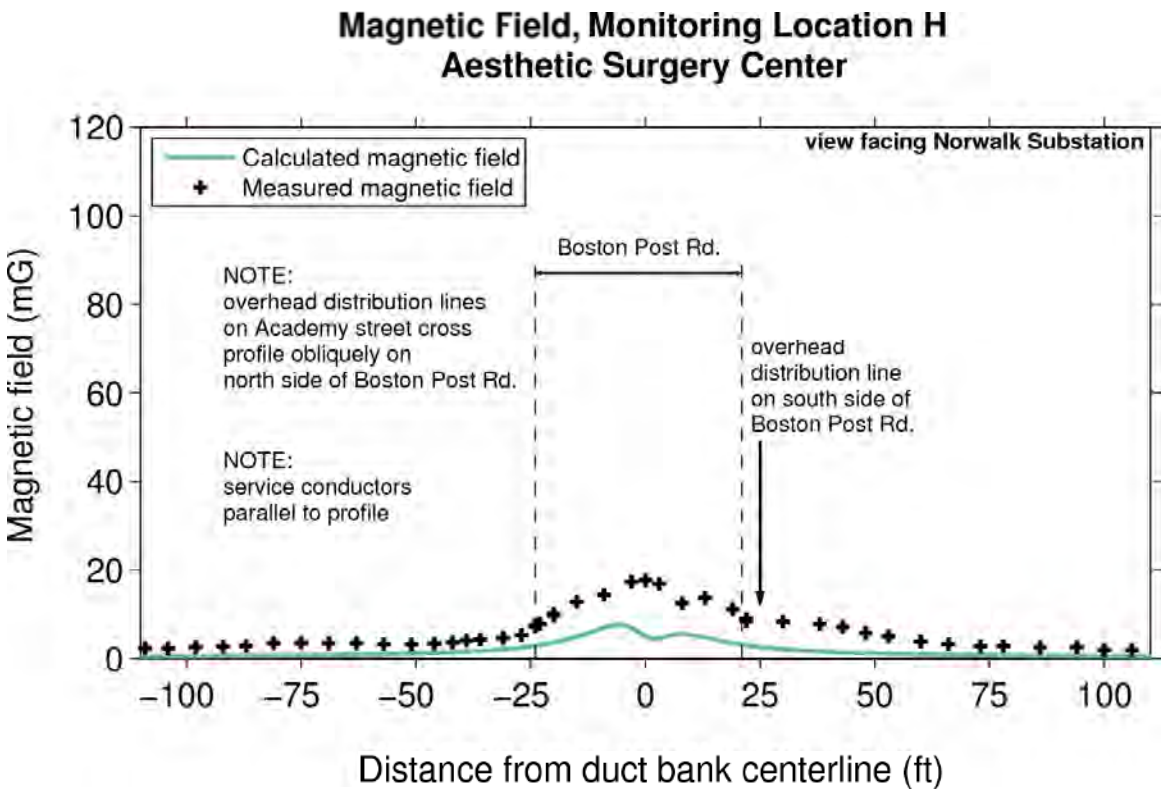

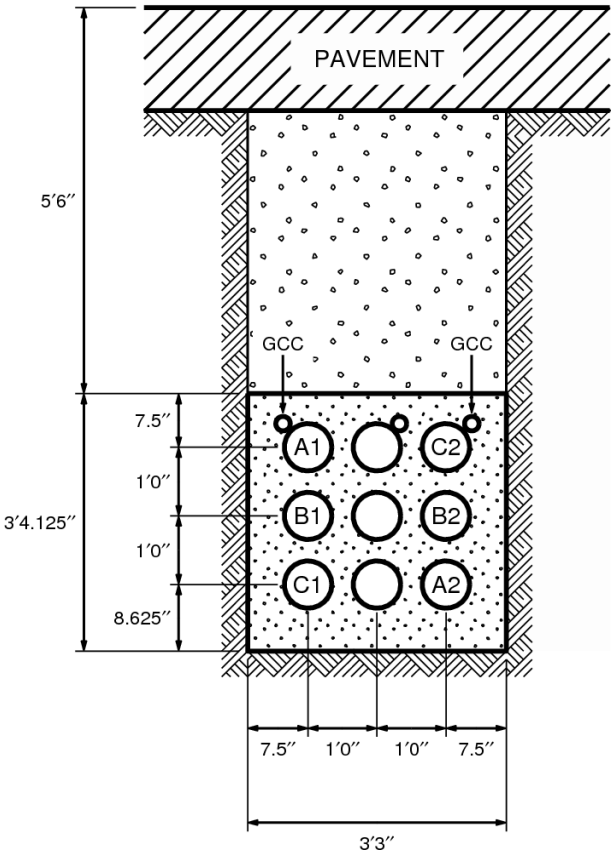

Measurement Site:	**Haven Health Center**
Address:	599 Boston Post Road, Darien
Identifier:	I
Sheet Reference:	01230-10001 PG 029
Segment:	2
Lat/Long meas. start:	41.08233N 73.46518W
Lat/Long meas. end:	41.08203N 73.46463W
Measurement Time:	12:00 PM December 10, 2008
Monitored Current:	326 A Circuit 1522 (at Norwalk substation)
	300 A Circuit 1734 (at Norwalk substation)
Burial depth:	4 ft 6 inches
Duct bank section:	B1 (see sheet 01230-46001 PG 001)
Notes:	overhead distribution circuits on north side of Boston Post Rd., and crossing Boston Post Rd.

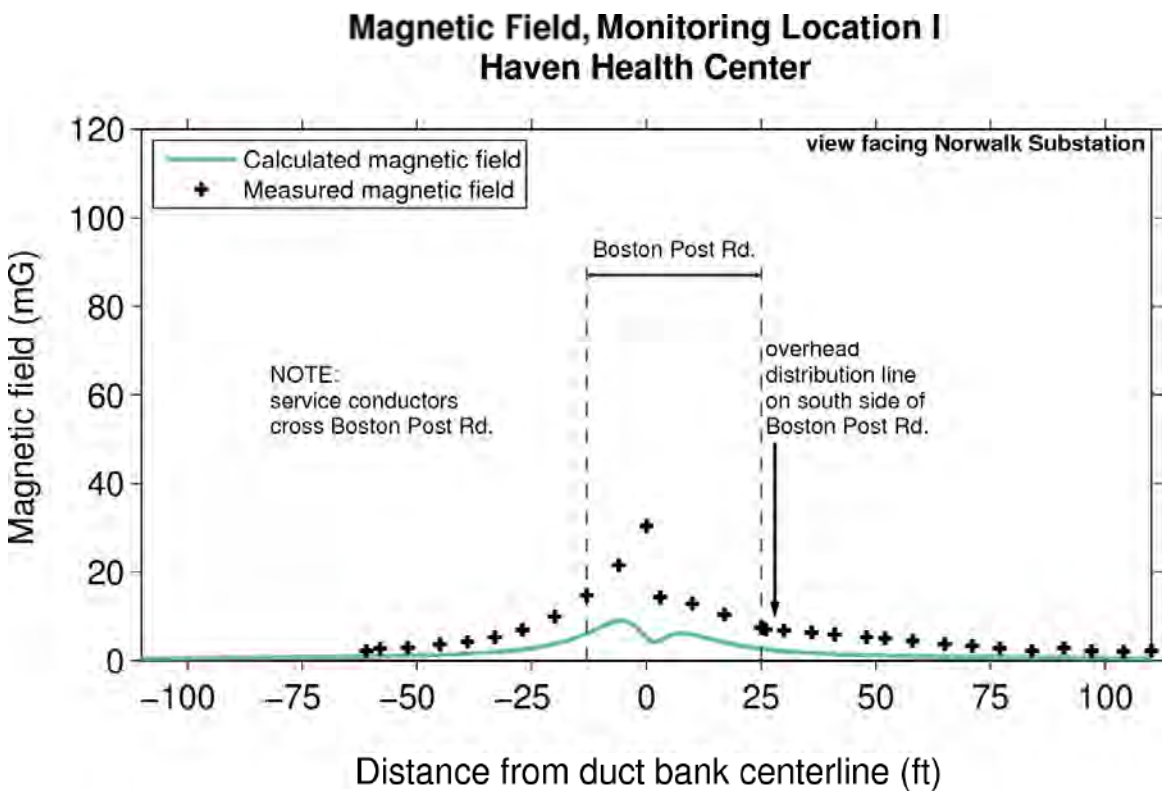

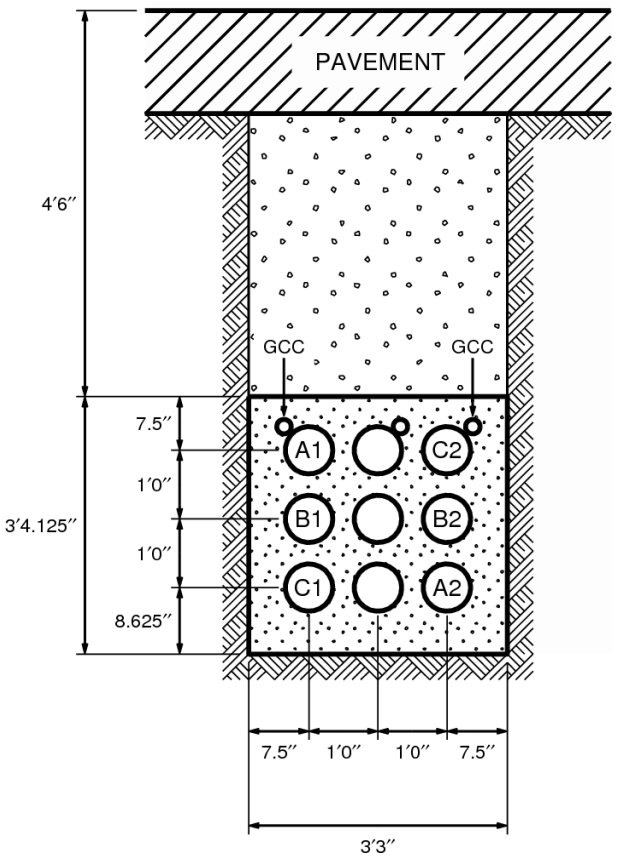

Measurement Site:	**Wal-Mart Parking Lot**
Address:	680 Connecticut Avenue, Norwalk
Identifier:	J
Sheet Reference:	01230-10001 PG 038
Segment:	2
Lat/Long meas. start:	41.09603N 73.44858W
Lat/Long meas. end:	41.09567N 73.44820W
Measurement Time:	8:33 AM December 10, 2008
Monitored Current:	406 A Circuit 1522 (at Norwalk substation)
	372 A Circuit 1734 (at Norwalk substation)
Burial depth:	varies 7.5 - 10 feet
Duct bank section:	none (Splice vaults 4019, 5010, 6219)
Notes:	overhead distribution circuits on north side of Connecticut Ave.

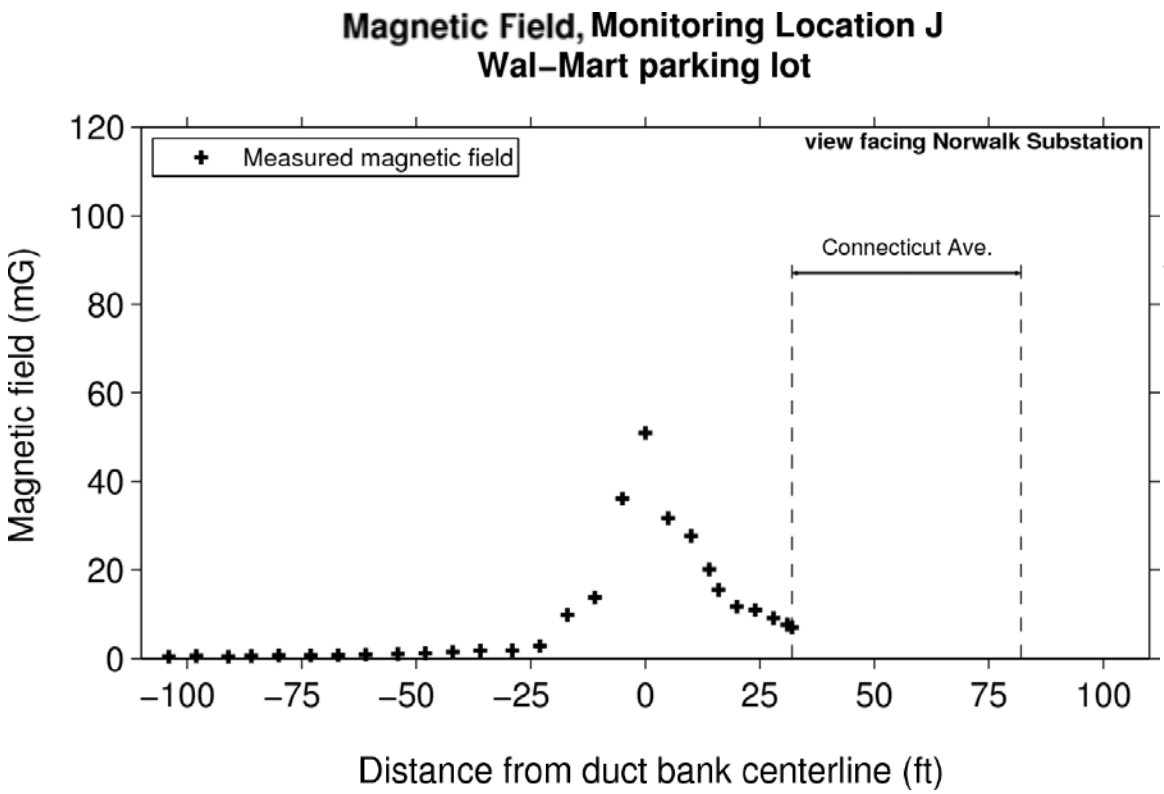

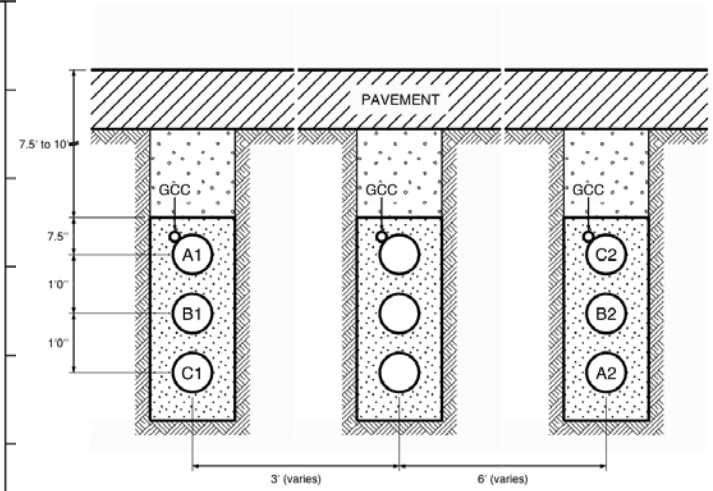

Measurement Site:	**Parking Lot near Jerry's Upholstery, Inc.**
Address:	67 Connecticut Avenue, Norwalk
Identifier:	K
Sheet Reference:	01230-10001 PG 049
Segment:	2
Lat/Long meas. start:	41.10693N 73.42238W
Lat/Long meas. end:	41.10747N 73.42265W
Measurement Time:	9:01 AM December 10, 2008
Monitored Current:	401 A Circuit 1522 (at Norwalk substation)
	367 A Circuit 1734 (at Norwalk substation)
Burial depth:	6 feet (varies)
Duct bank section:	none (Splice vaults 4025, 5025, 6225)
Notes:	overhead distribution circuits on south side of Connecticut Ave.

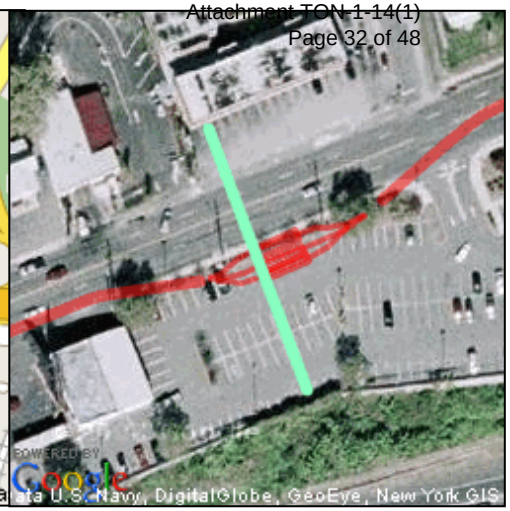

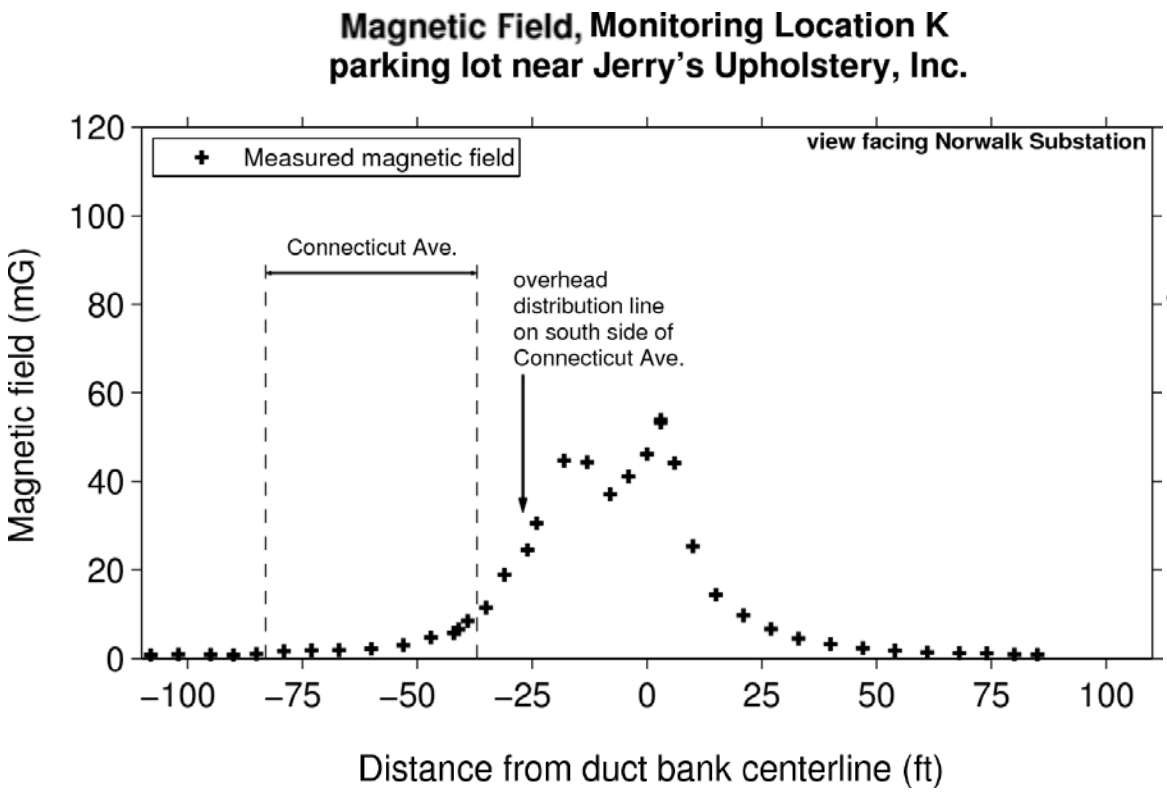

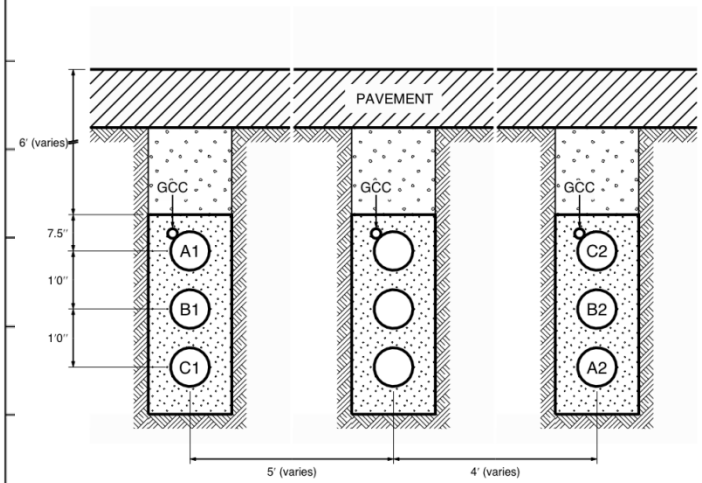

Measurement Site:	**Norwalk Hospital**
Address:	17 Maple Street, Norwalk
Identifier:	L
Sheet Reference:	01230-10001 PG 051
Segment:	2
Lat/Long meas. start:	41.11167N 73.41923W
Lat/Long meas. end:	41.11168N 73.42032W
Measurement Time:	9:34 AM December 10, 2008
Monitored Current:	403 A Circuit 1522 (at Norwalk substation)
	371 A Circuit 1734 (at Norwalk substation)
Burial depth:	12 ft 6 inches
Duct bank section:	B3 (see sheet 01230-46001 PG 001)
Notes:	overhead distribution circuits on east side of Van Buren Ave., and crossing Van Buren Ave.

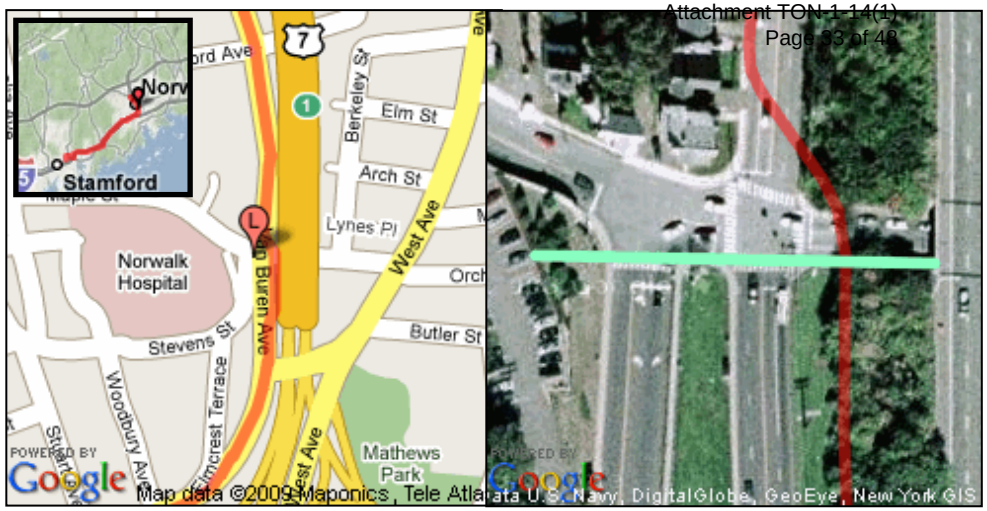

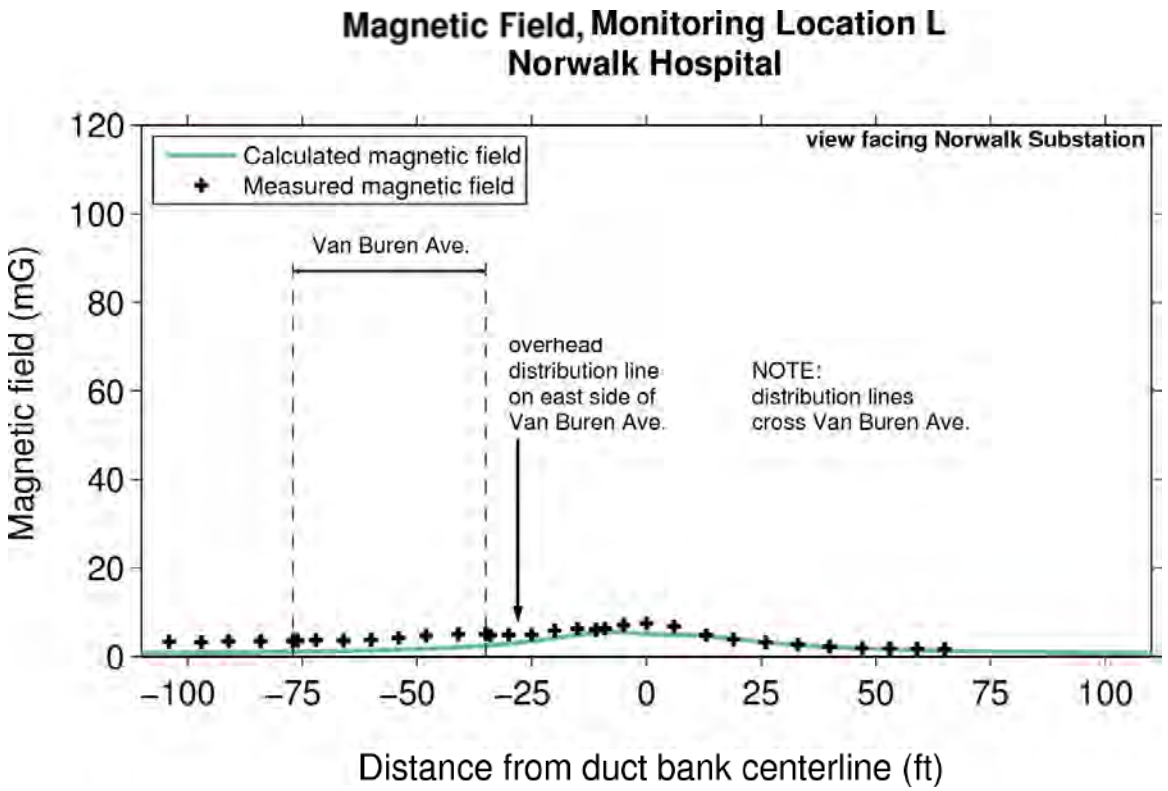

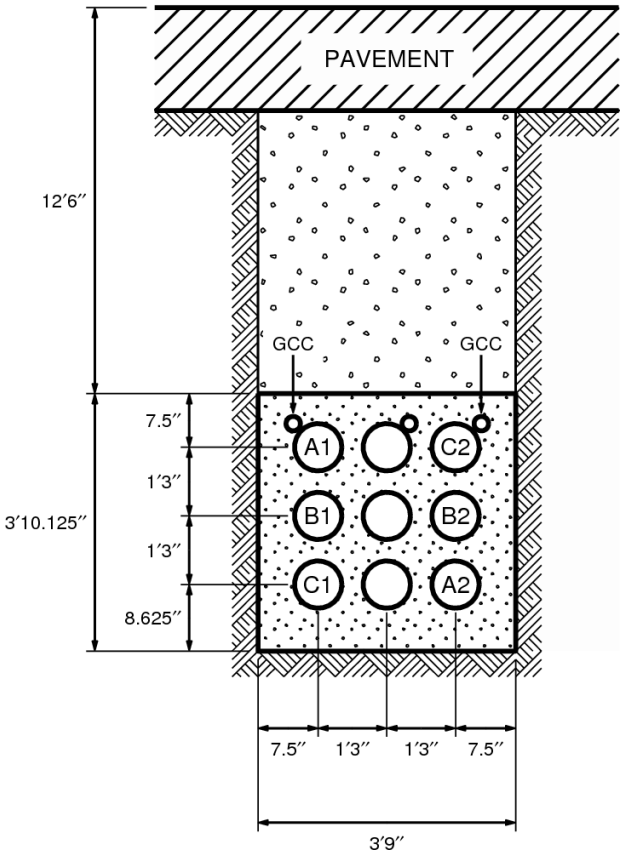

Measurement Site:	**Jefferson Elementary School**
Address:	75 Van Buren Avenue, Norwalk
Identifier:	M
Sheet Reference:	01230-10001 PG 054
Segment:	2
Lat/Long meas. start:	41.11637N 73.42030W
Lat/Long meas. end:	41.11627N 73.42075W
Measurement Time:	9:23 AM December 10, 2008
Monitored Current:	403 A Circuit 1522 (at Norwalk substation)
	371 A Circuit 1734 (at Norwalk substation)
Burial depth:	9 ft
Duct bank section:	B2 (see sheet 01230-46001 PG 001)
Notes:	overhead distribution circuits on west side of Van Buren Ave.

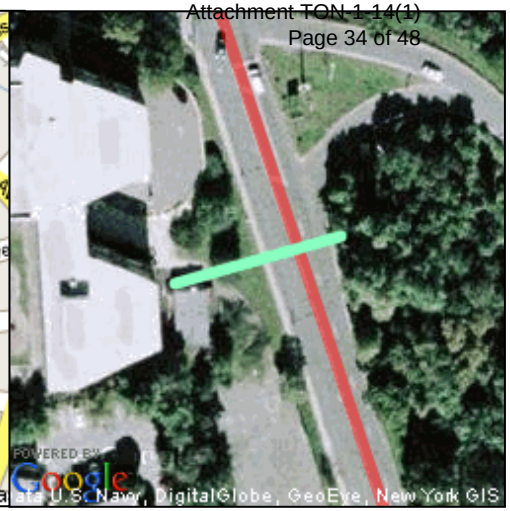

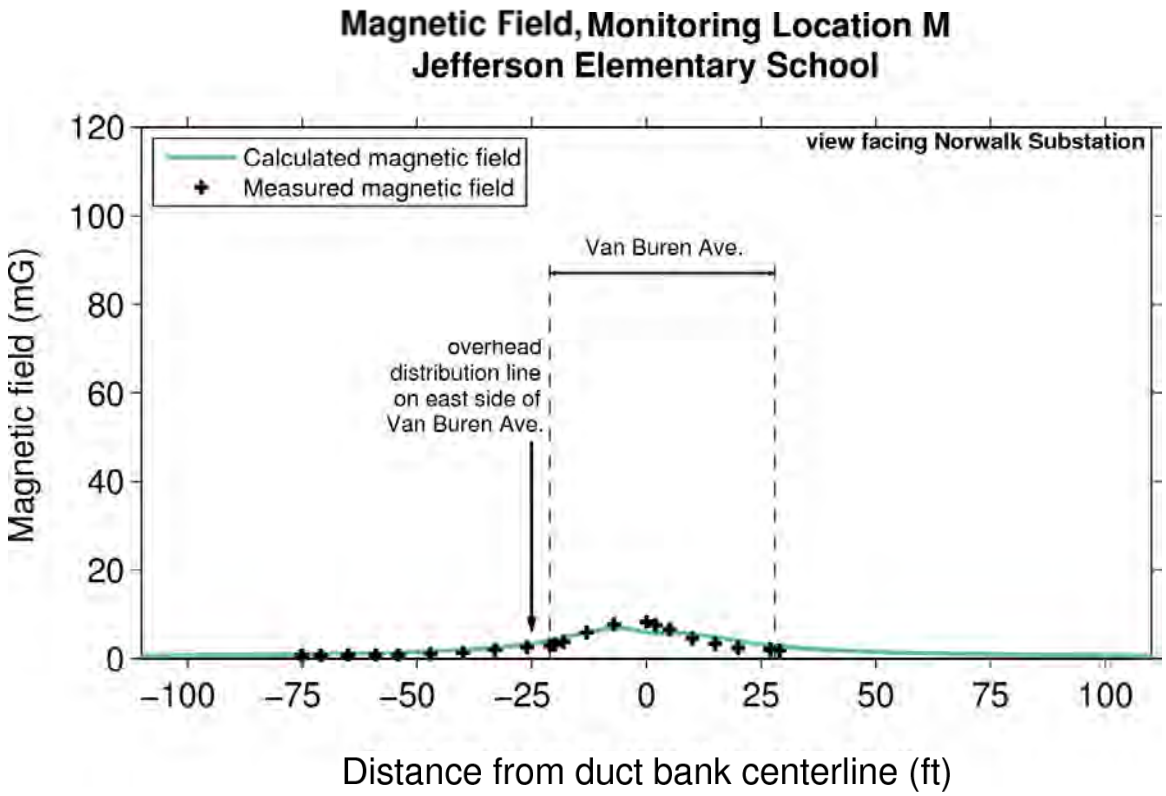

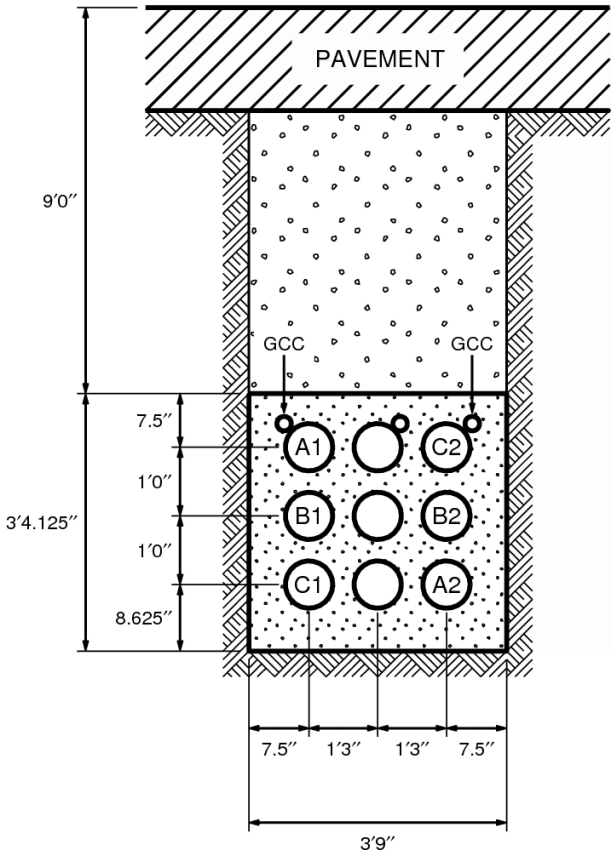

Measurement Site:	**Church of Jesus Christ of LDS**
Address:	11 Spring Hill Ave., Norwalk
Identifier:	N
Sheet Reference:	01230-10001 PG 055
Segment:	2
Lati/long of reading	41.11855N 73.42293W
Measurement Time:	1:36 PM December 10, 2008
Monitored Current:	345 A Circuit 1522 (at Norwalk substation)
	317 A Circuit 1734 (at Norwalk substation)
Burial depth:	varies, 6' – 10'
Duct bank section:	varies, B2 (see sheet 01230-46001 PG 001)
Notes:	site is located >200 feet from Project route

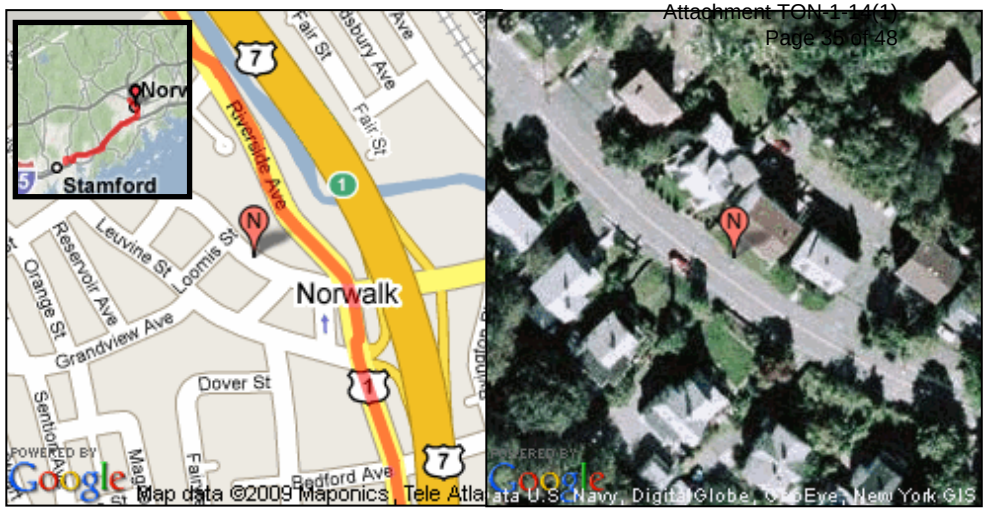

Spot measurement

3.2 mG

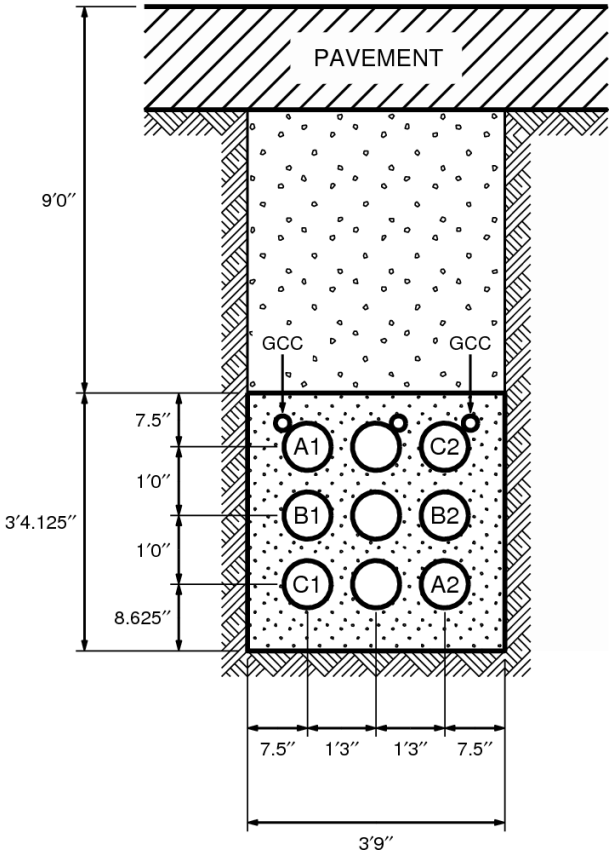

Measurement Site:	**Riverside Cemetery**
Identifier:	P
Sheet Reference:	01230-10001 PG 058
Segment:	2
Lat/Long meas. start:	41.12377N 73.42787W
Lat/Long meas. end:	41.12440N 73.42683W
Measurement Time:	9:55 AM December 10, 2008
Monitored Current:	394 A Circuit 1522 (at Norwalk substation)
	361 A Circuit 1734 (at Norwalk substation)
Burial depth:	4 ft 6 inches
Duct bank section:	B1 (see sheet 01230-46001 PG 001)
Notes:	overhead distribution circuits on east side of Van Buren Ave., and crossing Van Buren Ave.

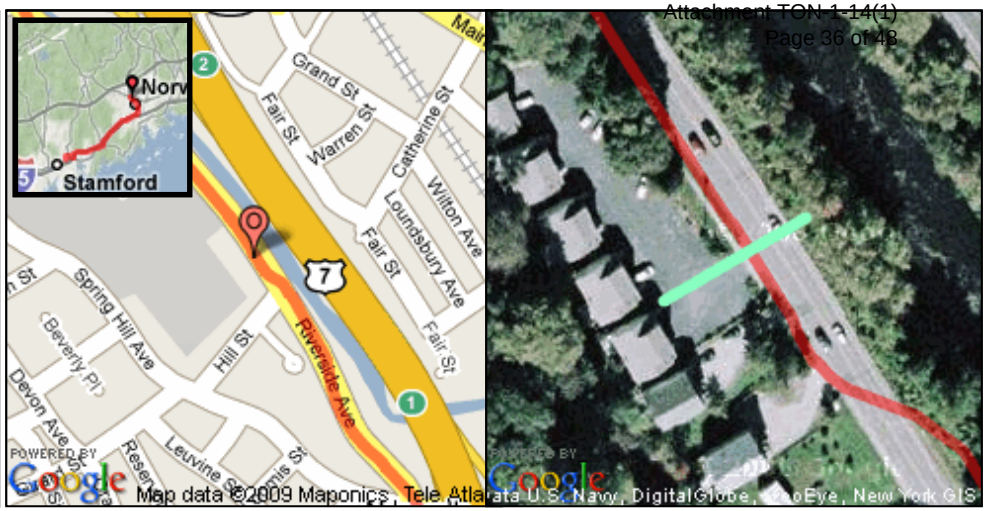

Magnetic Field,

Distance from duct bank centerline (ft)

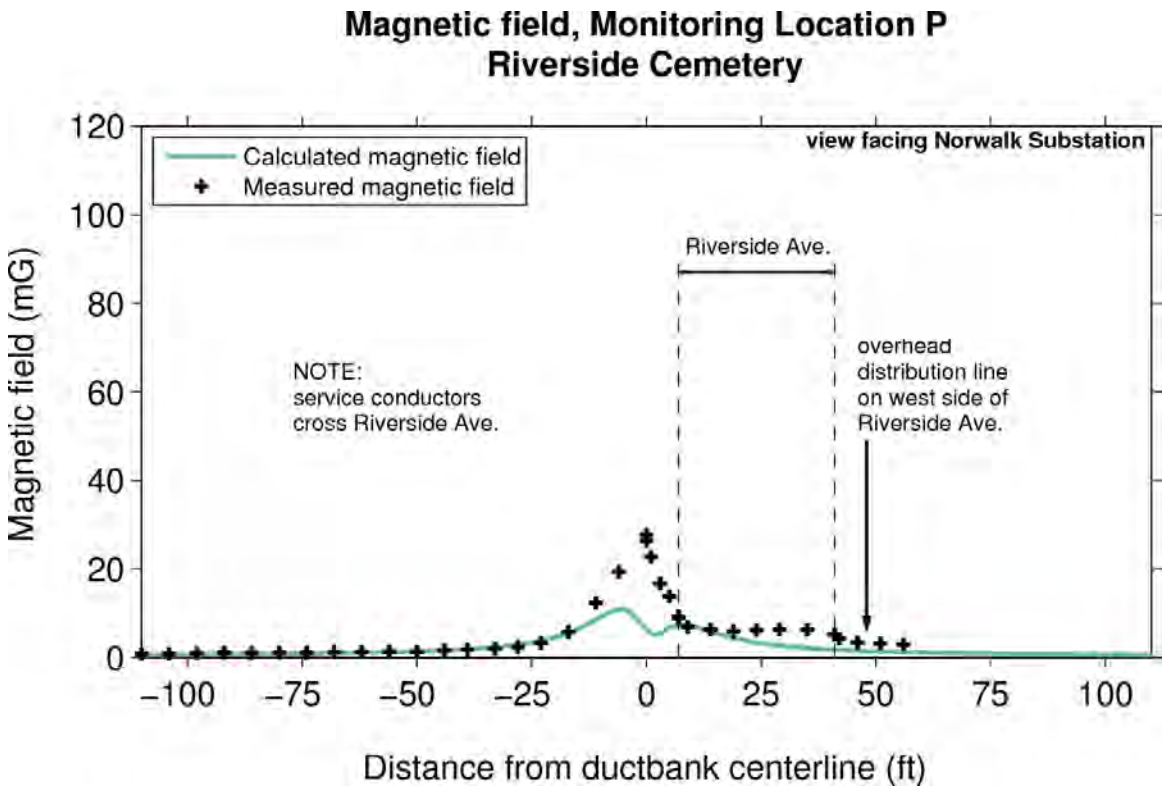
Magnetic field, Monitoring Location P
Riverside Cemetery
Calculated magnetic field
Measured magnetic field
view facing Norwalk Substation
Riverside Ave.
NOTE:
service conductors
cross Riverside Ave.
overhead
distribution line
on west side of
Riverside Ave.
Magnetic field (mG)
Distance from ductbank centerline (ft)
120
100
80
60
40
20
0
−100
−75
−50
−25
0
25
50
75
100

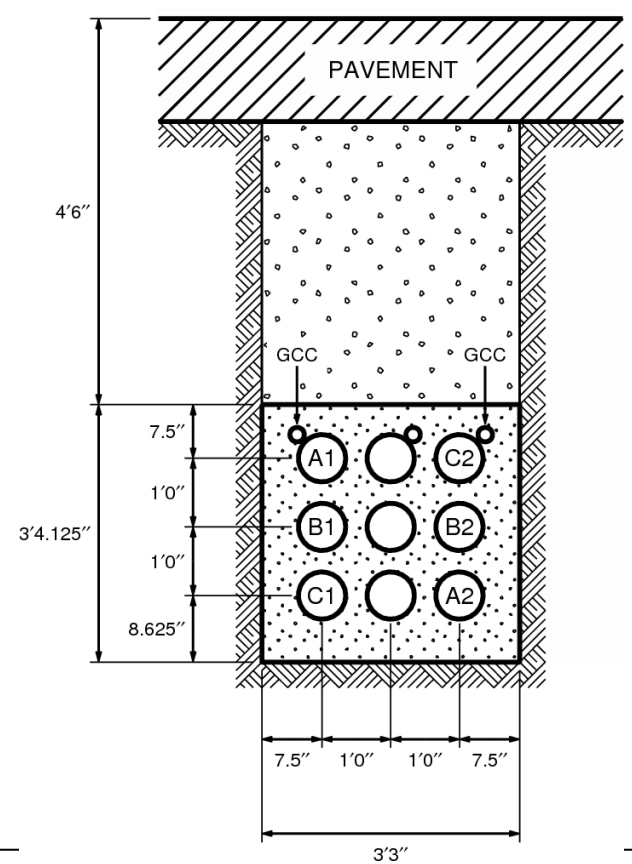
PAVEMENT
4′6″
GCC
GCC
7.5″
1′0″
1′0″
8.625″
3′4.125″
A1
C2
B1
B2
C1
A2
7.5″
1′0″
1′0″
7.5″
3′3″

Appendix D

Measured EMF Levels along the Underground Cable Route

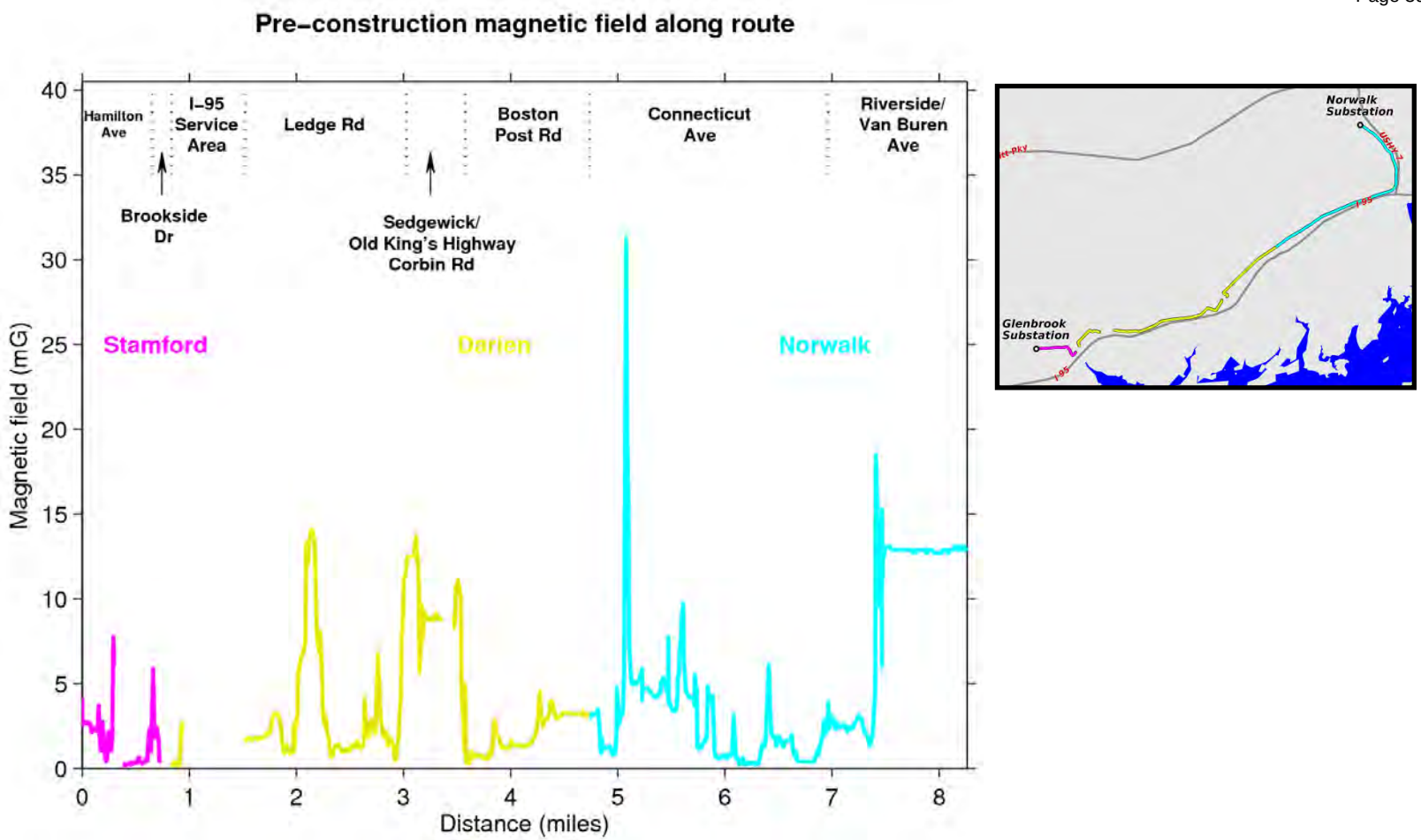

Figure 6. Pre-construction measurements of magnetic fields along the project route.

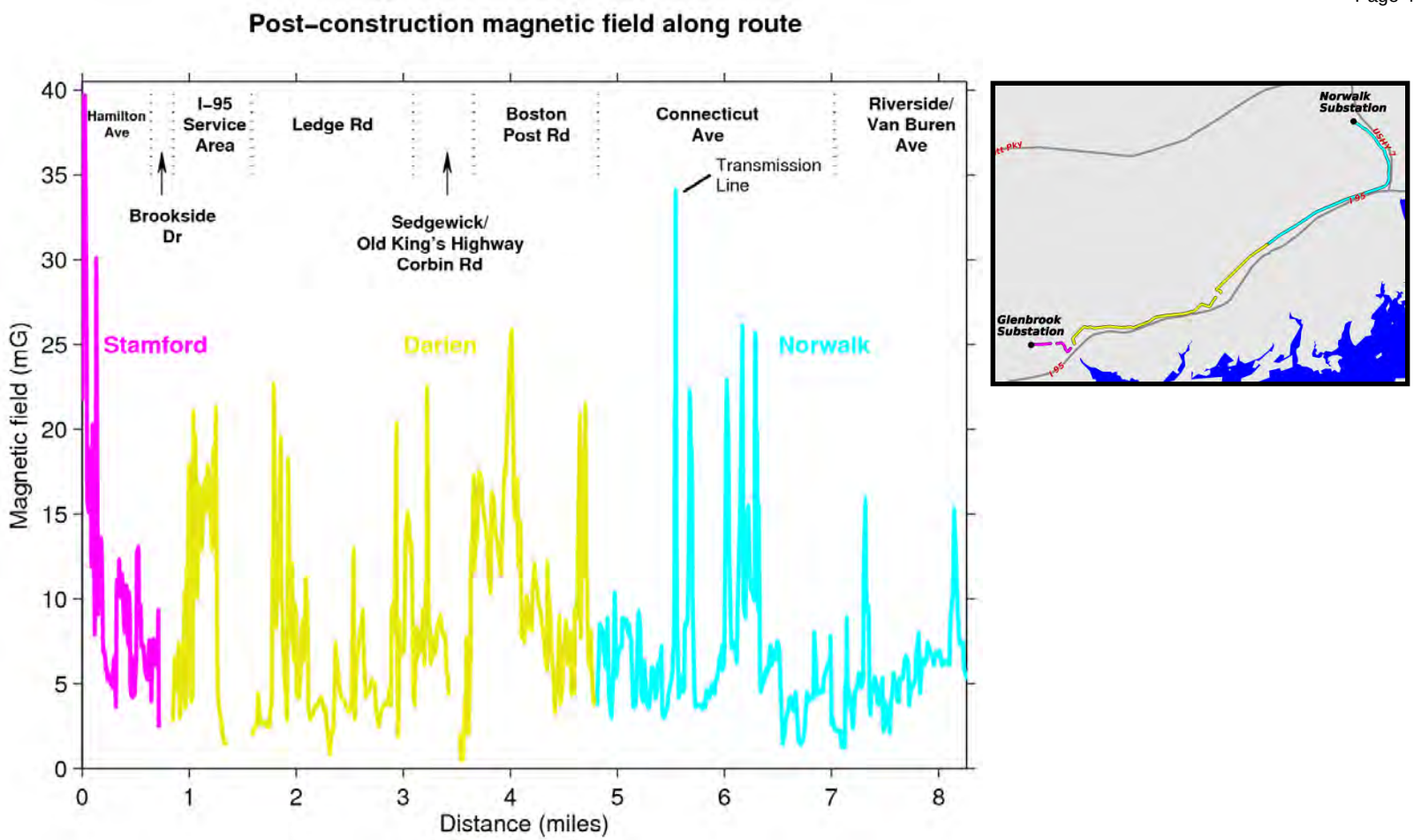

Figure 7. Post-construction measurements of magnetic fields along the project route.

Appendix E

Measured EMF Levels at the Norwalk Substation and Glenbrook Substation

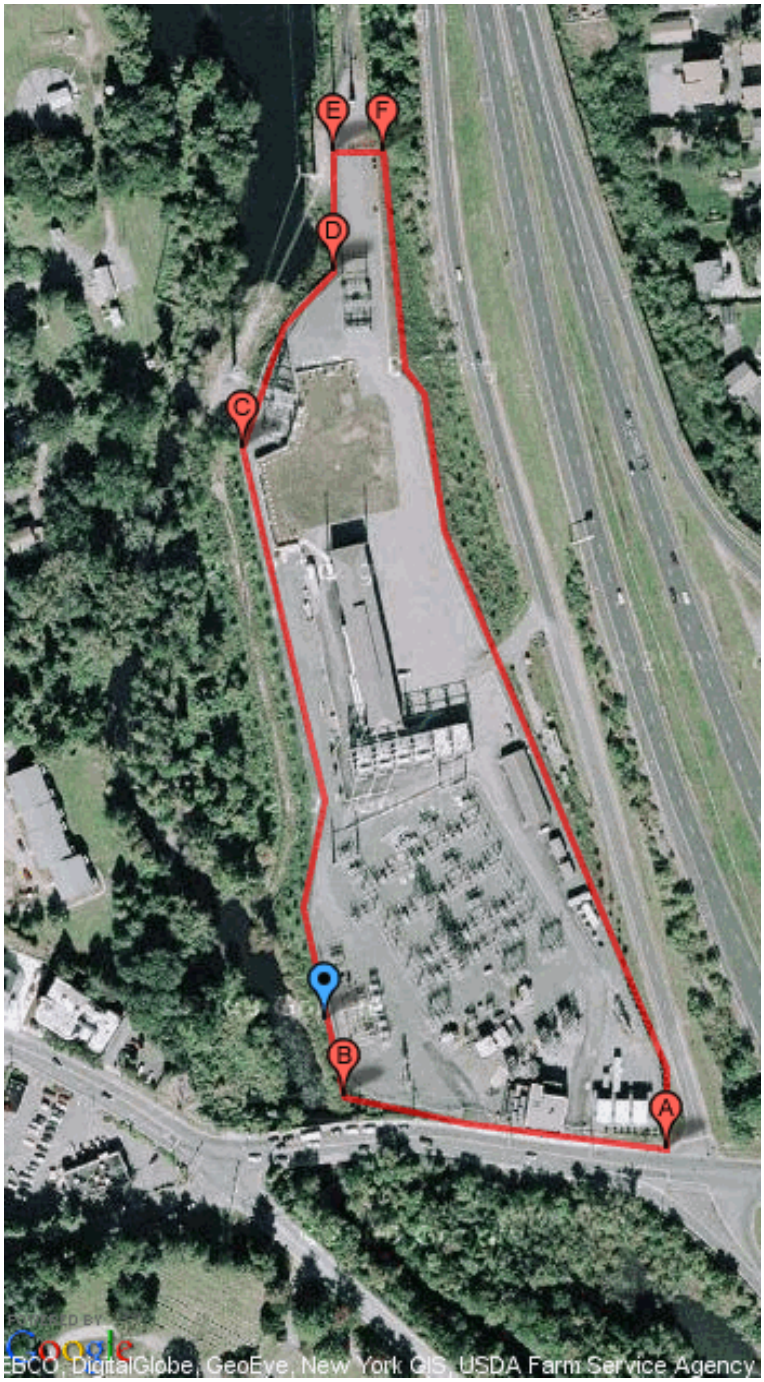

Figure 8. Measurement path along perimeter of the Norwalk Substation. The blue marker is the fence-line reference position for electric-field readings outside the substation perimeter in the vicinity of the cable risers.

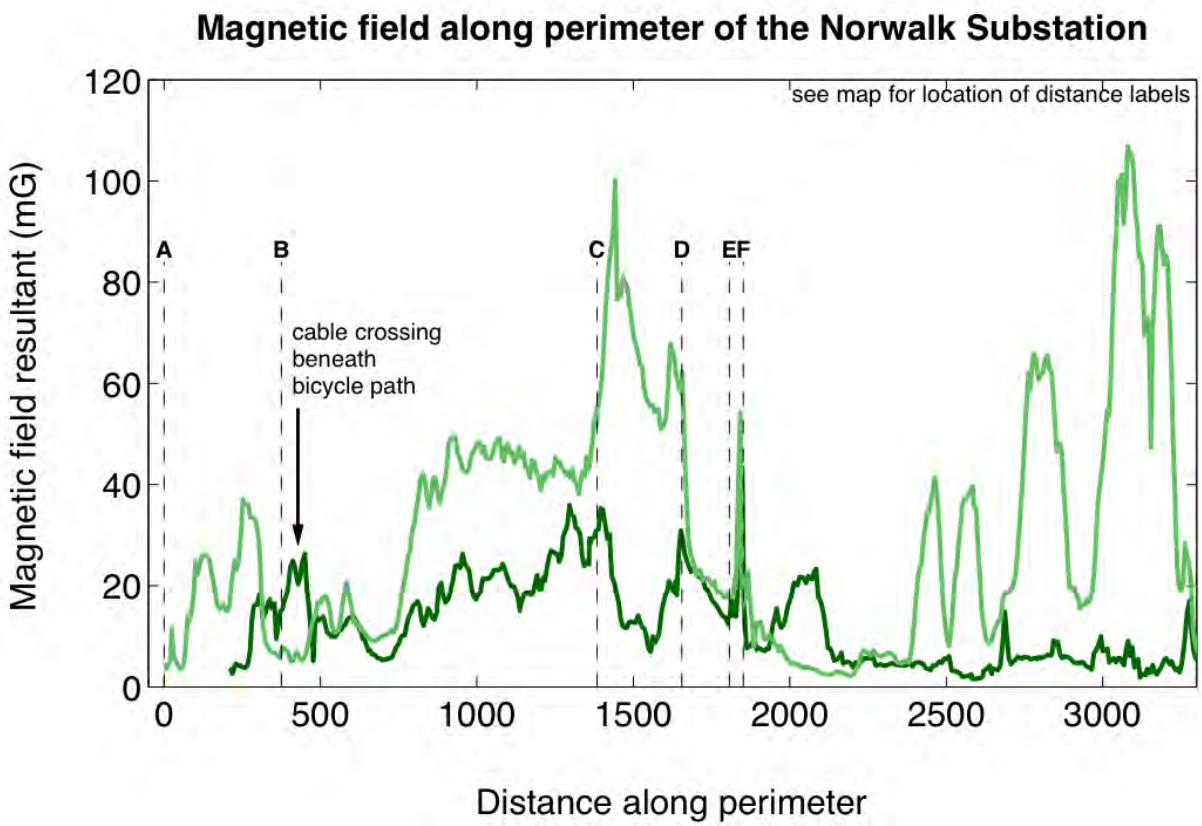

Figure 9. Magnetic field resultant along perimeter of the Norwalk Substation. Pre-energized measurements were recorded on April 3, 2007 before the installation of the Middletown to Norwalk 345 kV circuits (shown in dark green) and post-energized measurements were recorded on April 15, 2009 after the installation of the Middletown to Norwalk 345 kV circuits (shown in light green).

Table 3 Summary of electric field levels (kV/m) measured in the vicinity of cable risers at the Norwalk Substation

Profile perpendicular to substation fence			Profile parallel to substation fence		
Distance from fence (ft)	Electric field resultant (kV/m)		Distance from reference (ft north)	Electric field resultant (kV/m)	
	Pre-energized	Post-energized		Pre-energized	Post-energized
1		0.04	45 *	0.23	0.13
2	0.05	0.04	40	0.21	0.20
4	0.04	0.05	35	0.17	0.11
6	0.04	0.05	30	0.15	0.11
8	0.05	0.06	25	0.12	0.11
10	0.05	0.07	20	0.09	0.09
12	0.06	0.08	15	0.07	0.08
14	0.08	0.09	10	0.09	0.07
16	0.07	0.10	5	0.09	0.06
18	0.08	0.10	0	0.09	0.06
20	0.10	0.11	-5	0.09	0.05
22	0.10	0.12	-10	0.06	0.05
24	0.08	0.12	-15	0.06	0.05
			-20	0.05	0.05
			-25	0.05	0.05
			-30	0.06	0.05
			-35	0.08	0.05
			-40	0.08	0.06
			-45	0.09	0.07
			-50 *	0.10	0.09

* reading within 20 feet of overhead conductors

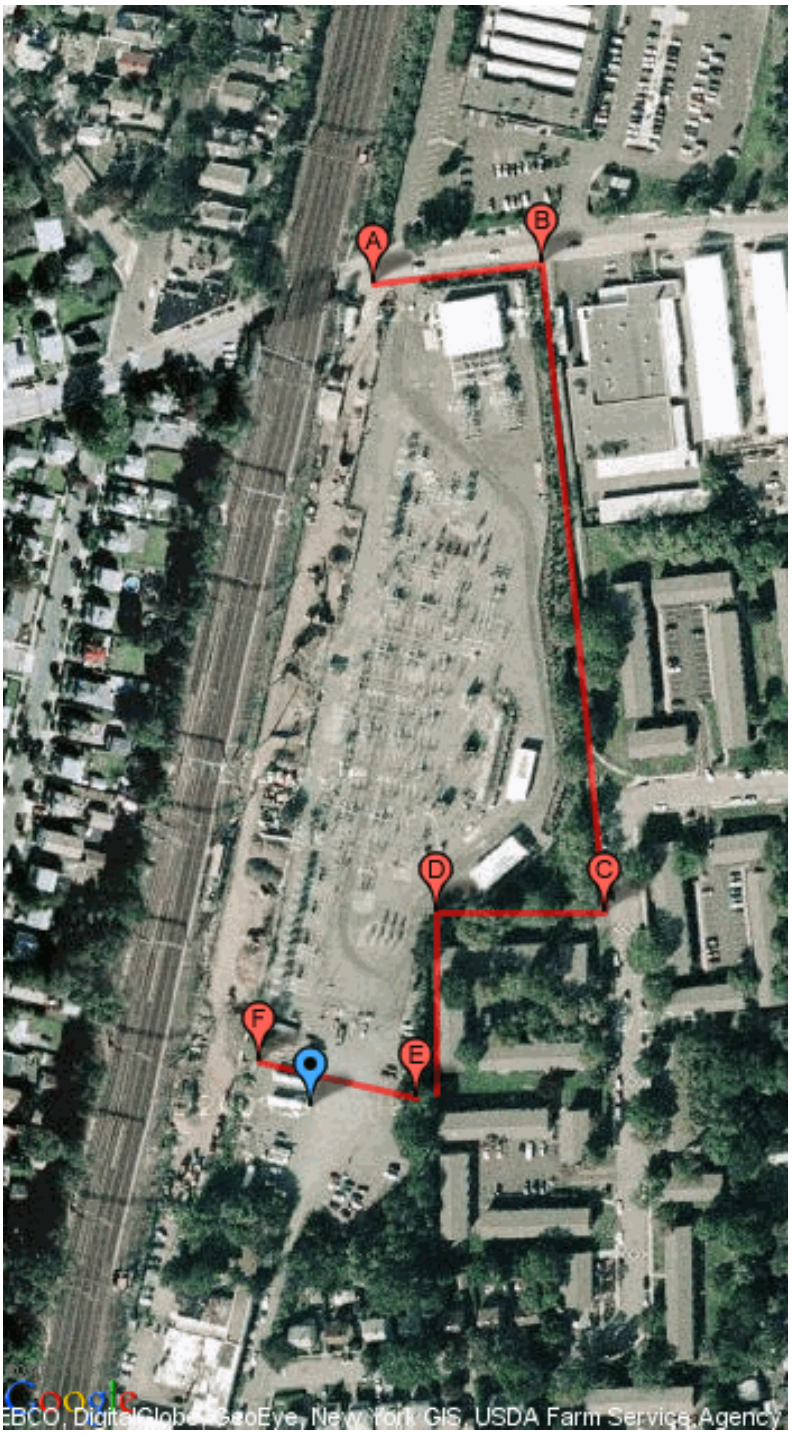

Figure 10. Measurement path along perimeter of the Glenbrook Substation. The blue marker is the fence-line reference position for electric-field readings outside the substation perimeter in the vicinity of the cable risers.

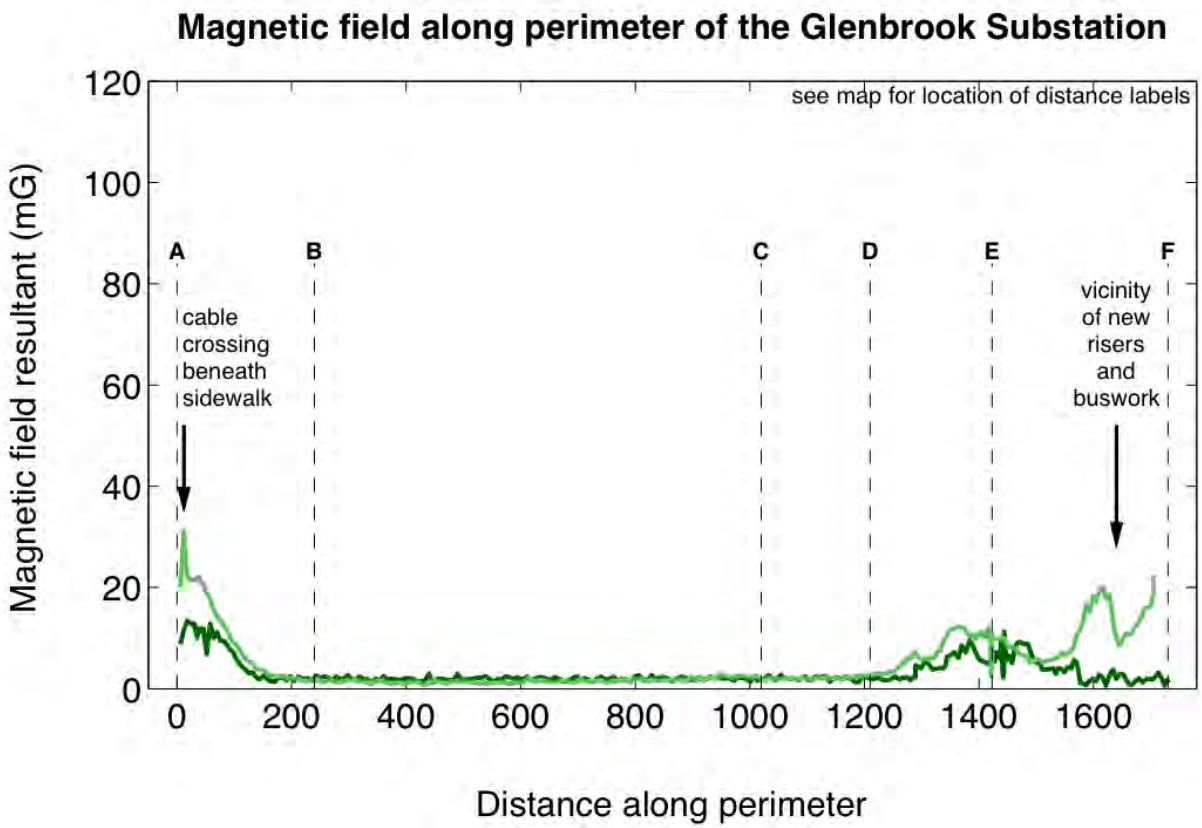

Figure 11. Magnetic Field measurements along perimeter of the Glenbrook Substation. Pre-energized measurements were recorded on April 3, 2007 and post-energized measurements were recorded on April 15, 2009.

Table 4 Summary of electric field levels (kV/m) measured in the vicinity of cable risers at the Glenbrook Substation

Profile perpendicular to substation fence			Profile parallel to substation fence		
Distance from fence (ft)	Electric field resultant (kV/m)		Distance from reference (ft west)	Electric field resultant (kV/m)	
	Pre-energized	Post-energized		Pre-energized	Post-energized
4	0.02	0.06	-30	0.02	0.09
8	0.04	0.08	-25	0.02	0.07
12	0.07	0.08	-20	0.04	0.10
16	0.05	0.12	-15	0.05	0.11
20	0.02	0.08	-10	0.04	0.12
24	0.02	0.09	-5	0.02	0.12
28	0.01	0.08	0	0.01	0.11
30	0.01	0.09	5	0.02	0.10
			10	0.03	0.11
			15	0.04	0.11
			20	0.02	0.11
			25	0.05	0.11
			30	0.10	0.09
			35	0.10	0.09
			40	0.11	0.09
			45	0.11	0.10
			-50	0.09	0.07

Appendix F References

Institute of Electrical and Electronics Engineers (IEEE). 1990. IEEE Guide for the Design, Construction, and Operation of Safe and Reliable Substations for Environmental Acceptance. IEEE Standard 1127-1990.

Institute of Electrical and Electronics Engineers (IEEE). IEEE standard procedures for measurement of power frequency electric and magnetic fields from AC power lines. IEEE Standard 644-1994 (Revision of IEEE Standard 644-1987), 1994a.

Institute of Electrical and Electronics Engineers (IEEE). IEEE recommended practice for instrumentation: specifications for magnetic flux density and electric field strength meters-10 Hz to 3 kHz. IEEE Standard 1308-1994, 1994b.