# NEEDHAM
# ZONING BOARD OF APPEALS
# AGENDA

**THURSDAY, December 14, 2023 - 7:30PM**

| | |
|---|---|
| **Charles River Room**<br>**Public Service Administration Building**<br>**500 Dedham Avenue**<br>**Needham, MA 02492** | **Also livestreamed on Zoom**<br>**Meeting ID: 869-6475-7241**<br>**To join the meeting click this link:**<br>**https://us02web.zoom.us/j/86964757241** |

1. **Minutes** Review and approve Minutes from November 16, 2023 meeting.

2. **7:30PM 30 Wilshire Park**
   Jeremy & Jessica Karlin, owners, applied for a Special Permit under Sections 1.4.6, and any other applicable section of the By-Law to alter, enlarge and extend a pre-existing, non-conforming single-family to allow the demolition of an existing deck and stairs and replace it with a basement and a family room above. The property is located at 30 Wilshire Park, Needham, MA in the Single-Residence B (SRB) District. (Continued from October 19, 2023)

3. **7:30PM 460 Hillside Avenue**
   Dish Wireless, LLC, applied to the Board of Appeals for a Special Permit under Sections 6.7.3.3 (b) (c) and any other applicable section of the By-Law to install as part of their wireless telecommunications network some of the following equipment: 3 antennas, 6 remote radio units, 3 junctions boxes, 3 fiber cables, and 3 power cables. The property is located at 460 Hillside Avenue, Needham, MA in the Industrial (I) District.

4. **7:45PM 320 Grove Street**
   Corbin Petro and Jessica Gelman, owners, applied to the Board of Appeals for a Variance under MGL 40A, Section 10, 4.2.3, and Section 7.5.3 and any other applicable section of the Needham By-Law to seek zoning relief to allow side setbacks of no less than 15 feet where 25 feet are allowed due to unusual soil, shape of topography of the land. This request is associated with the demolition and reconstruction of an existing non-conforming single family home. The property is located at 320 Grove Street, Needham, MA in the Single-Residence A (SRA) District.

5. **8:00PM 1688 Central Avenue**
   Holly Clarke, Gregg Darish, Robert DiMase, Matthew and Nicole Heideman, Carl Jonasson, Ann and Peter Lyons, and Eileen Sullivan, appellants, applied to the Board of Appeals for an Appeal of Building Inspector Decision (ABID) of Building Permit BC23-10079 issued to Matt Borrelli and Needham Enterprise LLC dated September 19, 2023, for the construction of a childcare facility. The ABID concludes that the Building Permit plans on file do not demonstrate that the construction, alteration or use as proposed complies with the Zoning By Laws as limited by the Dover Amendment MGL 40A, Section 3 The property is located at 1688 Central Street, Needham, MA in the Single-Residence A (SRA) District. (Continued from November 16, 2023)

**Next ZBA Meeting – January 18, 2024**

# NEEDHAM
# ZONING BOARD OF APPEALS
# MINUTES
## THURSDAY, November 16, 2023 - 7:30PM

| Charles River Room<br>Public Service Administration Building<br>500 Dedham Avenue<br>Needham, MA 02492 | Also livestreamed on Zoom<br>Meeting ID: 869-6475-7241 |
|---|---|

Pursuant to notice published at least 48 hours prior to this date, a meeting of the Needham Board of Appeals was held in the Charles River Room, Public Services Administration Building, 500 Dedham Avenue, Needham and remotely on Zoom on Thursday, November 16, 2023 at 7:30 p.m.

**BOARD MEMBERS PRESENT:** Jonathan D. Tamkin, Chair, Howard S. Goldman, Vice-Chair, Peter Friedenberg and Valentina Elzon.

**BOARD MEMBER(S) ABSENT:** Nikolaos M. Ligris

**STAFF PRESENT:** Daphne M. Collins, Zoning Specialist.

---

Mr. Tamkin, Chair presided and opened the meeting at 7:30 p.m.

### 1. MINUTES OF OCTOBER 19, 2023

Mr. Goldman moved to approve the minutes of October 19, 2023. Mr. Friedenberg seconded the motion. The motion was unanimously approved.

### 2. Administrative Matters:

- **Valentina Elzon** – Mr. Tamkin welcomed and introduced Valentina Elzon, the new Associate Member appointed by the Select Board to fill the vacancy held by Mr. Ligris.

- **24 Webster Street** – Decision document executed.

- **Board Rules Article V, Section 2 – Withdrawal – Amendment**
  Mr. Goldman moved to adopt the written proposal to amend *Article V, Section 2 Withdrawal* of the Board Rules introduced at the meeting of October 19, 2023. Mr. Friedenberg seconded the motion. The motion was unanimously approved.

### 3. CASE #1 30 WILSHIRE PARK CONTINUED TO DECEMBER 18, 2023

Mr. Goldman moved to accept the request to continue the public hearing to December 18, 2023 and for it to be the last continuance offered on the matter. Mr. Friedenberg seconded the motion. The motion was unanimously approved.

**4. CASE #2 1688 CENTRAL AVENUE CONTINUED TO DECEMBER 18, 2023**

The meeting adjourned at 10:30 p.m.

A summary of the discussions on each subject, a list of the documents and other exhibits used at the meeting, the decisions made, and the actions taken at each meeting, including a record of all votes, are set forth in a detailed decision signed by the members voting on the subject and filed with the Town Clerk.

The hearings can be viewed at http://www.needhamchannel.org/watch-programs/ and https://www.youtube.com/@TownofNeedhamMA/videos

# FIRST FLOOR

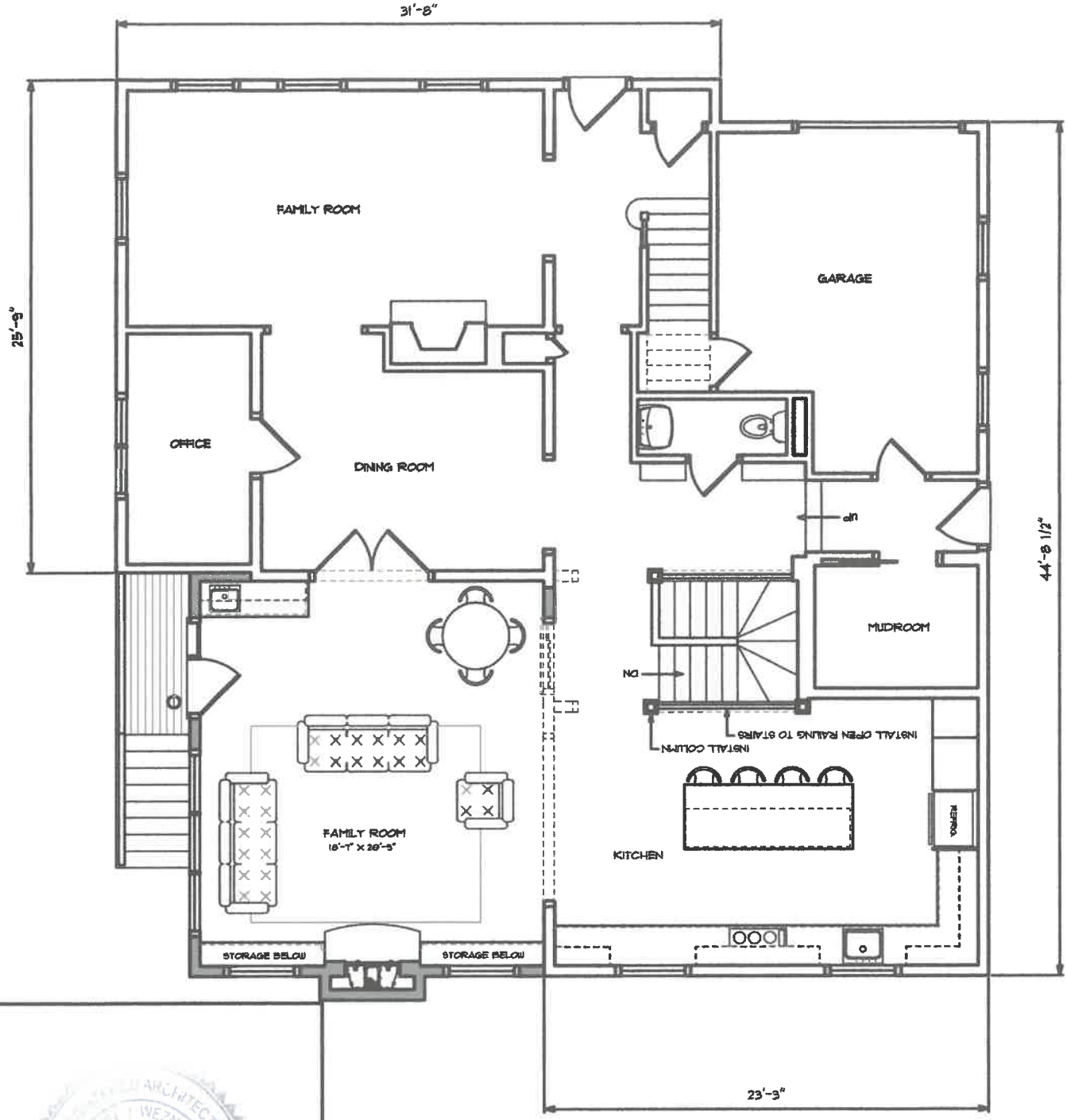


EXISTING 1ST FLOOR LIVING SPACE : 1,403.00 S.F.

ADDITIONAL SPACE : 385.00 S.F.

TOTAL 1ST FLOOR SPACE : 1,788.00 S.F.

30 WILSHIRE PARK, NEEDHAM, MA

# SECOND FLOOR

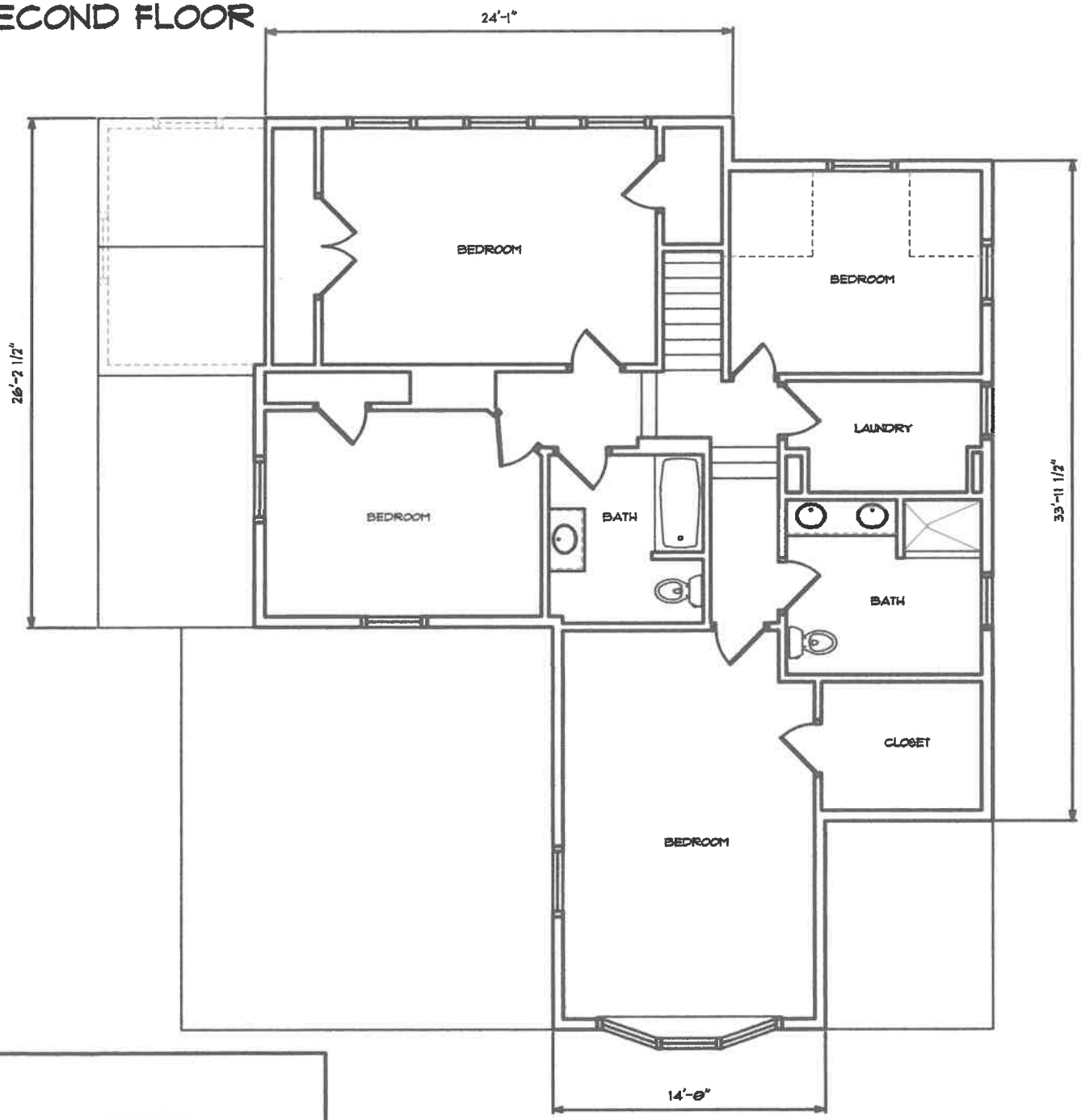


EXISTING 2ND FLOOR LIVING SPACE : 1,214.00 S.F.

EXISTING 1ST FLOOR LIVING SPACE : 1,403.00 S.F.

ADDITIONAL SPACE : 385.00 S.F.

TOTAL FLOOR SPACE : 3,002.00 S.F.

( 3,002 / 7,184 ) TOTAL FAR : .4178 ( 42% )

30 WILSHIRE PARK, NEEDHAM, MA

## Daphne Collins

**From:** Joseph Prondak
**Sent:** Tuesday, December 5, 2023 4:22 PM
**To:** Daphne Collins
**Subject:** 30 Wilshire

Hello Daphne,

This email will serve to confirm that I reviewed the applicant's re-submittal and the existing and proposed FARs remain unchanged.

The existing home conforms with an FAR just under.38 and the proposal would bring the FAR to .42, creating a new non-conformity.

Sincerely,

Joe Prondak
Needham Building Commissioner
781-455-7550 x308

# ZBA Application For Hearing

RECEIVED TOWN CLERK
NEEDHAM, MA 02492
2023 NOV 28 PM 4:30

Applicants must consult with the Building Inspector prior to filing this Application. *Failure to do so will delay the scheduling of the hearing.*

## Applicant Information

| | | | |
|---|---|---|---|
| Applicant Name | **DISH Wireless LLC** | | Date: **11/20/23** |
| Applicant Address | **5701 South Santa Fe Blvd, Littleton, CO 80120** | | |
| Phone | | email | |

Applicant is ☒Owner; ☐Tenant; ☐Purchaser; ☐Other_____

If not the owner, a letter from the owner certifying authorization to apply must be included

| | | | |
|---|---|---|---|
| Representative Name | **Kris Kopycinski and Andrew Gorham** | | |
| Address | **100 Apollo Dr, Suite 303, Chelmsford, MA 01824** | | |
| Phone | **978-799-9520** | email | **agorham@nbcllc.com** |

Representative is ☐Attorney; ☒Contractor; ☐Architect; ☐Other_____

Contact ☐Me ☒Representative in connection with this application.

## Subject Property Information

| | | | |
|---|---|---|---|
| Property Address | **460 Hillside Ave** | | |
| Map/Parcel Number | **199/100.0-0003-0000.0** | Zone of Property | **Industrial** |

Is property within 100 feet of wetlands, 200 feet of stream or in flood Plain?
☐Yes ☒No

Is property ☐Residential or ☒Commercial

If residential renovation, will renovation constitute "new construction"?
☐Yes ☐No

If commercial, does the number of parking spaces meet the By-Law requirement? ☒Yes ☐No
Do the spaces meet design requirements? ☒Yes ☐ No

Application Type (*select one*): ☒Special Permit ☐Variance ☐Comprehensive Permit ☐Amendment ☐Appeal Building Inspector Decision

# ZBA Application For Hearing

| Existing Conditions: |
|---|
| 4 story commercial building. Existing Wireless Telecommunications Facility. |
| DISH Wireless to add to existing facility |
| |

| Statement of Relief Sought: |
|---|
| Dish proposes to place 3 antennas, 6 RRUs, 3 junction box(s), 3 fiber cable(s), |
| at the 37/46 foot RAD. Dish will require a lease area for ground equipment. |
| |

| Applicable Section(s) of the Zoning By-Law: |
|---|
| 6.7.3.3 |

**If application under Zoning Section 1.4 above, list non-conformities:**

| | Existing Conditions | Proposed Conditions |
|---|---|---|
| **Use** | | |
| **# Dwelling Units** | | |
| **Lot Area** *(square feet)* | | |
| **Front Setback** *(feet)* | | |
| **Rear Setback** *(feet)* | | |
| **Left Setback** *(feet)* | | |
| **Right Setback** *(feet)* | | |
| **Frontage** *(feet)* | | |
| **Lot Coverage** *(%)* | | |
| **FAR** *(Floor area divided by the lot area)* | | |
| *Numbers must match those on the certified plot plan and supporting materials* | | |

# ZBA Application For Hearing

| Date Structure Constructed including additions: 1943 | Date Lot was created: |
|---|---|

| Submission Materials | Provided |
|---|---|
| Certified Signed Plot Plan of Existing and Proposed Conditions *(Required)* | x |
| Application Fee, check made payable to the Town of Needham Check holders name, address, and phone number to appear on check and in the Memo line state: "ZBA Fee – Address of Subject Property" *(Required)* | x |
| If applicant is tenant, letter of authorization from owner *(Required)* | x |
| Electronic submission of the complete application with attachments *(Required)* | x |
| Elevations of Proposed Conditions *(when necessary)* | |
| Floor Plans of Proposed Conditions *(when necessary)* | |

Feel free to attach any additional information relative to the application. Additional information may be requested by the Board at any time during the application or hearing process.

❖❖❖❖

I hereby request a hearing before the Needham Zoning Board of Appeals. I have reviewed the Board Rules and instructions.

I certify that I have consulted with the Building Inspector 9/28/23
*date of consult*

Date: 11/20/23 Applicant Signature Andrew Gorham

*An application must be submitted to the Town Clerk's Office at townclerk@needhamma.gov and the ZBA Office at dcollins@needhamma.gov*

Dear Needham Zoning Board of Appeals:

My name is Andrew Gorham, I work for Network Building + Consulting (NB+C), and we are applying for this special permit located at 460 Hillside Ave on behalf of DISH Wireless. To provide some context, in early 2020 T-Mobile and Sprint merged to become one company. The approval of such a merger was allowed by the FCC in large part due to DISH Wireless's indication that they would build out their own wireless broadband network, effectively becoming the fourth major nationwide carrier. DISH is currently in the process of building out its wireless telecommunications network, and the proposed site, to be located in the Town of Needham, is one of many sites that will support DISH Wireless's commitment to build a wireless network from the ground-up. This network is deployed with a systems architecture able to take full advantage of advances in wireless technology. The DISH Wireless OpenRAN network is a stand-alone virtualized wireless network, and the first of its kind: smarter, faster and more secure. Over the next decade, DISH Wireless's advanced network will improve connectivity across the United States, starting with the Town of Needham and the surrounding areas.

DISH will comply with all local, state, and federal regulations throughout the process of ultimately getting this site built. The maintenance schedule for the antennas and related equipment will be determined at a later date in time, once the site has been built out and is active.

For this particular site, we have identified this building as a strong candidate in part due to the various other carriers already located on the premises. Furthermore, please see in the supporting documents a portion of the signed DISH lease with Hillside Investment Group, LLC, signed by the manager Kenneth Shapiro, as well as the Letter of Authorization from Ken.

Please feel free to reach me at agorham@nbcllc.com with any questions, comments, or concerns.

Thank you for your time and consideration,
Andrew Gorham

DISH Wireless L.L.C. SITE ID:

# BOBOS01058A

DISH Wireless L.L.C. SITE ADDRESS:

# 460 HILLSIDE AVENUE
# NEEDHAM, MA 02494

## SCOPE OF WORK

THIS IS NOT AN ALL INCLUSIVE LIST. CONTRACTOR SHALL UTILIZE SPECIFIED EQUIPMENT PART OR ENGINEER APPROVED EQUIVALENT. CONTRACTOR SHALL VERIFY ALL NEEDED EQUIPMENT TO PROVIDE A FUNCTIONAL SITE. THE PROJECT GENERALLY CONSISTS OF THE FOLLOWING:

SECTOR SCOPE OF WORK:
- INSTALL (3) PROPOSED PANEL ANTENNAS (1 PER SECTOR)
- INSTALL (3) PROPOSED ANTENNA MOUNTS (1 PER SECTOR)
- INSTALL (2) PROPOSED ANTENNA CONCEALMENTS (1 PER BETA & GAMMA SECTORS)
- INSTALL PROPOSED JUMPERS
- INSTALL (6) PROPOSED RRUs (2 PER SECTOR)
- INSTALL (3) PROPOSED RRU MOUNTS (1 PER SECTOR)
- INSTALL (3) PROPOSED OVER VOLTAGE PROTECTION DEVICE (OVP) (1 PER SECTOR)
- INSTALL (3) PROPOSED DC POWER CABLES (1 PER SECTOR)
- INSTALL (3) PROPOSED FIBER TRUNKS (1 PER SECTOR)
- INSTALL PROPOSED CABLE TRAY

ROOFTOP SCOPE OF WORK:
- INSTALL (1) PROPOSED BBU IN CABINET
- INSTALL (1) PROPOSED EQUIPMENT CABINET
- INSTALL (1) PROPOSED NEMA 3 TELCO-FIBER BOX
- INSTALL (1) PROPOSED GPS UNIT

## SITE INFORMATION

| | |
|---|---|
| PROPERTY OWNER: | KEW MANAGEMENT GROUP, LLC |
| ADDRESS: | 460 HILLSIDE AVENUE<br>NEEDHAM, MA 02494 |
| TOWER TYPE: | ROOFTOP |
| TOWER CO SITE ID: | N/A |
| TOWER APP NUMBER: | N/A |
| COUNTY: | NORFOLK |
| LATITUDE (NAD 83): | 42° 17' 28.352" N<br>42.291209 N |
| LONGITUDE (NAD 83): | 71° 14' 10.971" W<br>71.236381 W |
| ZONING JURISDICTION: | TOWN OF NEEDHAM |
| ZONING DISTRICT: | OFFICE BUILDING – MFG |
| PARCEL NUMBER: | NEED-100-003 |
| OCCUPANCY GROUP: | U |
| CONSTRUCTION TYPE: | II-B |
| POWER COMPANY: | EVERSOURCE/NSTAR |
| TELEPHONE COMPANY: | COMCAST |

## PROJECT DIRECTORY

| | |
|---|---|
| APPLICANT: | DISH Wireless L.L.C.<br>5701 SOUTH SANTA FE DRIVE<br>LITTLETON, CO 80120 |
| PROP. MANAGER: | KEW MANAGEMENT GROUP, LLC.<br>460 HILLSIDE AVENUE<br>NEEDHAM, MA 02494<br>(781) 455-8222 |
| SITE DESIGNER: | NB+C ENGINEERING SERVICES, LLC<br>100 APOLLO DRIVE, SUITE 303<br>CHELMSFORD, MA 01824<br>(978) 856-8308 |
| SITE ACQUISITION: | ANDREW GORHAM<br>AGORHAM@NBCLLC.COM |
| CONSTRUCTION MANAGER: | AARON CHANDLER<br>AARON.CHANDLER@DISH.COM |
| RF ENGINEER: | SAMEER PARAKKAVETTY<br>SAMEER.PARAKKAVETTY@DISH.COM |

## MASSACHUSETTS CODE COMPLIANCE

ALL WORK SHALL BE PERFORMED AND MATERIALS INSTALLED IN ACCORDANCE WITH THE CURRENT EDITIONS OF THE FOLLOWING CODES AS ADOPTED BY THE LOCAL GOVERNING AUTHORITIES. NOTHING IN THESE PLANS IS TO BE CONSTRUED TO PERMIT WORK NOT CONFORMING TO THESE CODES:

| CODE TYPE | CODE |
|---|---|
| BUILDING | MA STATE BUILDING CODE, 9TH EDITION (780 CMR)/2015 IBC W/ AMENDMENTS |
| MECHANICAL | MECHANICAL CODE 2015 OF MASSACHUSETTS/2015 IMC W/ AMENDMENTS |
| ELECTRICAL | MA ELECTRICAL CODE/2020 NEC W/ AMENDMENTS |

## SITE PHOTO

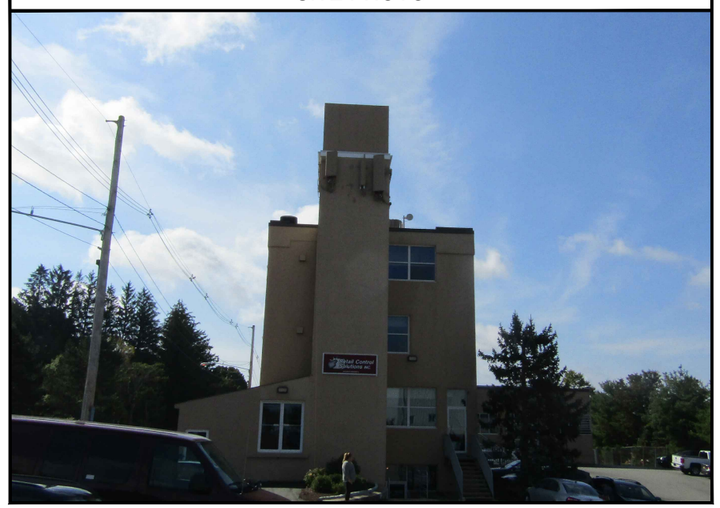

UNDERGROUND SERVICE ALERT - 811 DIG SAFE
UTILITY NOTIFICATION CENTER OF MASSACHUSETTS
(888) 344-7233
WWW.DIGSAFE.COM

CALL 3 WORKING DAYS UTILITY NOTIFICATION PRIOR TO CONSTRUCTION

## DIRECTIONS

**DIRECTIONS FROM BOSTON, LOGAN AIRPORT:**

DESTINATION IS APPROXIMATELY 20 MILES FROM AIRPORT. THIS ROUTE HAS TOLLS. GET ON I-90 W FROM TRANSPORTATION WAY (TAKE TED WILLIAMS TUNNEL = 13'-9" CLEARANCE). AT END OF TUNNEL, KEEP TO THE LEFT (WEST 90 WORCESTER). TAKE EXIT 123A (WALTHAM / PROVIDENCE RI) AND FOLLOW SIGNS TOWARD I-95 S (DEDHAM / PROVIDENCE RI). TAKE EXIT 35C (HIGHLAND AVE NEEDHAM). AT END OF OFFRAMP, TURN RIGHT ONTO HIGHLAND AVENUE. AFTER 0.7 MILES, TURN RIGHT ONTO WEST STREET. AFTER 500 FEET, TURN LEFT ONTO HILLSIDE AVENUE. AFTER 0.1 MILES, TURN LEFT INTO DRIVEWAY MARKED AS 464 HILLSIDE AVENUE. AFTER 200 FEET, TURN RIGHT. DESTINATION IS ON LEFT.

## SHEET INDEX


| SHEET NO. | SHEET TITLE |
|---|---|
| T-1 | TITLE SHEET |
| A-1 | BUILDING PLAN |
| A-2 | ANTENNA PLAN, ELEVATION AND SCHEDULE |
| A-3 | BUILDING ELEVATION |
| A-4 | EQUIPMENT PLATFORM AND H-FRAME DETAILS |
| A-5 | EQUIPMENT DETAILS |
| A-6 | EQUIPMENT DETAILS |
| E-1 | ELECTRICAL/FIBER ROUTE PLAN AND NOTES |
| E-2 | ELECTRICAL DETAILS |
| E-3 | ELECTRICAL ONE-LINE & PANEL SCHEDULE |
| G-1 | GROUNDING PLANS AND NOTES |
| G-2 | GROUNDING DETAILS |
| G-3 | GROUNDING DETAILS |
| RF-1 | RF CABLE COLOR CODE |
| GN-1 | LEGEND AND ABBREVIATIONS |
| GN-2 | RF SIGNAGE |
| GN-3 | GENERAL NOTES |
| GN-4 | GENERAL NOTES |
| GN-5 | GENERAL NOTES |
| GN-6 | PMI CHECKLIST & NOTES |
| ST-1 | CANISTER DETAILS |
| ST-2 | CONNECTION DETAILS |
| ST-3 | BILL OF MATERIALS |


## GENERAL NOTES

THE FACILITY IS UNMANNED AND NOT FOR HUMAN HABITATION. A TECHNICIAN WILL VISIT THE SITE AS REQUIRED FOR ROUTINE MAINTENANCE. THE PROJECT WILL NOT RESULT IN ANY SIGNIFICANT DISTURBANCE OR EFFECT ON DRAINAGE. NO SANITARY SEWER SERVICE, POTABLE WATER, OR TRASH DISPOSAL IS REQUIRED AND NO COMMERCIAL SIGNAGE IS PROPOSED.

## 11"x17" PLOT WILL BE HALF SCALE UNLESS OTHERWISE NOTED

CONTRACTOR SHALL VERIFY ALL PLANS, EXISTING DIMENSIONS, AND CONDITIONS ON THE JOB SITE, AND SHALL IMMEDIATELY NOTIFY THE ENGINEER IN WRITING OF ANY DISCREPANCIES BEFORE PROCEEDING WITH THE WORK.

## VICINITY MAP

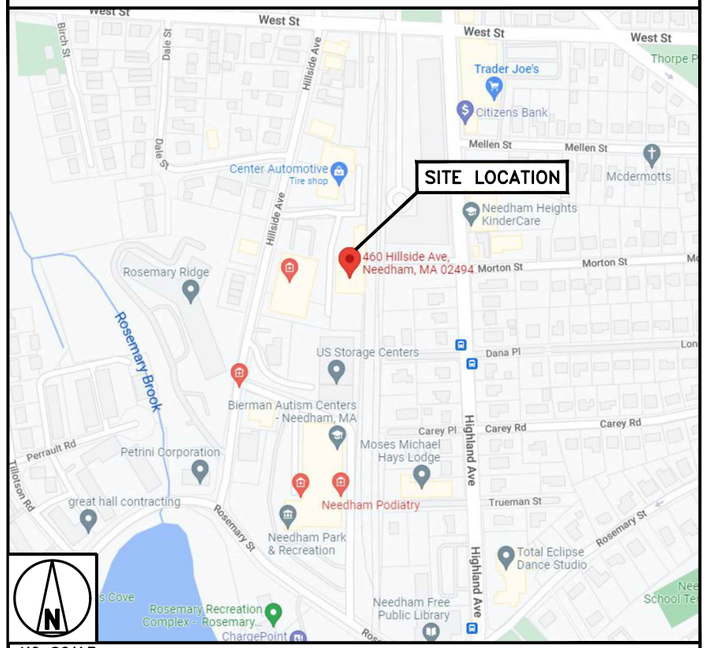


NO SCALE

5701 SOUTH SANTA FE DRIVE
LITTLETON, CO 80120

NB+C ENGINEERING SERVICES, LLC.

100 APOLLO DRIVE
SUITE 303
CHELMSFORD, MA 01824
(978) 856-8308

COMMONWEALTH OF MASSACHUSETTS
KRUPAKAR KOLLEPARA
NO. 50019
REGISTERED PROFESSIONAL ENGINEER

IT IS A VIOLATION OF LAW FOR ANY PERSON, UNLESS THEY ARE ACTING UNDER THE DIRECTION OF A LICENSED PROFESSIONAL ENGINEER, TO ALTER THIS DOCUMENT.

| DRAWN BY: | CHECKED BY: | APPROVED BY: |
|---|---|---|
| CSG | NSB | DRG |

RFDS REV #: 1

CONSTRUCTION DOCUMENTS

SUBMITTALS

| REV | DATE | DESCRIPTION |
|---|---|---|
| 0 | 07/28/2023 | ISSUED FOR REVIEW |
| 1 | 08/30/2023 | BILL OF MATERIALS |

A&E PROJECT NUMBER
100753

DISH Wireless L.L.C.
PROJECT INFORMATION
BOBOS01058A
460 HILLSIDE AVENUE
NEEDHAM MA, 02494

SHEET TITLE
TITLE SHEET

SHEET NUMBER
T-1

## NOTES

1. CONTRACTOR SHALL FIELD VERIFY ALL DIMENSIONS.
2. CONTRACTOR SHALL MAINTAIN A 10'–0" MINIMUM SEPARATION BETWEEN THE PROPOSED GPS UNIT, TRANSMITTING ANTENNAS AND EXISTING GPS UNITS.

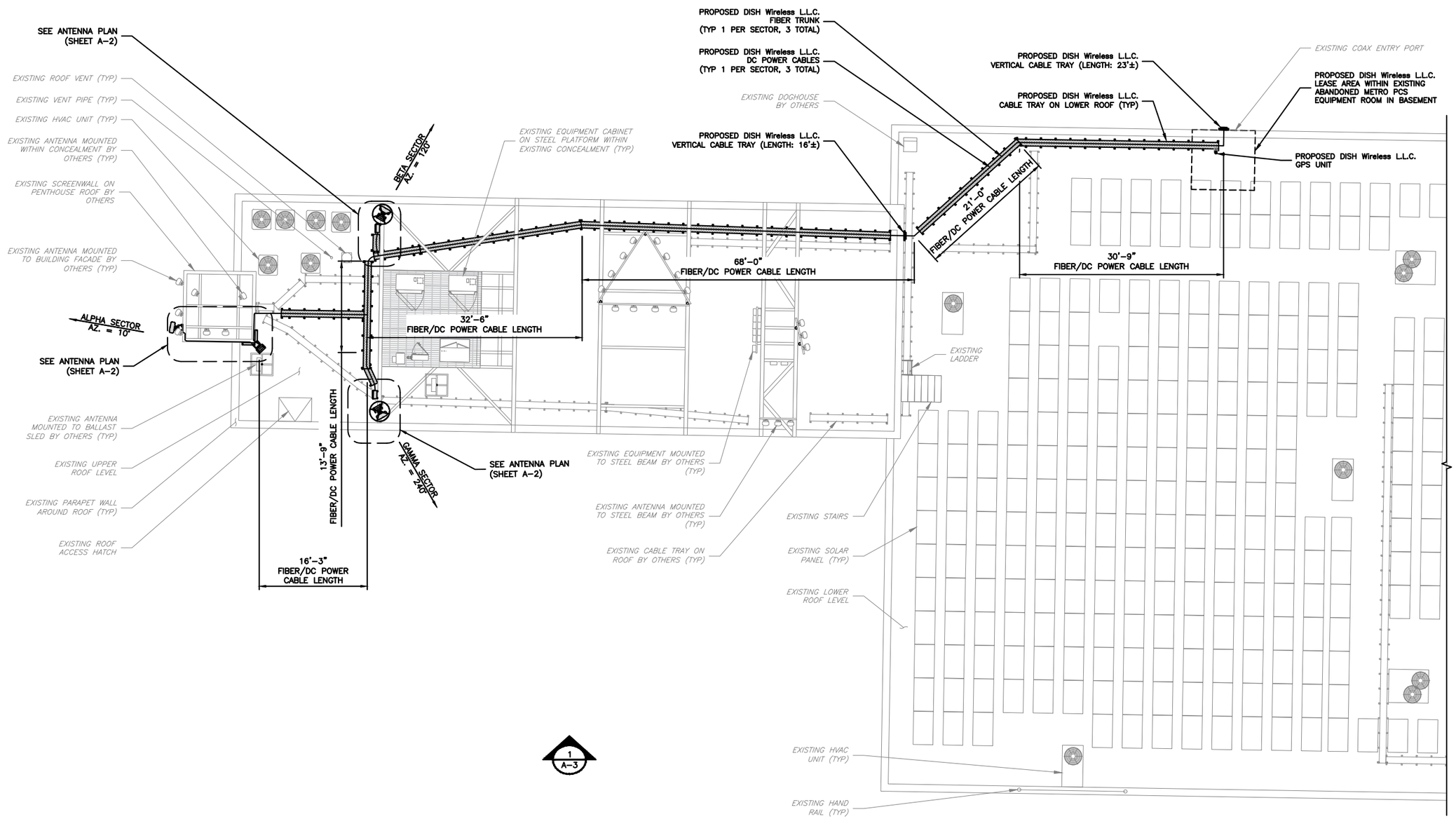


BUILDING PLAN

8' 4' 0 8' 16'
1/8"=1'–0"

1


dish wireless.
5701 SOUTH SANTA FE DRIVE
LITTLETON, CO 80120

NB+C TOTALLY COMMITTED.
NB+C ENGINEERING SERVICES, LLC.
100 APOLLO DRIVE
SUITE 303
CHELMSFORD, MA 01824
(978) 856-8308


COMMONWEALTH OF MASSACHUSETTS
KRUPAKAR KOLLEPARA
NO. 30019
REGISTERED PROFESSIONAL ENGINEER


IT IS A VIOLATION OF LAW FOR ANY PERSON, UNLESS THEY ARE ACTING UNDER THE DIRECTION OF A LICENSED PROFESSIONAL ENGINEER, TO ALTER THIS DOCUMENT.


| DRAWN BY: | CHECKED BY: | APPROVED BY: |
|---|---|---|
| CSG | NSB | DRG |

RFDS REV #: 1

CONSTRUCTION DOCUMENTS

SUBMITTALS

| REV | DATE | DESCRIPTION |
|---|---|---|
| 0 | 07/28/2023 | ISSUED FOR REVIEW |
| 1 | 08/30/2023 | BILL OF MATERIALS |

A&E PROJECT NUMBER
100753

DISH Wireless L.L.C.
PROJECT INFORMATION
BOBOS01058A
460 HILLSIDE AVENUE
NEEDHAM MA, 02494

SHEET TITLE
BUILDING PLAN

SHEET NUMBER
A-1

## NOTES

1. CONTRACTOR SHALL FIELD VERIFY ALL DIMENSIONS.

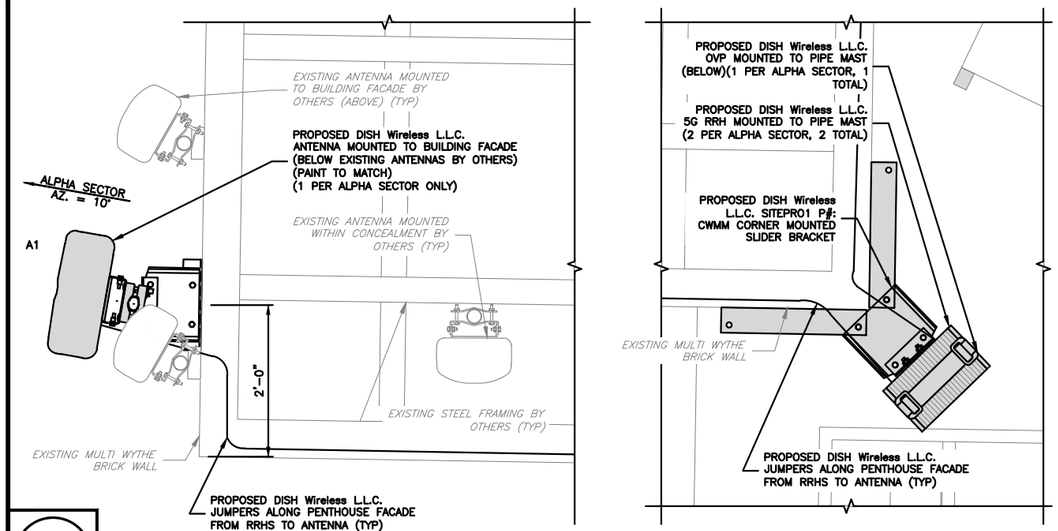


ALPHA SECTOR

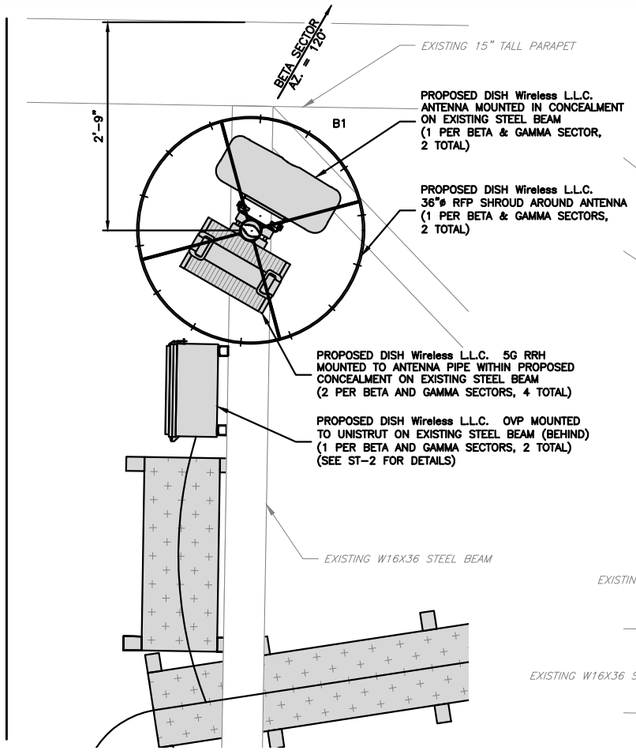


BETA SECTOR

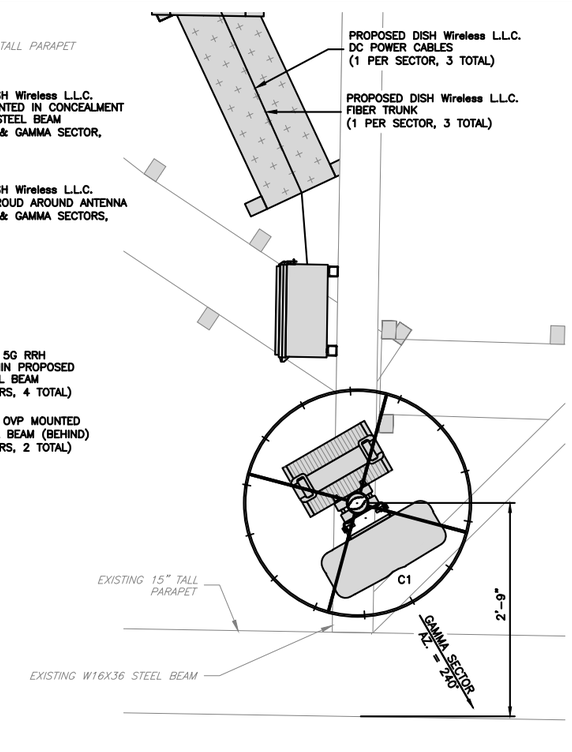


GAMMA SECTOR

ANTENNA PLANS

12" 6" 0 1' 2' 3' 4' 5' 6' 7'
3/8"=1'-0"

1

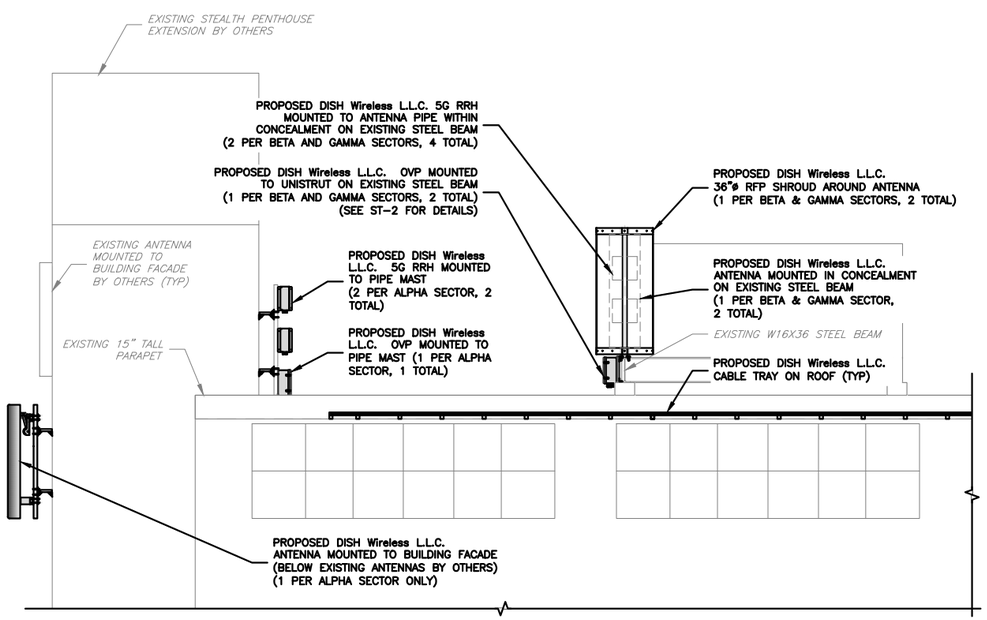


ANTENNA ELEVATION

12" 6" 0 1' 2' 3' 4' 5'
1/2"=1'-0"

2

| SECTOR POS. | ANTENNA | | | | | TRANSMISSION CABLE | RRH | | | OVP |
|---|---|---|---|---|---|---|---|---|---|---|
| | EXISTING OR PROPOSED | MANUFACTURER – MODEL NUMBER | TECH | AZIMUTH | RAD CENTER | FEED LINE TYPE AND LENGTH | MANUFACTURER – MODEL NUMBER | TECH | POS. | MANUFACTURER MODEL |
| A1 | PROPOSED | COMMSCOPE – FFVV-65B-R2 | 5G | 10° | 37'-0" | (1) 6AWG DC POWER CABLE AND (1) FIBER TRUNK (180'± LONG) | SAMSUNG – MID BAND SFG-ARR3KM01DI_RF4451D-70A | 5G | A1 | RAYCAP RDIDC-3045-PF-48 |
| -- | -- | -- | -- | -- | -- | | SAMSUNG – LOW BAND SFG-ARR3J601DI_RF4450T-71A | 5G | A1 | |
| -- | -- | -- | -- | -- | -- | | -- | -- | -- | |
| B1 | PROPOSED | COMMSCOPE – FFVV-65B-R2 | 5G | 120° | 46'-0" | (1) 6AWG DC POWER CABLE AND (1) FIBER TRUNK (155'± LONG) | SAMSUNG – MID BAND SFG-ARR3KM01DI_RF4451D-70A | 5G | B1 | RAYCAP RDIDC-3045-PF-48 |
| -- | -- | -- | -- | -- | -- | | SAMSUNG – LOW BAND SFG-ARR3J601DI_RF4450T-71A | 5G | B1 | |
| -- | -- | -- | -- | -- | -- | | -- | -- | -- | |
| C1 | PROPOSED | COMMSCOPE – FFVV-65B-R2 | 5G | 240° | 46-0" | (1) 6AWG DC POWER CABLE AND (1) FIBER TRUNK (172'± LONG) | SAMSUNG – MID BAND SFG-ARR3KM01DI_RF4451D-70A | 5G | C1 | RAYCAP RDIDC-3045-PF-48 |
| -- | -- | -- | -- | -- | -- | | SAMSUNG – LOW BAND SFG-ARR3J601DI_RF4450T-71A | 5G | C1 | |
| -- | -- | -- | -- | -- | -- | | -- | -- | -- | |

NOTES

1. CONTRACTOR TO REFER TO FINAL CONSTRUCTION RFDS FOR ALL RF DETAILS.
2. ANTENNA AND RRH MODELS MAY CHANGE DUE TO EQUIPMENT AVAILABILITY. ALL EQUIPMENT CHANGES MUST BE APPROVED AND REMAIN IN COMPLIANCE WITH THE PROPOSED DESIGN AND STRUCTURAL ANALYSES.

ANTENNA SCHEDULE

NO SCALE

3


dish wireless.

5701 SOUTH SANTA FE DRIVE
LITTLETON, CO 80120

NB+C TOTALLY COMMITTED

NB+C ENGINEERING SERVICES, LLC.

100 APOLLO DRIVE
SUITE 303
CHELMSFORD, MA 01824
(978) 856-8308


COMMONWEALTH OF MASSACHUSETTS
KRUPAKAR KOLLEPARA
NO. 50019
REGISTERED PROFESSIONAL ENGINEER


IT IS A VIOLATION OF LAW FOR ANY PERSON, UNLESS THEY ARE ACTING UNDER THE DIRECTION OF A LICENSED PROFESSIONAL ENGINEER, TO ALTER THIS DOCUMENT.


| DRAWN BY: | CHECKED BY: | APPROVED BY: |
|---|---|---|
| CSG | NSB | DRG |

RFDS REV #: 1

CONSTRUCTION DOCUMENTS

SUBMITTALS

| REV | DATE | DESCRIPTION |
|---|---|---|
| 0 | 07/28/2023 | ISSUED FOR REVIEW |
| 1 | 08/30/2023 | BILL OF MATERIALS |

A&E PROJECT NUMBER

100753

DISH Wireless L.L.C.
PROJECT INFORMATION

BOBOS01058A

460 HILLSIDE AVENUE
NEEDHAM MA, 02494

SHEET TITLE

ANTENNA PLAN, ELEVATION AND SCHEDULE

SHEET NUMBER

A-2

## NOTES

1. CONTRACTOR SHALL FIELD VERIFY ALL DIMENSIONS.
2. CONTRACTOR SHALL MAINTAIN A 10'-0" MINIMUM SEPARATION BETWEEN THE PROPOSED GPS UNIT, TRANSMITTING ANTENNAS AND EXISTING GPS UNITS.

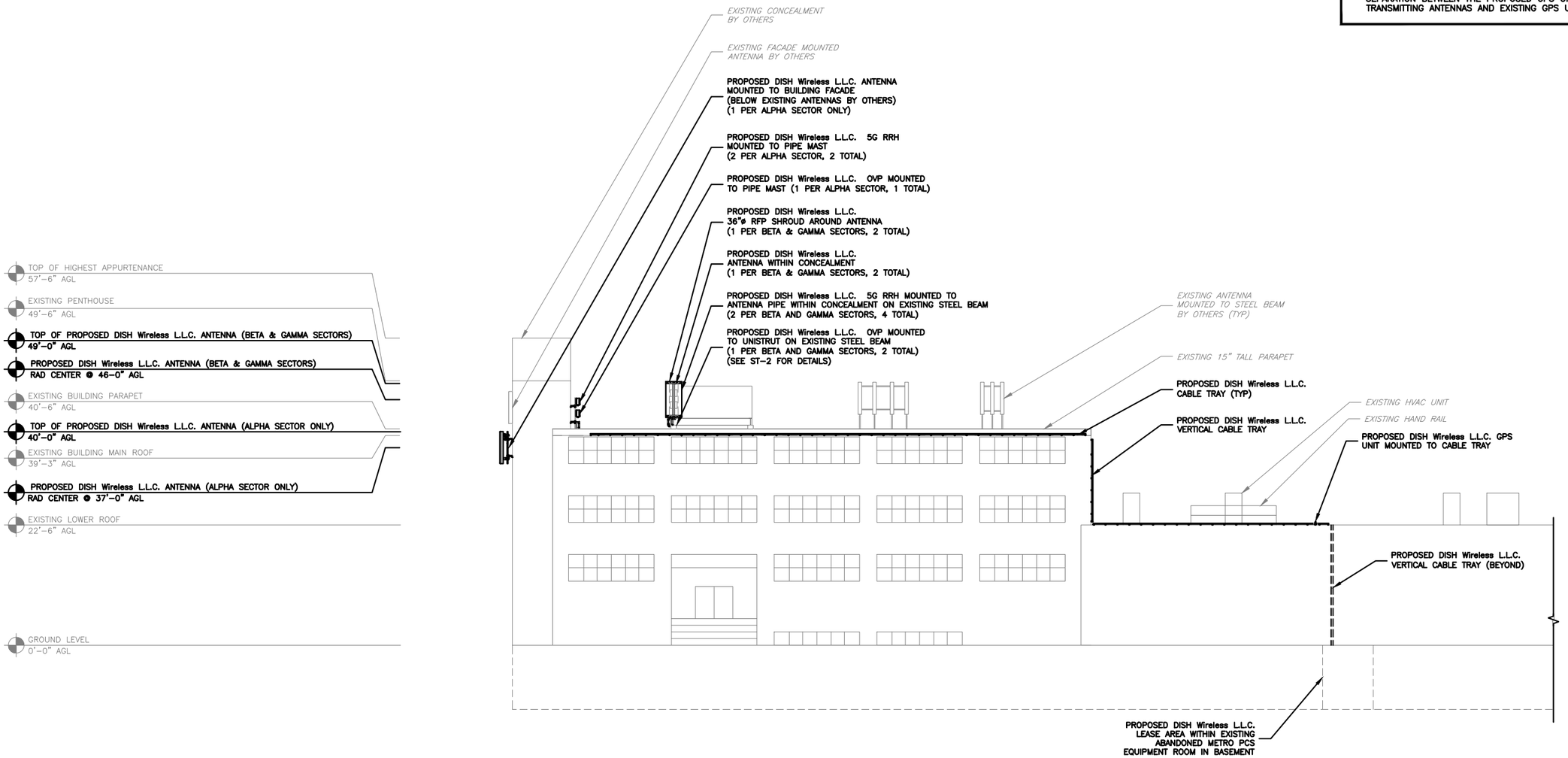


BUILDING ELEVATION

12' 8' 4' 0 10' 20'
3/32"=1'-0"

1

dish wireless.

5701 SOUTH SANTA FE DRIVE
LITTLETON, CO 80120

NB+C TOTALLY COMMITTED


NB+C ENGINEERING SERVICES, LLC.

100 APOLLO DRIVE
SUITE 303
CHELMSFORD, MA 01824
(978) 856-8308


COMMONWEALTH OF MASSACHUSETTS
KRUPAKAR KOLLAMPALLI
NO. 50019
REGISTERED PROFESSIONAL ENGINEER


IT IS A VIOLATION OF LAW FOR ANY PERSON, UNLESS THEY ARE ACTING UNDER THE DIRECTION OF A LICENSED PROFESSIONAL ENGINEER, TO ALTER THIS DOCUMENT.


| DRAWN BY: | CHECKED BY: | APPROVED BY: |
|---|---|---|
| CSG | NSB | DRG |

RFDS REV #: 1

CONSTRUCTION DOCUMENTS

SUBMITTALS

| REV | DATE | DESCRIPTION |
|---|---|---|
| 0 | 07/28/2023 | ISSUED FOR REVIEW |
| 1 | 08/30/2023 | BILL OF MATERIALS |

A&E PROJECT NUMBER
100753

DISH Wireless L.L.C.
PROJECT INFORMATION

BOBOS01058A

460 HILLSIDE AVENUE
NEEDHAM MA, 02494

SHEET TITLE
BUILDING ELEVATION

SHEET NUMBER
A-3

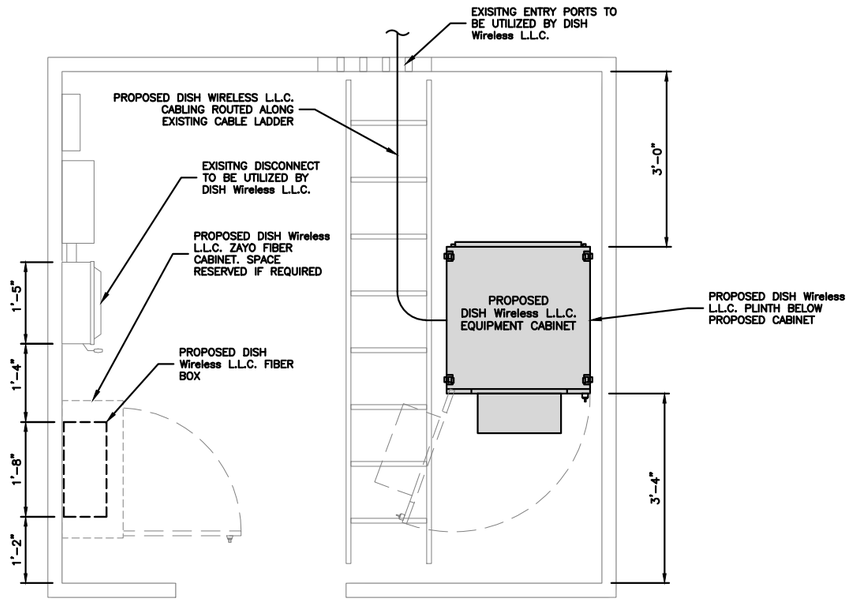


EQUIPMENT PLAN

12" 6" 0 1' 2' 3'
3/4"=1'-0"

1

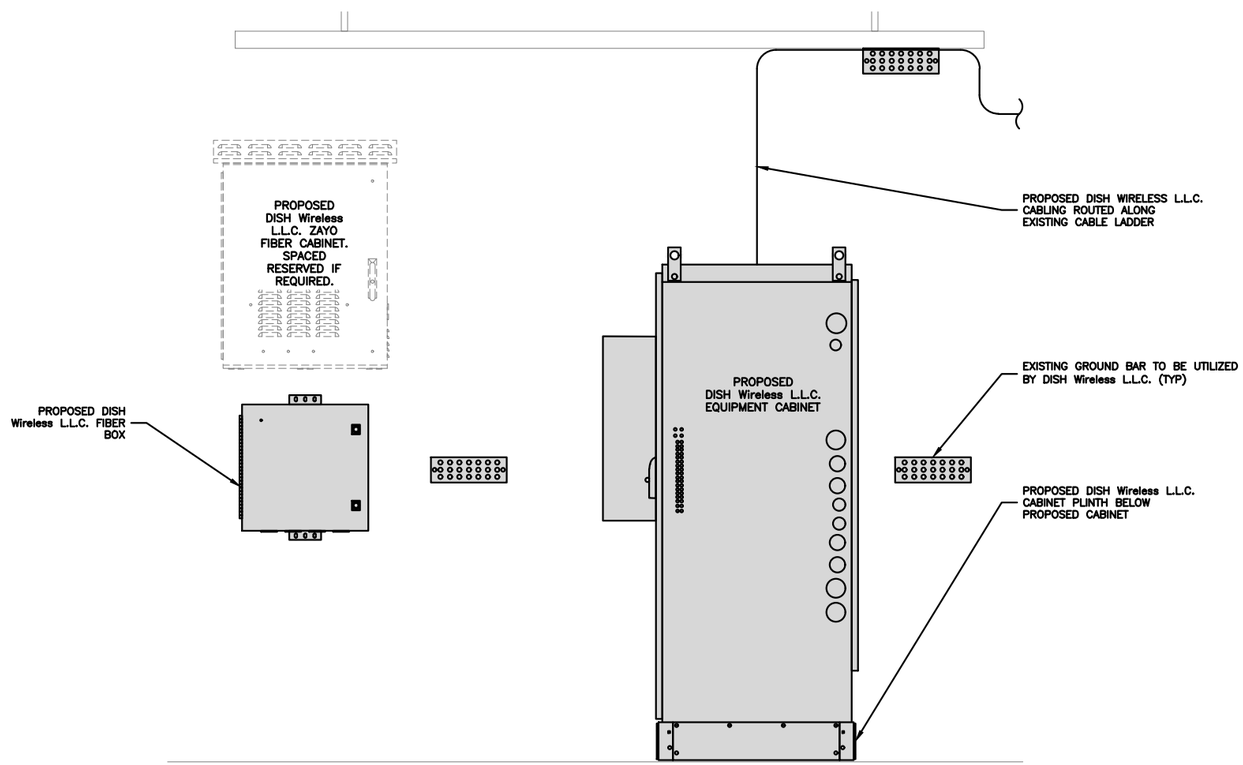


EQUIPMENT ELEVATION

12" 9" 6" 3" 0 1' 2'
1"=1'-0"

3

dish wireless.

5701 SOUTH SANTA FE DRIVE
LITTLETON, CO 80120

NB+C TOTALLY COMMITTED

NB+C ENGINEERING SERVICES, LLC.

100 APOLLO DRIVE
SUITE 303
CHELMSFORD, MA 01824
(978) 856-8308

COMMONWEALTH OF MASSACHUSETTS
KRUPAKAR KOLLAPAVEL
NO. 50019
REGISTERED PROFESSIONAL ENGINEER

IT IS A VIOLATION OF LAW FOR ANY PERSON, UNLESS THEY ARE ACTING UNDER THE DIRECTION OF A LICENSED PROFESSIONAL ENGINEER, TO ALTER THIS DOCUMENT.

| DRAWN BY: | CHECKED BY: | APPROVED BY: |
|---|---|---|
| CSG | NSB | DRG |

RFDS REV #: 1

CONSTRUCTION DOCUMENTS

SUBMITTALS

| REV | DATE | DESCRIPTION |
|---|---|---|
| 0 | 07/28/2023 | ISSUED FOR REVIEW |
| 1 | 08/30/2023 | BILL OF MATERIALS |

A&E PROJECT NUMBER

100753

DISH Wireless L.L.C.
PROJECT INFORMATION

BOBOS01058A

460 HILLSIDE AVENUE
NEEDHAM MA, 02494

SHEET TITLE

EQUIPMENT PLATFORM AND H-FRAME DETAILS

SHEET NUMBER

A-4

## ENERSYS HVAC 2000005995

| | |
|---|---|
| DIMENSIONS (HxWxD) | 73"x30"x32" |
| POWER SYSTEM | -48V ALPHA/600A |
| HVAC | 600W |
| TOTAL WEIGHT (EMPTY) | 371 lbs |

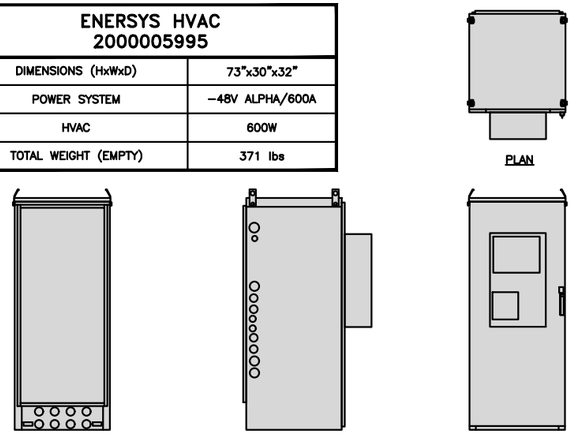


**CABINET DETAIL** — NO SCALE — 1

## CHARLES CFIT-PF2020DSH1 FIBER TELCO ENCLOSURE

| | |
|---|---|
| ENCLOSURE DIMS (HxWxD) | 20"x20"x9" |
| ENCLOSURE WEIGHT | 20 lbs |
| MOUNTING | WALL |
| COMPLIANCE | TYPE 4 |

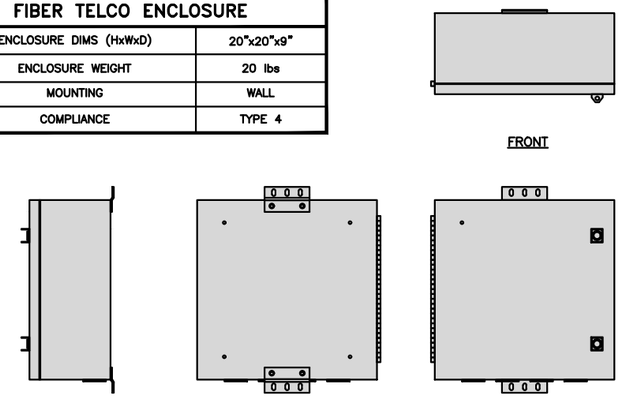


**FIBER TELCO ENCLOSURE DETAIL** — NO SCALE — 2

## CABLE WALL MOUNT SUPPORT

| | |
|---|---|
| UNISTRUT TYPE | GRAINGER P1000T |
| UNISTRUT DIMENSIONS (HxWxL) | 1 5/8"x 1 5/8"x 12" |
| WEIGHT/ VOLUME | 1.85 LB PER FOOT |
| ULTIMATE LOAD CAPACITY | 718.5 LB |

NOTES:
1. ALL HARDWARE AND PARTS SHALL BE HOT DIPPED GALVANIZED WITH LOCK WASHERS AND HEAVY HEX NUTS.
2. VERTICAL CABLE MOUNT: 4'-0" MAX. UNISTRUT SEPARATION
3. HORIZONTAL CABLE MOUNT: 3'-0" MAX UNISTRUT SEPARATION

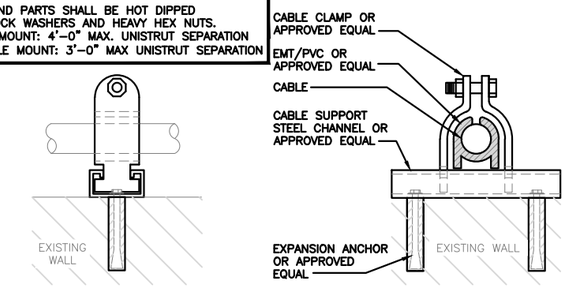


**CABLE WALL MOUNT SUPPORT DETAIL** — NO SCALE — 3

## LEVITON 1N240-21 SUBMETER

| | |
|---|---|
| WATTAGE | 3 |
| AMPS | 200 |
| VOLTS AC | 120, 208, 240 |
| PHASE | 1 |

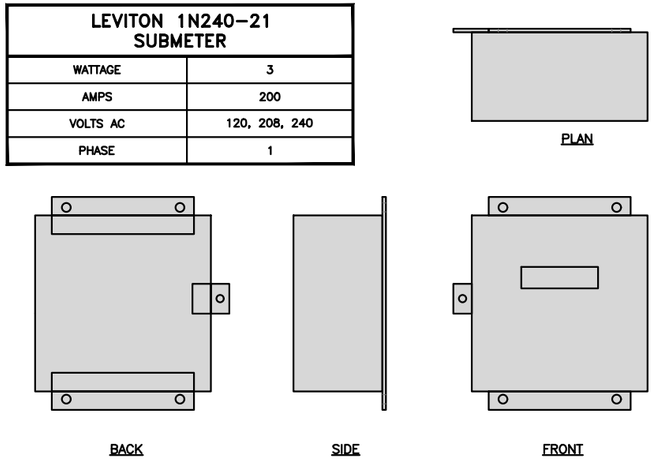


**E-MON D-MON DETAIL** — NO SCALE — 4

## PCTEL GPSGL-TMG-SPI-40NCB

| | |
|---|---|
| DIMENSIONS (DIAxH) MM/INCH | 81x184mm 3.2"x7.25" |
| WEIGHT W/ACCESSORIES | 075 lbs |
| CONNECTOR | N-FEMALE |
| FREQUENCY RANGE | 1590 ± 30MHz |

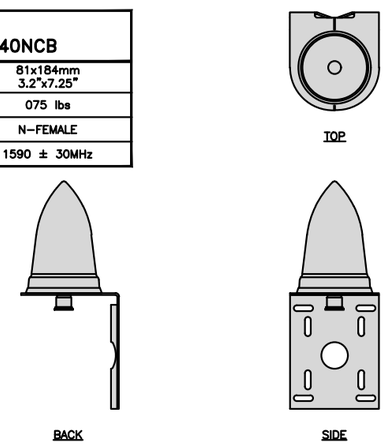


**GPS DETAIL** — NO SCALE — 5

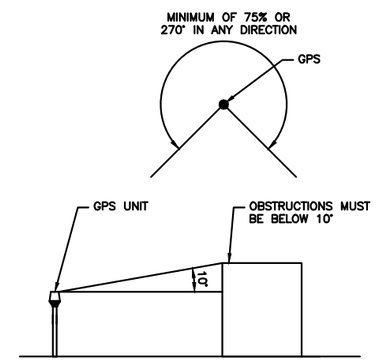


**GPS MINIMUM SKY VIEW REQUIREMENTS** — NO SCALE — 6

## COMMSCOPE COAX WALL SUPPORT MT-F1589

| | |
|---|---|
| WALL MOUNT BRACKET (4 RUNS OF COAX) | QTY: 2 |
| WALL COAX COVER FOR 4 RUNS | QTY: 1 |
| HARDWARE KIT | QTY: 1 |
| TOTAL WEIGHT | 67.71 lbs |

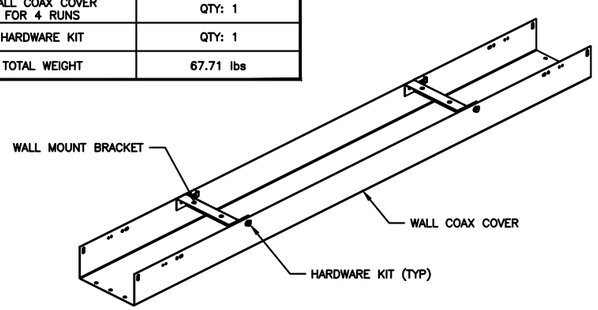


**CABLE WALL SUPPORT** — NO SCALE — 7

## SITEPRO1 SBWM SLIDER BRACKET WALL MOUNTS

| | |
|---|---|
| DIMENSIONS (WxD) | 14.5" x 10.5" |
| WEIGHT | 53.48 LB |
| ANTENNA PIPE SIZE | 2-3/8" O.D. |

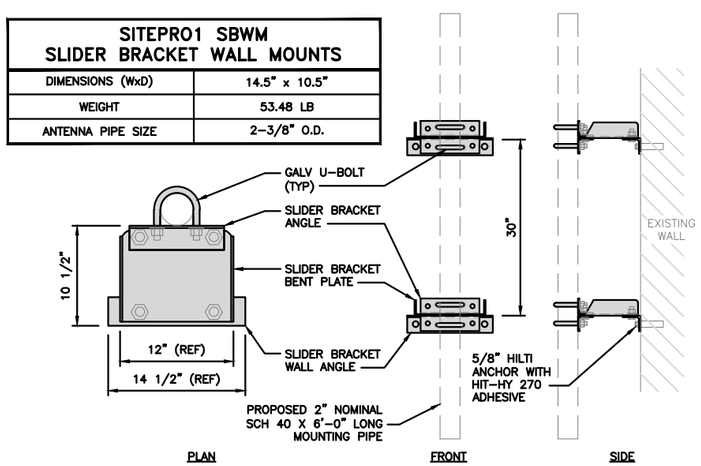


**ANTENNA WALL MOUNT DETAIL** — NO SCALE — 8

## COMMSCOPE RT-CB4D ROOFTOP COVER KIT

| | |
|---|---|
| DIMENSIONS (HxWxL) | 7"x 11.25"x 96" |
| WEIGHT/ VOLUME | 85.98 LBS |
| CABLE RUN (QTY) | 4 |

| | |
|---|---|
| MOUNTING | NON-PENETRATING |
| INCLUDED PRODUCTS: | RTCB4D.01 CHANNEL (1) |
| | MT-F1598 SLEEPERS (3) |
| | RTCUH HARDWARE |
| | RTHC.01 HOLD-DOWN CLAMPS (6) |

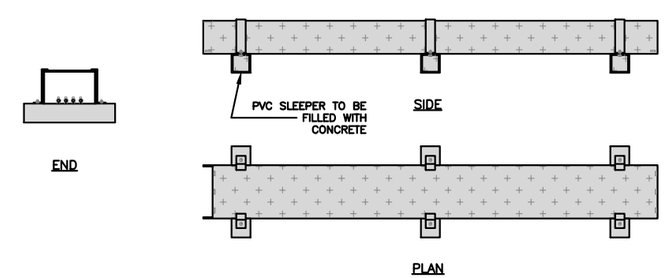


**ROOFTOP CABLE TRAY DETAIL** — NO SCALE — 9


dish wireless.
5701 SOUTH SANTA FE DRIVE
LITTLETON, CO 80120

NB+C TOTALLY COMMITTED
NB+C ENGINEERING SERVICES, LLC.
100 APOLLO DRIVE
SUITE 303
CHELMSFORD, MA 01824
(978) 856-8308


COMMONWEALTH OF MASSACHUSETTS — KRUPAKAR KOLLAMPARAMBIL — NO. 50019 — REGISTERED PROFESSIONAL ENGINEER


IT IS A VIOLATION OF LAW FOR ANY PERSON, UNLESS THEY ARE ACTING UNDER THE DIRECTION OF A LICENSED PROFESSIONAL ENGINEER, TO ALTER THIS DOCUMENT.


| DRAWN BY: | CHECKED BY: | APPROVED BY: |
|---|---|---|
| CSG | NSB | DRG |

RFDS REV #: 1

CONSTRUCTION DOCUMENTS

SUBMITTALS

| REV | DATE | DESCRIPTION |
|---|---|---|
| 0 | 07/28/2023 | ISSUED FOR REVIEW |
| 1 | 08/30/2023 | BILL OF MATERIALS |

A&E PROJECT NUMBER
100753

DISH Wireless L.L.C. PROJECT INFORMATION
BOBOS01058A
460 HILLSIDE AVENUE
NEEDHAM MA, 02494

SHEET TITLE
EQUIPMENT DETAILS

SHEET NUMBER
A-5

| SAMSUNG – MID BAND SFG–ARR3KM01DI_RF4451D–70A | |
|---|---|
| DIMENSIONS (HxWxD) | 15"x15"x8.9" |
| WEIGHT | 61.3 lbs |
| CONNECTOR TYPE | 4.3–10 RF CONNECTOR |
| INPUT VOLTAGE | –48VDC (–36 to 58 VDC) |

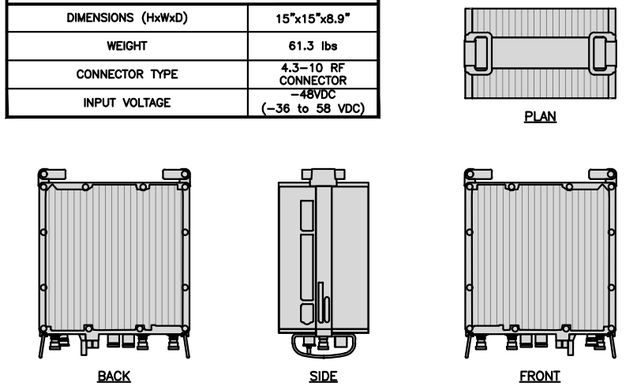


RRH DETAIL | NO SCALE | 1

| SAMSUNG – LOW BAND SFG–ARR3J601DI_RF4450T–71A | |
|---|---|
| DIMENSIONS (HxWxD) | 15"x16.5"x11" |
| WEIGHT | 94.6 lbs |
| CONNECTOR TYPE | 4.3–10 RF CONNECTOR |
| INPUT VOLTAGE | –48VDC (–36 to 58 VDC) |

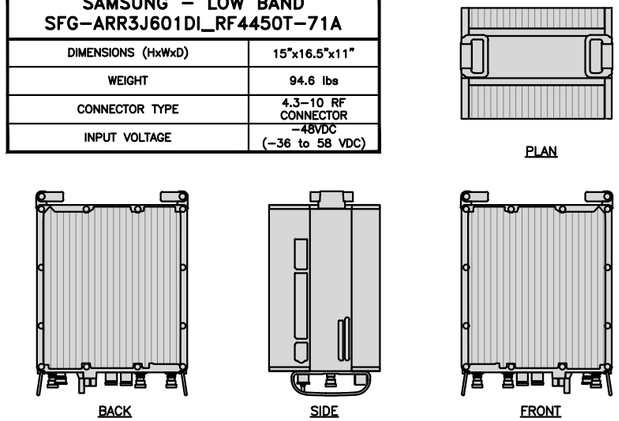


RRH DETAIL | NO SCALE | 2

| RAYCAP RDIDC–3045–PF–48 SURGE PROTECTION DEVICE (OVP) | |
|---|---|
| DIMENSIONS (HxWxD) | 19.00"x16.21"x9.64" |
| WEIGHT | 21 lbs |

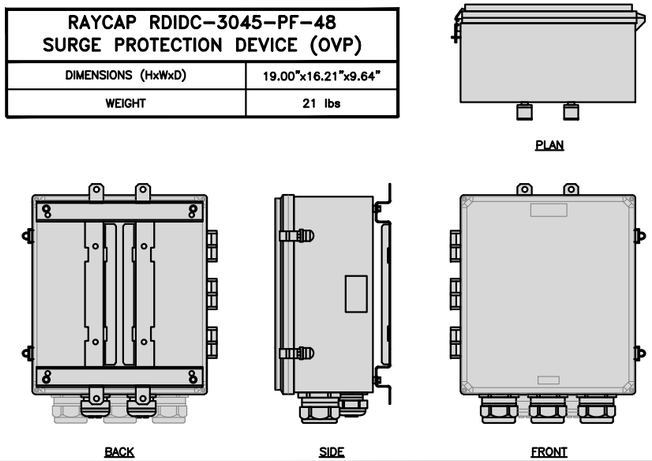


SURGE PROTECTION DEVICE DETAIL (OVP) | NO SCALE | 3

| RAYCAP RDIDC–3045–PF–48 SURGE PROTECTION DEVICE (OVP) | |
|---|---|
| DIMENSIONS (HxWxD) | 19.00"x16.21"x9.64" |
| WEIGHT | 21 lbs |

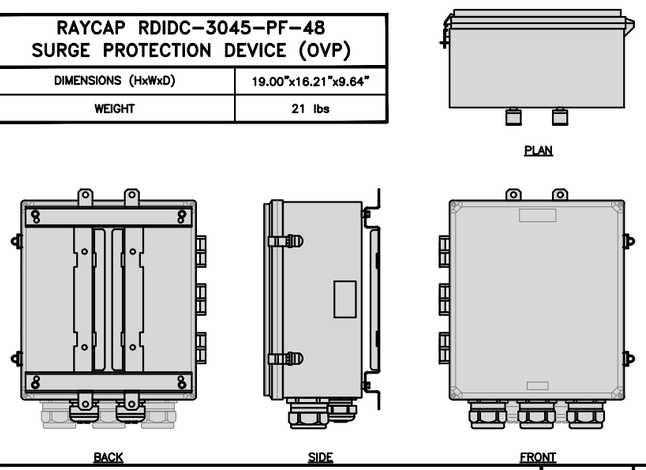


SURGE PROTECTION DEVICE DETAIL (OVP) | NO SCALE | 4

| COMMSCOPE FFVV–65B–R2 | |
|---|---|
| DIMENSIONS (HxWxD)(MM/IN) | 1828x498x197 72"x19.6"x7.8" |
| RF CONNECTOR INTERFACE | 4.3–10 FEMALE |
| WEIGHT | 70.8 lbs |
| WEIGHT WITH BRACKETS | 98.1 lbs |

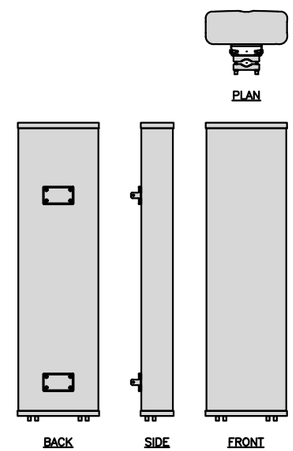


ANTENNA DETAIL | NO SCALE | 5

| M04 MOUNTING BRACKET HPA–33R–BUU–H4–K | |
|---|---|
| WIDTH | 5" (135mm) |
| DEPTH | 2" (51mm) |
| HEIGHT | 8" (213mm) |
| TOTAL WEIGHT (WITH BRACKETS) | 1.5 LBS (15.50 Kg) |
| HOUSING MATERIAL | ASA/ABS/ALUMINUM |
| RADOME COLOR | LIGHT GRAY |
| CONNECTOR | 1X8–PIN DAISY CHAIN |

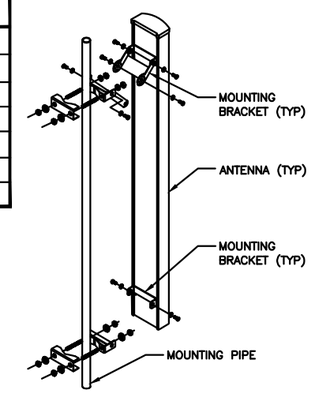


ANTENNA DOWNTILT MOUNTING DETAIL | NO SCALE | 6

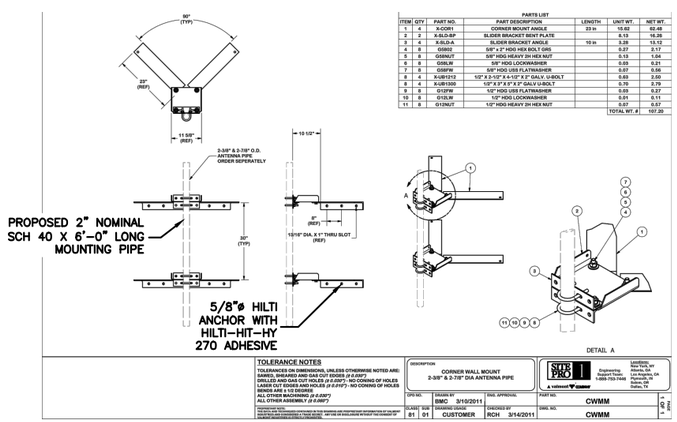


PARTS LIST

| ITEM | QTY | PART NO. | PART DESCRIPTION | LENGTH | UNIT WT. | NET WT. |
|---|---|---|---|---|---|---|
| 1 | 4 | X-CORI | CORNER MOUNT ANGLE | 23 in | 10.62 | 62.48 |
| 2 | 2 | X-SLD-B/P | SLIDER BRACKET BENT PLATE | | 8.13 | 16.26 |
| 3 | 4 | S-SLD-A | SLIDER BRACKET ANGLE | 10 in | 3.28 | 13.12 |
| 4 | 8 | G5BS2 | 5/8" x 2" HDG HEX BOLT GR5 | | 0.27 | 2.17 |
| 5 | 8 | G5BNUT | 5/8" HDG HEAVY 2H HEX NUT | | 0.13 | 1.04 |
| 6 | 8 | G5SLW | 5/8" HDG LOCKWASHER | | 0.03 | 0.21 |
| 7 | 8 | G5FW | 5/8" HDG USS FLATWASHER | | 0.07 | 0.56 |
| 8 | 4 | X-UB12/12 | 1/2" X 5" OPEN END FLATBACK U-BOLT | | 0.60 | 2.39 |
| 9 | 4 | X-UB12/9 | 1/2" X 3" X 5" X 5" DALU U-BOLT | | 0.69 | 2.76 |
| 10 | 8 | G12FW | 1/2" HDG USS FLATWASHER | | 0.05 | 0.37 |
| 10 | 8 | G12LW | 1/2" HDG LOCKWASHER | | 0.01 | 0.11 |
| 11 | 8 | G12NUT | 1/2" HDG HEAVY 2H HEX NUT | | 0.07 | 0.57 |
| | | | | | TOTAL WT. # | 107.20 |

TOLERANCE NOTES

TOLERANCES ON DIMENSIONS, UNLESS OTHERWISE NOTED ARE: SAWED, SHEARED AND GAS CUT EDGES (0.5.030") DRILLED AND GAS CUT HOLES (0.0.030") - NO CORING OF HOLES LASER CUT EDGES AND HOLES (0.0.010") - NO CORING OF HOLES ALL BENDS (0.0.030") ALL OTHER MACHINING (0.0.030") ALL OTHER ASSEMBLY (0.0.060")

DESCRIPTION: CORNER WALL MOUNT 2-3/8" & 2-7/8" DIA ANTENNA PIPE

SITE PRO 1 — A VERMEER COMPANY — Engineering: Rudolph Tonio 1-855-753-7446 — LOCATIONS: New York, NY / Dallas, TX / Los Angeles, CA / Phoenix, AZ / Dallas, GA / Dallas, TX

| DWG NO. | DRAWN BY | ENG. APPROVAL | PART NO. | QTY |
|---|---|---|---|---|
| | SMC 3/10/2011 | | CWMM | 4 |

| CLASS | SUB | DESIGNED COMPANY | CHECKED BY | DWG. NO. |
|---|---|---|---|---|
| 01 | 01 | CUSTOMER | RCH 3/14/2011 | CWMM |

CWMM DETAIL | NO SCALE | 7

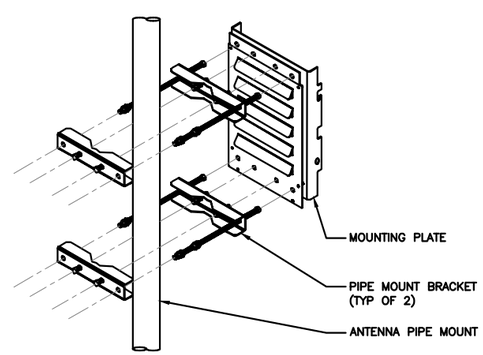


REMOTE RADIO MOUNT DETAIL | NO SCALE | 8

| ENERSYS CABINET 6" PLINTH – 2000006059 | |
|---|---|
| DIMENSIONS (HxWxD) | 6"x30"x30" |
| WEIGHT | TBD |

NOTE: GASKET AND MOUNTING HARDWARE INCLUDED

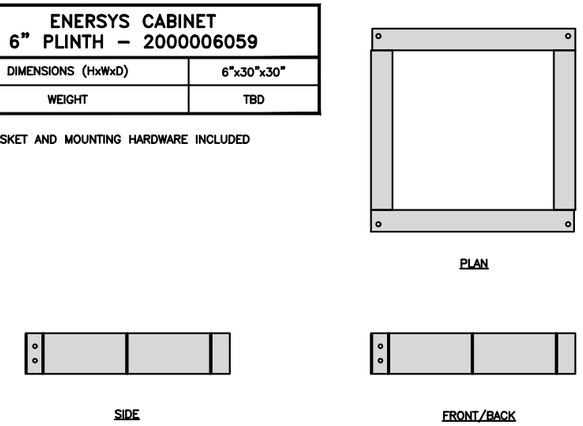


CABINET PLINTH DETAIL | NO SCALE | 9


dish wireless.

5701 SOUTH SANTA FE DRIVE
LITTLETON, CO 80120

NB+C TOTALLY COMMITTED

NB+C ENGINEERING SERVICES, LLC.

100 APOLLO DRIVE
SUITE 303
CHELMSFORD, MA 01824
(978) 856-8308


COMMONWEALTH OF MASSACHUSETTS — KRUPAKAR KOLLEPARA — NO. 35019 — REGISTERED PROFESSIONAL ENGINEER


IT IS A VIOLATION OF LAW FOR ANY PERSON, UNLESS THEY ARE ACTING UNDER THE DIRECTION OF A LICENSED PROFESSIONAL ENGINEER, TO ALTER THIS DOCUMENT.


| DRAWN BY: | CHECKED BY: | APPROVED BY: |
|---|---|---|
| CSG | NSB | DRG |

RFDS REV #: 1

CONSTRUCTION DOCUMENTS

SUBMITTALS

| REV | DATE | DESCRIPTION |
|---|---|---|
| 0 | 07/28/2023 | ISSUED FOR REVIEW |
| 1 | 08/30/2023 | BILL OF MATERIALS |

A&E PROJECT NUMBER
100753

DISH Wireless L.L.C.
PROJECT INFORMATION
BOBOS01058A
460 HILLSIDE AVENUE
NEEDHAM MA, 02494

SHEET TITLE
EQUIPMENT DETAILS

SHEET NUMBER
A-6

## NOTE

1. CONTRACTOR SHALL FIELD VERIFY ALL DIMENSIONS.
2. UTILIZE EXISTING ABANDONED METROPCS CONDUITS WHERE AVAILABLE. REPLACE/INSTALL NEW CONDUIT SECTIONS AS NEEDED.
3. CONTRACTOR TO VERIFY WITH DISH Wireless L.L.C. C.M. THE LOCATION OF THE POWER AND FIBER SOURCE PRIOR TO CONSTRUCTION.

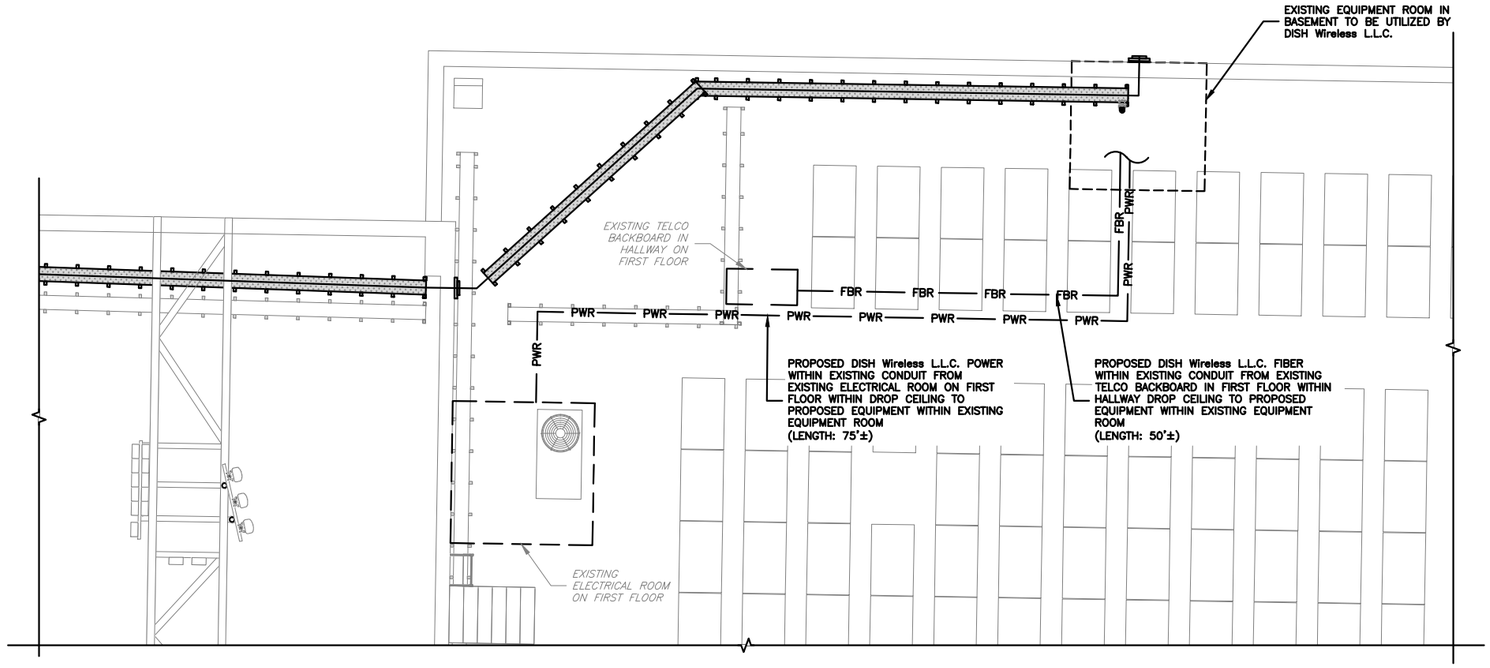


## UTILITY ROUTE PLAN

12' 8' 4' 0 10' 20'
3/32"=1'-0"

1

## NOTES

1. CONTRACTOR SHALL FIELD VERIFY ALL DIMENSIONS.
2. EXISTING METER AND DISCONNECT LOCATED IN THE ELECTRICAL ROOM IN THE BASEMENT. WILL NEED BUILDING MAINTENANCE FOR ROOM ACCESS

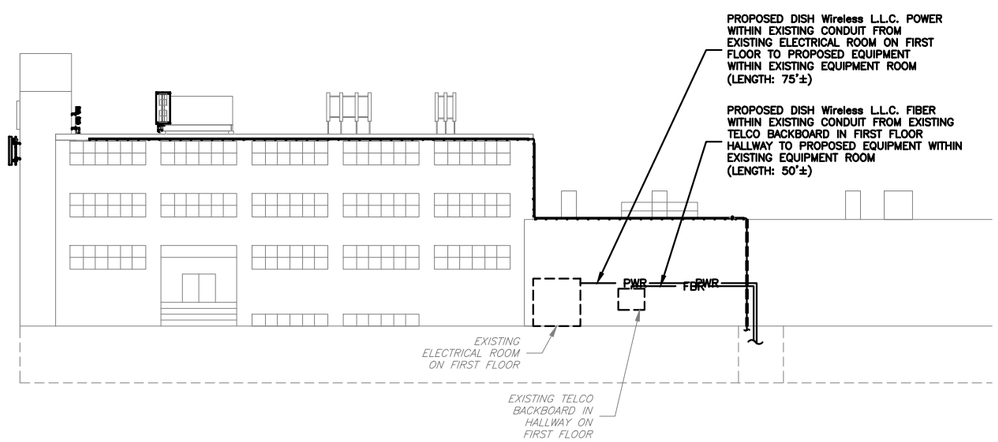


## UTILITY ROUTE ELEVATION

16' 12' 8' 4' 0 16' 32'
1/16"=1'-0"

2

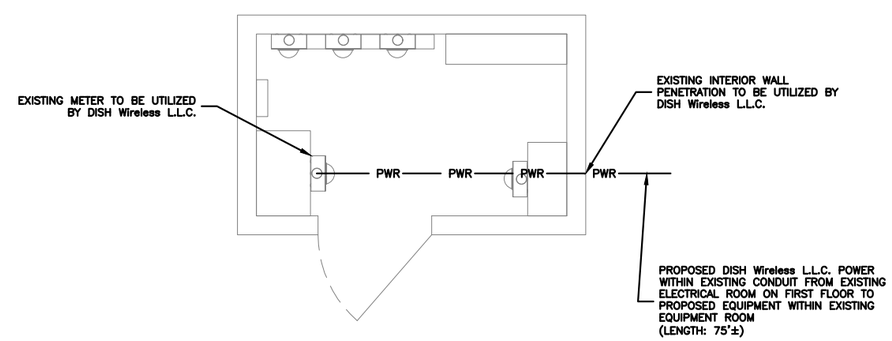


## ELECTRICAL ROOM PLAN

12" 6" 0 1' 2' 3' 4' 5'
1/2"=1'-0"

3

dish wireless.

5701 SOUTH SANTA FE DRIVE
LITTLETON, CO 80120

NB+C TOTALLY COMMITTED


NB+C ENGINEERING SERVICES, LLC.

100 APOLLO DRIVE
SUITE 303
CHELMSFORD, MA 01824
(978) 856-8308


COMMONWEALTH OF MASSACHUSETTS
KRUPAKAR KOLLIPARA
NO. 30019
REGISTERED PROFESSIONAL ENGINEER


IT IS A VIOLATION OF LAW FOR ANY PERSON, UNLESS THEY ARE ACTING UNDER THE DIRECTION OF A LICENSED PROFESSIONAL ENGINEER, TO ALTER THIS DOCUMENT.


| DRAWN BY: | CHECKED BY: | APPROVED BY: |
|---|---|---|
| CSG | NSB | DRG |

RFDS REV #: 1

CONSTRUCTION DOCUMENTS

SUBMITTALS

| REV | DATE | DESCRIPTION |
|---|---|---|
| 0 | 07/28/2023 | ISSUED FOR REVIEW |
| 1 | 08/30/2023 | BILL OF MATERIALS |

A&E PROJECT NUMBER

100753

DISH Wireless L.L.C.
PROJECT INFORMATION

BOBOS01058A

460 HILLSIDE AVENUE
NEEDHAM MA, 02494

SHEET TITLE

ELECTRICAL/FIBER ROUTE PLAN AND NOTES

SHEET NUMBER

E-1

DC POWER WIRING SHALL BE COLOR CODED AT EACH END FOR IDENTIFYING +24V AND −48V CONDUCTORS. RED MARKINGS SHALL IDENTIFY +24V AND BLUE MARKINGS SHALL IDENTIFY −48V.

1. CONTRACTOR SHALL INSPECT THE EXISTING CONDITIONS PRIOR TO SUBMITTING A BID. ANY QUESTIONS ARISING DURING THE BID PERIOD IN REGARDS TO THE CONTRACTOR'S FUNCTIONS, THE SCOPE OF WORK, OR ANY OTHER ISSUE RELATED TO THIS PROJECT SHALL BE BROUGHT UP DURING THE BID PERIOD WITH THE PROJECT MANAGER FOR CLARIFICATION, NOT AFTER THE CONTRACT HAS BEEN AWARDED.
2. ALL ELECTRICAL WORK SHALL BE DONE IN ACCORDANCE WITH CURRENT NATIONAL ELECTRICAL CODES AND ALL STATE AND LOCAL CODES, LAWS, AND ORDINANCES. PROVIDE ALL COMPONENTS AND WIRING SIZES AS REQUIRED TO MEET NEC STANDARDS.
3. LOCATION OF EQUIPMENT, CONDUIT AND DEVICES SHOWN ON THE DRAWINGS ARE APPROXIMATE AND SHALL BE COORDINATED WITH FIELD CONDITIONS PRIOR TO CONSTRUCTION.
4. CONDUIT ROUGH−IN SHALL BE COORDINATED WITH THE MECHANICAL EQUIPMENT TO AVOID LOCATION CONFLICTS. VERIFY WITH THE MECHANICAL EQUIPMENT CONTRACTOR AND COMPLY AS REQUIRED.
5. CONTRACTOR SHALL PROVIDE ALL BREAKERS, CONDUITS AND CIRCUITS AS REQUIRED FOR A COMPLETE SYSTEM.
6. CONTRACTOR SHALL PROVIDE PULL BOXES AND JUNCTION BOXES AS REQUIRED BY THE NEC ARTICLE 314.
7. CONTRACTOR SHALL PROVIDE ALL STRAIN RELIEF AND CABLE SUPPORTS FOR ALL CABLE ASSEMBLIES. INSTALLATION SHALL BE IN ACCORDANCE WITH MANUFACTURER'S SPECIFICATIONS AND RECOMMENDATIONS.
8. ALL DISCONNECTS AND CONTROLLING DEVICES SHALL BE PROVIDED WITH ENGRAVED PHENOLIC NAMEPLATES INDICATING EQUIPMENT CONTROLLED, BRANCH CIRCUITS INSTALLED ON, AND PANEL FIELD LOCATIONS FED FROM.
9. INSTALL AN EQUIPMENT GROUNDING CONDUCTOR IN ALL CONDUITS PER THE SPECIFICATIONS AND NEC 250. THE EQUIPMENT GROUNDING CONDUCTORS SHALL BE BONDED AT ALL JUNCTION BOXES, PULL BOXES, AND ALL DISCONNECT SWITCHES, AND EQUIPMENT CABINETS.
10. ALL NEW MATERIAL SHALL HAVE A U.L. LABEL.
11. PANEL SCHEDULE LOADING AND CIRCUIT ARRANGEMENTS REFLECT POST−CONSTRUCTION EQUIPMENT.
12. CONTRACTOR SHALL BE RESPONSIBLE FOR AS−BUILT PANEL SCHEDULE AND SITE DRAWINGS.

ELECTRICAL NOTES | NO SCALE | 1

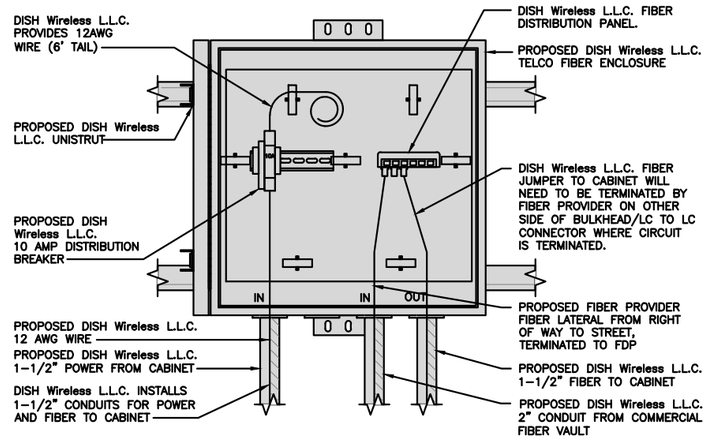


DARK TELCO BOX − INTERIOR WIRING LAYOUT | NO SCALE | 2

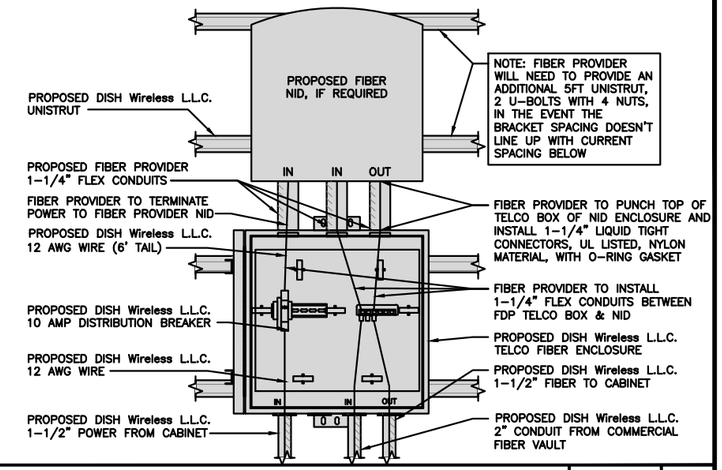


LIT TELCO BOX − INTERIOR WIRING LAYOUT (OPTIONAL) | NO SCALE | 3

NOT USED | NO SCALE | 4

NOT USED | NO SCALE | 5

NOT USED | NO SCALE | 6

NOT USED | NO SCALE | 7

NOT USED | NO SCALE | 8


dish wireless.

5701 SOUTH SANTA FE DRIVE
LITTLETON, CO 80120

NB+C TOTALLY COMMITTED

NB+C ENGINEERING SERVICES, LLC.

100 APOLLO DRIVE
SUITE 303
CHELMSFORD, MA 01824
(978) 856-8308


COMMONWEALTH OF MASSACHUSETTS
KRUPAKAR KOLLAMPAVEL
NO. 50019
REGISTERED PROFESSIONAL ENGINEER


IT IS A VIOLATION OF LAW FOR ANY PERSON, UNLESS THEY ARE ACTING UNDER THE DIRECTION OF A LICENSED PROFESSIONAL ENGINEER, TO ALTER THIS DOCUMENT.


| DRAWN BY: | CHECKED BY: | APPROVED BY: |
|---|---|---|
| CSG | NSB | DRG |

RFDS REV #: 1

CONSTRUCTION DOCUMENTS

SUBMITTALS

| REV | DATE | DESCRIPTION |
|---|---|---|
| 0 | 07/28/2023 | ISSUED FOR REVIEW |
| 1 | 08/30/2023 | BILL OF MATERIALS |

A&E PROJECT NUMBER
100753

DISH Wireless L.L.C.
PROJECT INFORMATION
BOBOS01058A
460 HILLSIDE AVENUE
NEEDHAM MA, 02494

SHEET TITLE
ELECTRICAL DETAILS

SHEET NUMBER
E-2

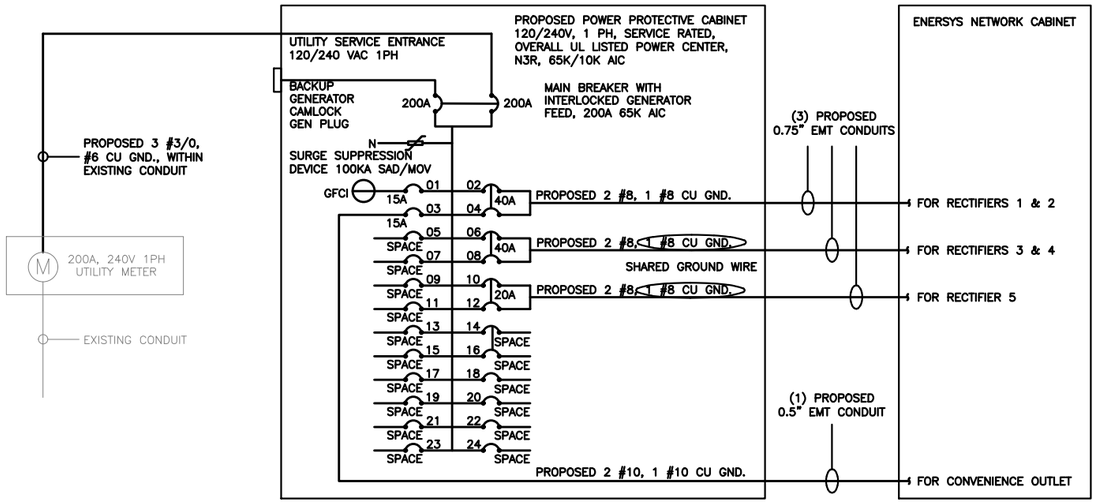


**NOTE:**
BRANCH CIRCUIT WIRING SUPPLYING RECTIFIERS ARE TO BE RATED UL1015, 105°C, 600V, AND PVC INSULATED, IN THE SIZES SHOWN IN THE ONE-LINE DIAGRAM. CONTRACTOR MAY SUBSTITUTE UL1015 WIRE FOR THWN-2 FOR CONVENIENCE OUTLET BRANCH CIRCUIT.

**BREAKERS REQUIRED:**
(2) 40A, 2P BREAKER – SQUARE D P/N:QO240
(1) 20A, 2P BREAKER – SQUARE D P/N:QO220
(1) 20A, 1P BREAKER – SQUARE D P/N:QO120

## NOTES

THE ENGINEER OF RECORD HAS PERFORMED ALL REQUIRED SHORT CIRCUIT CALCULATIONS AND THE AIC RATINGS FOR EACH DEVICE IS ADEQUATE TO PROTECT THE EQUIPMENT AND THE ELECTRICAL SYSTEM.

THE ENGINEER OF RECORD HAS PERFORMED ALL REQUIRED VOLTAGE DROP CALCULATIONS AND ALL BRANCH CIRCUIT AND FEEDERS COMPLY WITH THE NEC (LISTED ON T-1) ARTICLE 210.19(A)(1) FPN NO. 4.

CONDUIT SIZING: AT 40% FILL PER NEC CHAPTER 9, TABLE 4, ARTICLE 358.
0.5" CONDUIT – 0.122 SQ. IN AREA
0.75" CONDUIT – 0.213 SQ. IN AREA
2.0" CONDUIT – 1.316 SQ. IN AREA
3.0" CONDUIT – 2.907 SQ. IN AREA

CABINET CONVENIENCE OUTLET CONDUCTORS (1 CONDUIT): USING THWN-2, CU.

#10 – 0.0211 SQ. IN X 2 = 0.0422 SQ. IN
#10 – 0.0211 SQ. IN X 1 = 0.0211 SQ. IN <GROUND
TOTAL = 0.0633 SQ. IN

0.5" EMT CONDUIT IS ADEQUATE TO HANDLE THE TOTAL OF (3) WIRES, INCLUDING GROUND WIRE, AS INDICATED ABOVE.

RECTIFIER CONDUCTORS (3 CONDUITS): USING UL1015, CU.

#8 – 0.0552 SQ. IN X 2 = 0.1103 SQ. IN
#8 – 0.0131 SQ. IN X 1 = 0.0131 SQ. IN <BARE GROUND
TOTAL = 0.1234 SQ. IN

0.75" EMT CONDUIT IS ADEQUATE TO HANDLE THE TOTAL OF (3) WIRES, INCLUDING GROUND WIRE, AS INDICATED ABOVE.

PPC FEED CONDUCTORS (1 CONDUIT): USING THWN, CU.

3/0 – 0.2679 SQ. IN X 3 = 0.8037 SQ. IN
#6 – 0.0507 SQ. IN X 1 = 0.0507 SQ. IN <GROUND
TOTAL = 0.8544 SQ. IN

3.0" SCH 40 PVC CONDUIT IS ADEQUATE TO HANDLE THE TOTAL OF (4) WIRES, INCLUDING GROUND WIRE, AS INDICATED ABOVE.

## PPC ONE-LINE DIAGRAM

NO SCALE | 1

### PROPOSED ENERSYS PANEL SCHEDULE

| LOAD SERVED | VOLT AMPS (WATTS) L1 | VOLT AMPS (WATTS) L2 | TRIP | CKT # | PHASE | | CKT # | TRIP | VOLT AMPS (WATTS) L1 | VOLT AMPS (WATTS) L2 | LOAD SERVED |
|---|---|---|---|---|---|---|---|---|---|---|---|
| PPC GFCI OUTLET | 180 | | 15A | 1 | A | | 2 | 40A | 3840 | | ENERSYS ALPHA CORDEX |
| ENERSYS GFCI OUTLET | | 180 | 15A | 3 | B | | 4 | | | 3840 | RECTIFIERS 1 & 2 |
| –SPACE– | | | | 5 | A | | 6 | 40A | 3840 | | ENERSYS ALPHA CORDEX |
| –SPACE– | | | | 7 | B | | 8 | | | 3840 | RECTIFIER 3 & 4 |
| –SPACE– | | | | 9 | A | | 10 | 20A | 1920 | | ENERSYS ALPHA CORDEX |
| –SPACE– | | | | 11 | B | | 12 | | | 1920 | RECTIFIER 5 |
| –SPACE– | | | | 13 | A | | 14 | | | | –SPACE– |
| –SPACE– | | | | 15 | B | | 16 | | | | –SPACE– |
| –SPACE– | | | | 17 | A | | 18 | | | | –SPACE– |
| –SPACE– | | | | 19 | B | | 20 | | | | –SPACE– |
| –SPACE– | | | | 21 | A | | 22 | | | | –SPACE– |
| –SPACE– | | | | 23 | B | | 24 | | | | –SPACE– |
| VOLTAGE AMPS | 180 | 180 | | | | | | | 9500 | 9500 | |
| 200A MCB, 1ϕ, 24 SPACE, 120/240V | | | | L1 | | L2 | | | | | |
| MB RATING: 65,000 AIC | | | | 9680 | | 9680 | | VOLTAGE AMPS | | | |
| | | | | 81 | | 81 | | AMPS | | | |
| | | | | 81 | | | | MAX AMPS | | | |
| | | | | 102 | | | | MAX 125% | | | |

## PANEL SCHEDULE

NO SCALE | 2

## NOT USED

NO SCALE | 3


dish wireless.
5701 SOUTH SANTA FE DRIVE
LITTLETON, CO 80120

NB+C TOTALLY COMMITTED
NB+C ENGINEERING SERVICES, LLC.
100 APOLLO DRIVE
SUITE 303
CHELMSFORD, MA 01824
(978) 856-8308


COMMONWEALTH OF MASSACHUSETTS
KRUPAKAR KOLLAMPALLI
NO. 50019
REGISTERED PROFESSIONAL ENGINEER


IT IS A VIOLATION OF LAW FOR ANY PERSON, UNLESS THEY ARE ACTING UNDER THE DIRECTION OF A LICENSED PROFESSIONAL ENGINEER, TO ALTER THIS DOCUMENT.


| DRAWN BY: | CHECKED BY: | APPROVED BY: |
|---|---|---|
| CSG | NSB | DRG |

RFDS REV #: 1

CONSTRUCTION DOCUMENTS

SUBMITTALS

| REV | DATE | DESCRIPTION |
|---|---|---|
| 0 | 07/28/2023 | ISSUED FOR REVIEW |
| 1 | 08/30/2023 | BILL OF MATERIALS |

A&E PROJECT NUMBER
100753

DISH Wireless L.L.C.
PROJECT INFORMATION
BOBOS01058A
460 HILLSIDE AVENUE
NEEDHAM MA, 02494

SHEET TITLE
ELECTRICAL ONE-LINE & PANEL SCHEDULE

SHEET NUMBER
E-3

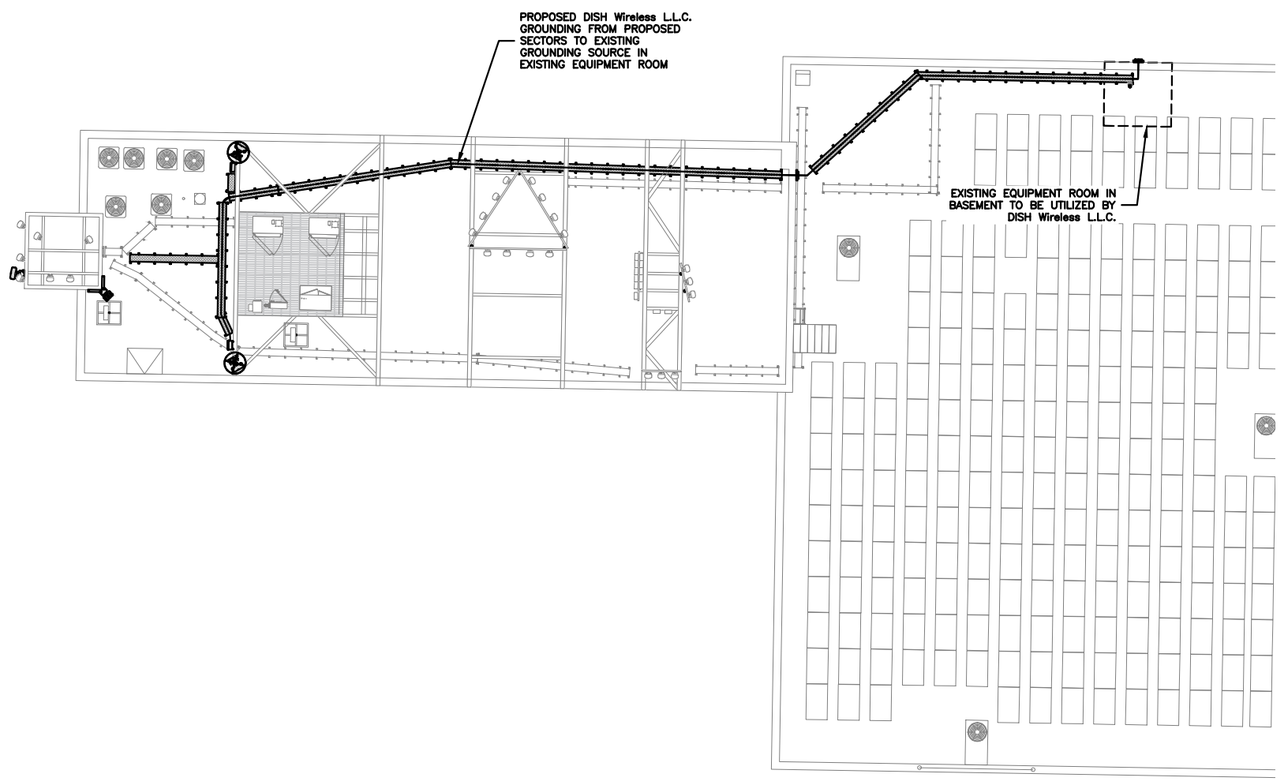


## GROUNDING PLAN

4' 2' 0 4' 8'
1/4"=1'-0"

1

- EXOTHERMIC CONNECTION
- MECHANICAL CONNECTION
- GROUND BUS BAR
- GROUND ROD
- TEST GROUND ROD WITH INSPECTION SLEEVE
- #6 AWG STRANDED & INSULATED
- #2 AWG SOLID COPPER TINNED
- BUSS BAR INSULATOR

## GROUNDING LEGEND

1. GROUNDING IS SHOWN DIAGRAMMATICALLY ONLY.
2. CONTRACTOR SHALL GROUND ALL EQUIPMENT AS A COMPLETE SYSTEM. GROUNDING SHALL BE IN COMPLIANCE WITH NEC SECTION 250 AND DISH Wireless L.L.C. GROUNDING AND BONDING REQUIREMENTS AND MANUFACTURER'S SPECIFICATIONS.
3. ALL GROUND CONDUCTORS SHALL BE COPPER; NO ALUMINUM CONDUCTORS SHALL BE USED.
4. NO EXOTHERMIC WELDING ON ROOFTOP

## GROUNDING ROOFTOP KEY NOTES

(A) EXTERIOR GROUND RING: #2 AWG SOLID COPPER, BURIED AT A DEPTH OF AT LEAST 30 INCHES BELOW GRADE, OR 6 INCHES BELOW THE FROST LINE AND APPROXIMATELY 24 INCHES FROM THE EXTERIOR WALL OR FOOTING.

(B) ROOFTOP GROUND SYSTEM: THE GROUND SYSTEM USING MINIMUM #2 AWG SOLID COPPER CONDUCTORS.

(C) INTERIOR GROUND RING: #2 AWG STRANDED GREEN INSULATED COPPER CONDUCTOR EXTENDED AROUND THE PERIMETER OF THE EQUIPMENT AREA. ALL NON–TELECOMMUNICATIONS RELATED METALLIC OBJECTS FOUND WITHIN A SITE SHALL BE GROUNDED TO THE INTERIOR GROUND RING WITH #6 AWG STRANDED GREEN INSULATED CONDUCTOR.

(D) BOND TO INTERIOR GROUND RING: #2 AWG SOLID TINNED COPPER WIRE PRIMARY BONDS SHALL BE PROVIDED AT LEAST AT FOUR POINTS ON THE INTERIOR GROUND RING, LOCATED AT THE CORNERS OF THE BUILDING OR ROOM.

(E) GROUND ROD: UL LISTED COPPER CLAD STEEL. MINIMUM 1/2" DIAMETER BY EIGHT FEET LONG. GROUND RODS SHALL BE INSTALLED WITH INSPECTION SLEEVES. GROUND RODS SHALL BE DRIVEN TO THE DEPTH OF GROUND RING CONDUCTOR.

(F) CELL REFERENCE GROUND BAR (CRGB): POINT OF GROUND REFERENCE FOR ALL COMMUNICATIONS EQUIPMENT FRAMES. ALL BONDS ARE MADE WITH #2 AWG UNLESS NOTED OTHERWISE STRANDED GREEN INSULATED COPPER CONDUCTORS. BOND TO COMMON BUILDING GROUND SYSTEM WITH (2) #2 SOLID TINNED COPPER CONDUCTORS.

(G) HATCH PLATE GROUND BAR: BOND TO THE COMMON BUILDING GROUND SYSTEM WITH TWO #2 AWG STRANDED GREEN INSULATED COPPER CONDUCTORS. WHEN A HATCH–PLATE AND A CELL REFERENCE GROUND BAR ARE BOTH PRESENT, THE CRGB MUST BE CONNECTED TO THE HATCH–PLATE AND TO THE INTERIOR GROUND RING USING (2) TWO #2 AWG STRANDED GREEN INSULATED COPPER CONDUCTORS EACH.

(H) EXTERIOR CABLE ENTRY PORT GROUND BARS: LOCATED AT THE ENTRANCE TO THE CELL SITE ROOM. BOND TO GROUND RING WITH A #2 AWG SOLID TINNED COPPER CONDUCTORS WITH MECHANICAL CONNECTIONS.

(J) TELCO GROUND BAR: BOND TO BOTH CELL REFERENCE GROUND BAR OR EXTERIOR GROUND RING.

(K) FRAME BONDING: THE BONDING POINT FOR TELECOM EQUIPMENT FRAMES SHALL BE THE GROUND BUS THAT IS NOT ISOLATED FROM THE EQUIPMENTS METAL FRAMEWORK.

(L) INTERIOR UNIT BONDS: METAL FRAMES, CABINETS AND INDIVIDUAL METALLIC UNITS LOCATED WITH THE AREA OF THE INTERIOR GROUND RING REQUIRE A #6 AWG STRANDED GREEN INSULATED COPPER BOND TO THE INTERIOR GROUND RING.

(M) FENCE AND GATE GROUNDING: METAL FENCES SHALL BE BONDED TO THE COMMON BUILDING GROUND SYSTEM WITH A #2 AWG SOLID TINNED COPPER CONDUCTOR AT AN INTERVAL NOT EXCEEDING 25 FEET. BONDS SHALL BE MADE AT EACH GATE POST AND ACROSS GATE OPENINGS.

(N) EXTERIOR UNIT BONDS: METALLIC OBJECTS, EXTERNAL TO OR MOUNTED TO THE BUILDING, SHALL BE BONDED TO THE COMMON BUILDING GROUND SYSTEM. USING #2 TINNED SOLID COPPER WIRE

(P) ICE BRIDGE SUPPORTS: EACH ICE BRIDGE LEG SHALL BE BONDED TO THE GROUND RING WITH #2 AWG BARE TINNED COPPER CONDUCTOR. PROVIDE EXOTHERMIC WELDS AT BOTH THE ICE BRIDGE LEG AND BURIED GROUND RING.

(Q) DURING ALL DC POWER SYSTEM CHANGES INCLUDING DC SYSTEM CHANGE OUTS, RECTIFIER REPLACEMENTS OR ADDITIONS, BREAKER DISTRIBUTION CHANGES, BATTERY ADDITIONS, BATTERY REPLACEMENTS AND INSTALLATIONS OR CHANGES TO DC CONVERTER SYSTEMS IT SHALL BE REQUIRED THAT SERVICE CONTRACTORS VERIFY ALL DC POWER SYSTEMS ARE EQUIPPED WITH A MASTER DC SYSTEM RETURN GROUND CONDUCTOR FROM THE DC POWER SYSTEM COMMON RETURN BUS DIRECTLY CONNECTED TO THE CELL SITE REFERENCE GROUND BAR

(R) ROOFTOP COLLECTOR BUSS BAR IS TO BE MECHANICALLY BONDED TO COMMON BUILDING GROUND SYSTEM.

REFER TO DISH Wireless L.L.C. GROUNDING NOTES.

## GROUNDING KEY NOTES

NO SCALE

2

dish wireless.
5701 SOUTH SANTA FE DRIVE
LITTLETON, CO 80120

NB+C TOTALLY COMMITTED
NB+C ENGINEERING SERVICES, LLC.
100 APOLLO DRIVE
SUITE 303
CHELMSFORD, MA 01824
(978) 856-8308

COMMONWEALTH OF MASSACHUSETTS
KRUPAKAR KOLLEPARA
NO. 50019
REGISTERED PROFESSIONAL ENGINEER

IT IS A VIOLATION OF LAW FOR ANY PERSON, UNLESS THEY ARE ACTING UNDER THE DIRECTION OF A LICENSED PROFESSIONAL ENGINEER, TO ALTER THIS DOCUMENT.

| DRAWN BY: | CHECKED BY: | APPROVED BY: |
|---|---|---|
| CSG | NSB | DRG |

RFDS REV #: 1

CONSTRUCTION DOCUMENTS

SUBMITTALS

| REV | DATE | DESCRIPTION |
|---|---|---|
| 0 | 07/28/2023 | ISSUED FOR REVIEW |
| 1 | 08/30/2023 | BILL OF MATERIALS |

A&E PROJECT NUMBER
100753

DISH Wireless L.L.C.
PROJECT INFORMATION
BOBOS01058A
460 HILLSIDE AVENUE
NEEDHAM MA, 02494

SHEET TITLE
GROUNDING PLANS AND NOTES

SHEET NUMBER
G-1

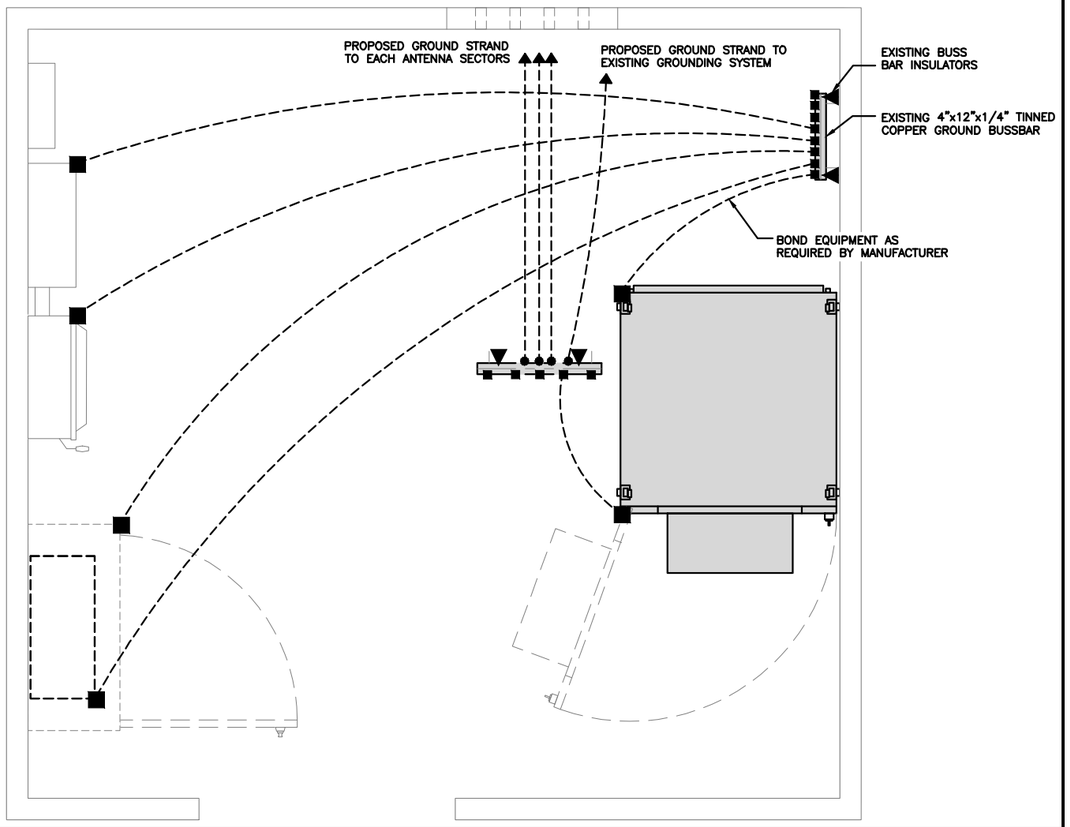


TYPICAL EQUIPMENT GROUNDING PLAN | NO SCALE | 1

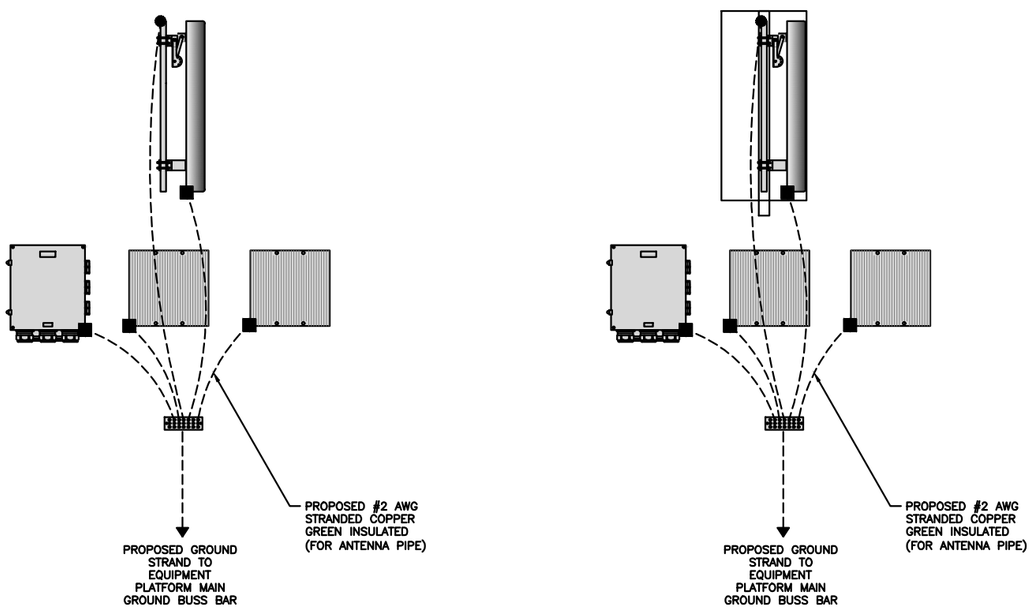


TYPICAL ROOFTOP ANTENNA GROUNDING PLAN | NO SCALE | 2

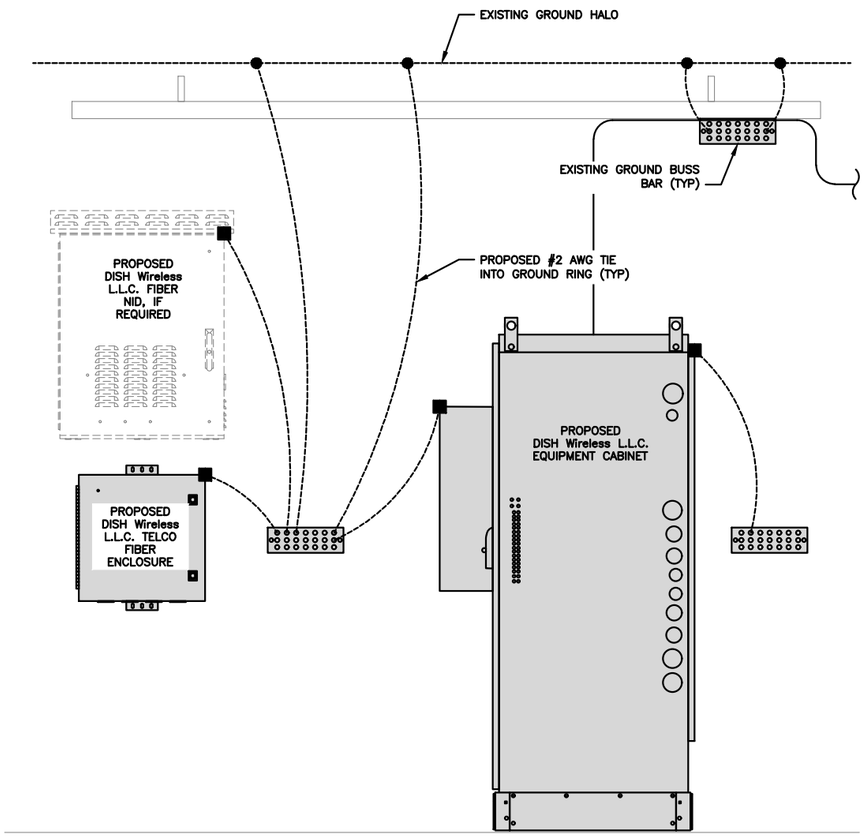


H-FRAME GROUNDING DETAIL | NO SCALE | 3

dish wireless.

5701 SOUTH SANTA FE DRIVE
LITTLETON, CO 80120

NB+C TOTALLY COMMITTED

NB+C ENGINEERING SERVICES, LLC.

100 APOLLO DRIVE
SUITE 303
CHELMSFORD, MA 01824
(978) 856-8308

COMMONWEALTH OF MASSACHUSETTS
KRUPAKAR KOLLAMPARAMBIL
NO. 50019
REGISTERED PROFESSIONAL ENGINEER

IT IS A VIOLATION OF LAW FOR ANY PERSON, UNLESS THEY ARE ACTING UNDER THE DIRECTION OF A LICENSED PROFESSIONAL ENGINEER, TO ALTER THIS DOCUMENT.

| DRAWN BY: | CHECKED BY: | APPROVED BY: |
|---|---|---|
| CSG | NSB | DRG |

RFDS REV #: 1

CONSTRUCTION DOCUMENTS

SUBMITTALS

| REV | DATE | DESCRIPTION |
|---|---|---|
| 0 | 07/28/2023 | ISSUED FOR REVIEW |
| 1 | 08/30/2023 | BILL OF MATERIALS |

A&E PROJECT NUMBER
100753

DISH Wireless L.L.C. PROJECT INFORMATION
BOBOS01058A
460 HILLSIDE AVENUE
NEEDHAM MA, 02494

SHEET TITLE
GROUNDING DETAILS

SHEET NUMBER
G-2

1. EXOTHERMIC WELD (2) TWO, #2 AWG BARE TINNED SOLID COPPER CONDUCTORS TO GROUND BAR. ROUTE CONDUCTORS TO BURIED GROUND RING AND PROVIDE PARALLEL EXOTHERMIC WELD.
2. ALL EXTERIOR GROUNDING HARDWARE SHALL BE STAINLESS STEEL 3/8" DIAMETER OR LARGER. ALL HARDWARE 18–8 STAINLESS STEEL INCLUDING LOCK WASHERS, COAT ALL SURFACES WITH AN ANTI–OXIDANT COMPOUND BEFORE MATING.
3. FOR GROUND BOND TO STEEL ONLY: COAT ALL SURFACES WITH AN ANTI–OXIDANT COMPOUND BEFORE MATING.
4. DO NOT INSTALL CABLE GROUNDING KIT AT A BEND AND ALWAYS DIRECT GROUND CONDUCTOR DOWN TO GROUNDING BUS.
5. NUT & WASHER SHALL BE PLACED ON THE FRONT SIDE OF THE GROUND BAR AND BOLTED ON THE BACK SIDE.
6. ALL GROUNDING PARTS AND EQUIPMENT TO BE SUPPLIED AND INSTALLED BY CONTRACTOR.
7. THE CONTRACTOR SHALL BE RESPONSIBLE FOR INSTALLING ADDITIONAL GROUND BAR AS REQUIRED.
8. ENSURE THE WIRE INSULATION TERMINATION IS WITHIN 1/8" OF THE BARREL (NO SHINERS).

**TYPICAL GROUNDING NOTES** — NO SCALE — 1

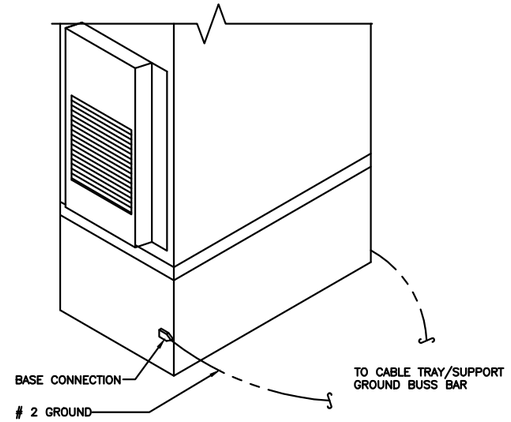


**OUTDOOR CABINET GROUNDING** — NO SCALE — 2

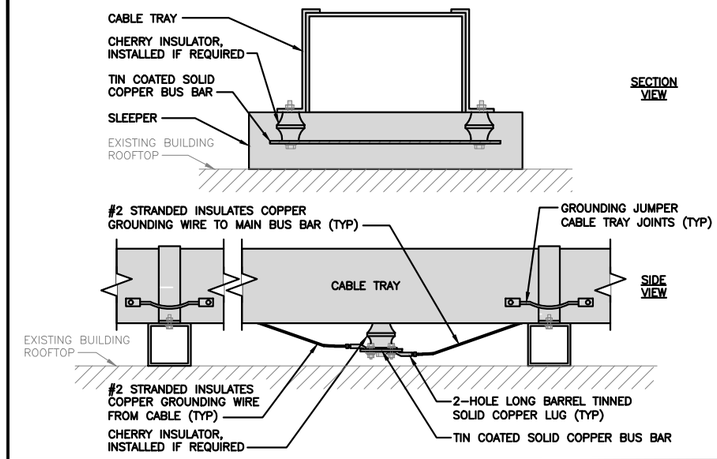


**TYPICAL CABLE TRAY GROUND BUSS BAR** — NO SCALE — 3

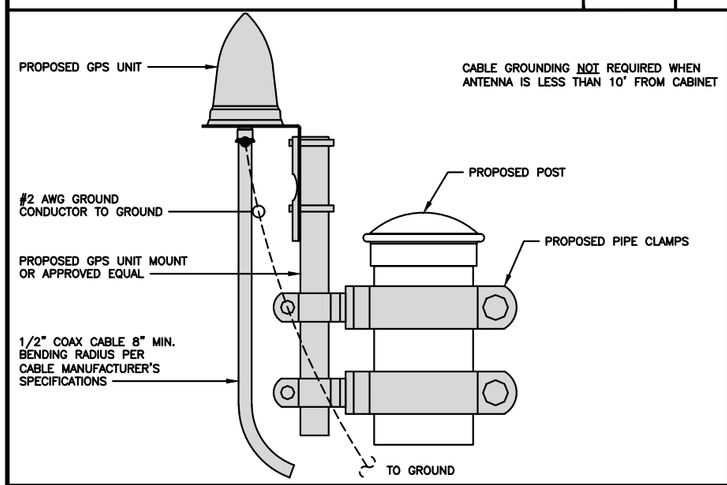


**TYPICAL GPS UNIT GROUNDING** — NO SCALE — 4

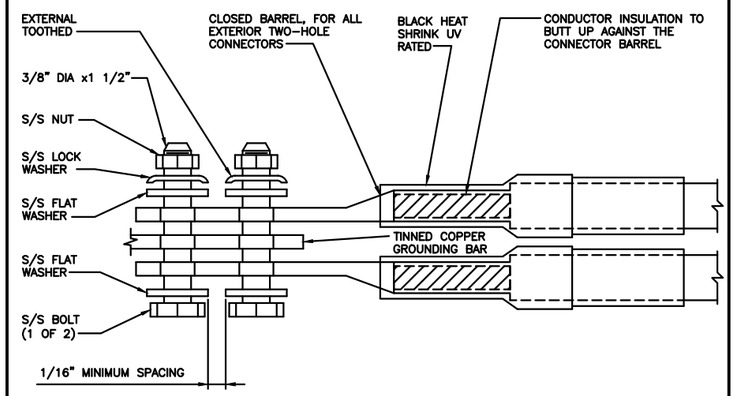


**TYPICAL EXTERIOR TWO HOLE LUG** — NO SCALE — 5

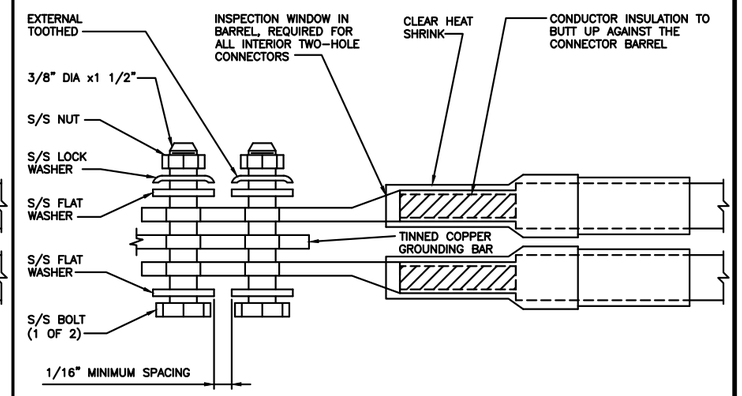


**TYPICAL INTERIOR TWO HOLE LUG** — NO SCALE — 6

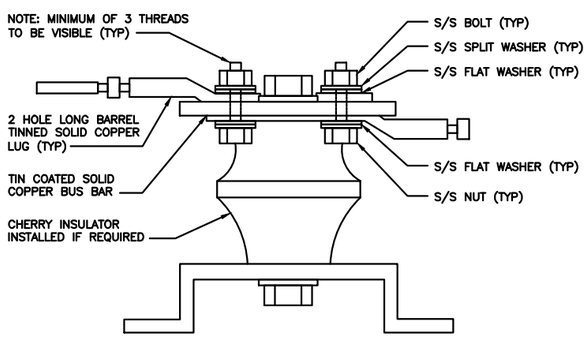


**LUG DETAIL** — NO SCALE — 7

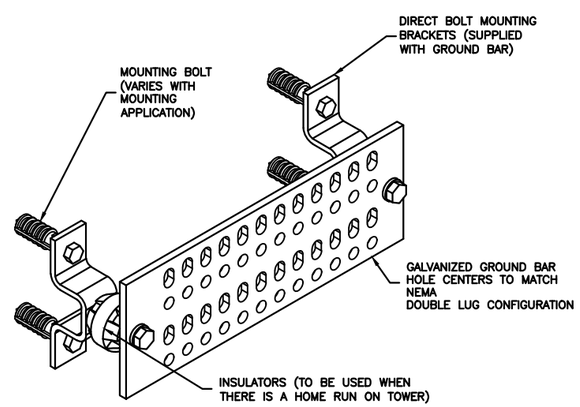


**GROUND BAR DETAIL** — NO SCALE — 8

**NOTE**

REMOVE ANY PAINT ON PIPE OR FITTING SURFACE UNDER BONDING CLAMP.

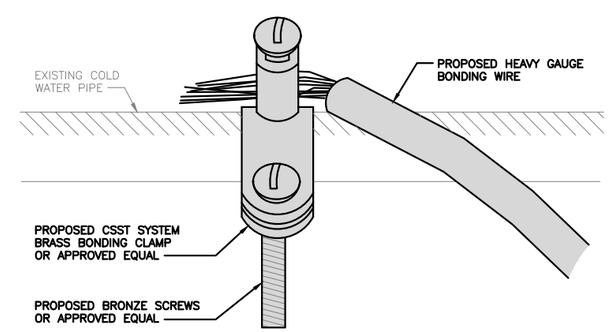


**TYPICAL COLD WATER CONDUIT GROUNDING DETAIL** — NO SCALE — 9


dish wireless.

5701 SOUTH SANTA FE DRIVE
LITTLETON, CO 80120

NB+C TOTALLY COMMITTED

NB+C ENGINEERING SERVICES, LLC.

100 APOLLO DRIVE
SUITE 303
CHELMSFORD, MA 01824
(978) 856-8308


COMMONWEALTH OF MASSACHUSETTS — KRUPAKAR KOLLAMPARA — NO. 50019 — REGISTERED PROFESSIONAL ENGINEER


IT IS A VIOLATION OF LAW FOR ANY PERSON, UNLESS THEY ARE ACTING UNDER THE DIRECTION OF A LICENSED PROFESSIONAL ENGINEER, TO ALTER THIS DOCUMENT.


| DRAWN BY: | CHECKED BY: | APPROVED BY: |
|---|---|---|
| CSG | NSB | DRG |

RFDS REV #: 1

CONSTRUCTION DOCUMENTS

SUBMITTALS

| REV | DATE | DESCRIPTION |
|---|---|---|
| 0 | 07/28/2023 | ISSUED FOR REVIEW |
| 1 | 08/30/2023 | BILL OF MATERIALS |

A&E PROJECT NUMBER
100753

DISH Wireless L.L.C.
PROJECT INFORMATION
BOBOS01058A
460 HILLSIDE AVENUE
NEEDHAM MA, 02494

SHEET TITLE
GROUNDING DETAILS

SHEET NUMBER
G-3

## HYBRID/DISCREET CABLES

3/4" TAPE WIDTHS WITH 3/4" SPACING

LOW-BAND RRH
(600 MHz N71 BASEBAND) +
(850 MHz N26 BAND) +
(700 MHz N29 BAND) – OPTIONAL PER MARKET

ADD FREQUENCY COLOR TO SECTOR BAND
(CBRS WILL USE YELLOW BAND)

| ALPHA RRH | | | | BETA RRH | | | | GAMMA RRH | | | |
|---|---|---|---|---|---|---|---|---|---|---|---|
| PORT 1 + SLANT | PORT 2 – SLANT | PORT 3 + SLANT | PORT 4 – SLANT | PORT 1 + SLANT | PORT 2 – SLANT | PORT 3 + SLANT | PORT 4 – SLANT | PORT 1 + SLANT | PORT 2 – SLANT | PORT 3 + SLANT | PORT 4 – SLANT |
| RED | RED | RED | RED | BLUE | BLUE | BLUE | BLUE | GREEN | GREEN | GREEN | GREEN |
| ORANGE | ORANGE | RED | RED | ORANGE | ORANGE | BLUE | BLUE | ORANGE | ORANGE | GREEN | GREEN |
| | WHITE (–) PORT | ORANGE | ORANGE | | WHITE (–) PORT | ORANGE | ORANGE | | WHITE (–) PORT | ORANGE | ORANGE |
| | | | WHITE (–) PORT | | | | WHITE (–) PORT | | | | WHITE (–) PORT |

MID-BAND RRH
(AWS BANDS N66+N70)

ADD FREQUENCY COLOR TO SECTOR BAND
(CBRS WILL USE YELLOW BANDS)

| | | | | | | | | | | | |
|---|---|---|---|---|---|---|---|---|---|---|---|
| RED | RED | RED | RED | BLUE | BLUE | BLUE | BLUE | GREEN | GREEN | GREEN | GREEN |
| PURPLE | PURPLE | RED | RED | PURPLE | PURPLE | BLUE | BLUE | PURPLE | PURPLE | GREEN | GREEN |
| | WHITE (–) PORT | PURPLE | PURPLE | | WHITE (–) PORT | PURPLE | PURPLE | | WHITE (–) PORT | PURPLE | PURPLE |
| | | | WHITE (–) PORT | | | | WHITE (–) PORT | | | | WHITE (–) PORT |

## HYBRID/DISCREET CABLES

INCLUDE SECTOR BANDS BEING SUPPORTED ALONG WITH FREQUENCY BANDS.

EXAMPLE 1 – HYBRID, OR DISCREET, SUPPORTS ALL SECTORS, BOTH LOW-BANDS AND MID-BANDS.

EXAMPLE 2 – HYBRID, OR DISCREET, SUPPORTS CBRS ONLY, ALL SECTORS.

EXAMPLE 3 – MAIN COAX WITH GROUND MOUNTED RRHs.

| EXAMPLE 1 | EXAMPLE 2 | EXAMPLE 3 COAX#1 (ALPHA) | CANISTER COAX #2 (ALPHA) |
|---|---|---|---|
| RED | RED | RED | RED |
| BLUE | BLUE | | RED |
| GREEN | GREEN | | |
| ORANGE | YELLOW | | |
| PURPLE | | | |

## FIBER JUMPERS TO RRHs

LOW-BAND HHR FIBER CABLES HAVE SECTOR STRIPE ONLY.

| LOW BAND RRH | MID BAND RRH | LOW BAND RRH | MID BAND RRH | LOW BAND RRH | MID BAND RRH |
|---|---|---|---|---|---|
| RED | RED | BLUE | BLUE | GREEN | GREEN |
| ORANGE | PURPLE | ORANGE | PURPLE | ORANGE | PURPLE |

## POWER CABLES TO RRHs

LOW-BAND RRH POWER CABLES HAVE SECTOR STRIPE ONLY

| LOW BAND RRH | MID BAND RRH | LOW BAND RRH | MID BAND RRH | LOW BAND RRH | MID BAND RRH |
|---|---|---|---|---|---|
| RED | RED | BLUE | BLUE | GREEN | GREEN |
| ORANGE | PURPLE | ORANGE | PURPLE | ORANGE | PURPLE |

## RET MOTORS AT ANTENNAS

RET CONTROL IS HANDLED BY THE MID-BAND RRH WHEN ONE SET OF RET PORTS EXIST ON ANTENNA.

SEPARATE RET CABLES ARE USED WHEN ANTENNA PORTS PROVIDE INPUTS FOR BOTH LOW AND MID BANDS.

| ANTENNA 1 MID BAND IN | ANTENNA 1 LOW BAND IN | ANTENNA 1 MID BAND IN | ANTENNA 1 LOW BAND IN | ANTENNA 1 MID BAND IN | ANTENNA 1 LOW BAND IN |
|---|---|---|---|---|---|
| RED | RED | BLUE | BLUE | GREEN | GREEN |
| PURPLE | ORANGE | PURPLE | ORANGE | PURPLE | ORANGE |

## MICROWAVE RADIO LINKS

LINKS WILL HAVE A 1.5–2 INCH WHITE WRAP WITH THE AZIMUTH COLOR OVERLAPPING IN THE MIDDLE.
ADD ADDITIONAL SECTOR COLOR BANDS FOR EACH ADDITIONAL MW RADIO.

MICROWAVE CABLES WILL REQUIRE P-TOUCH LABELS INSIDE THE CABINET TO IDENTIFY THE LOCAL AND REMOTE SITE ID's.

| FORWARD AZIMUTH OF 0–120 DEGREES | | FORWARD AZIMUTH OF 120–240 DEGREES | | FORWARD AZIMUTH OF 240–359 DEGREES | |
|---|---|---|---|---|---|
| PRIMARY | SECONDARY | PRIMARY | SECONDARY | PRIMARY | SECONDARY |
| WHITE | WHITE | WHITE | WHITE | WHITE | WHITE |
| RED | RED | BLUE | BLUE | GREEN | GREEN |
| WHITE | WHITE | WHITE | WHITE | WHITE | WHITE |
| | RED | | BLUE | | GREEN |
| | WHITE | | WHITE | | WHITE |

RF CABLE COLOR CODES | NO SCALE | 1

LOW BANDS (N71+N26) OPTIONAL – (N29): ORANGE

AWS (N66+N70+H-BLOCK): PURPLE

CBRS TECH (3 GHz): YELLOW

NEGATIVE SLANT PORT ON ANT/RRH: WHITE

ALPHA SECTOR: RED

BETA SECTOR: BLUE

GAMMA SECTOR: GREEN

COLOR IDENTIFIER | NO SCALE | 2

NOT USED | NO SCALE | 3

NOT USED | NO SCALE | 4


dish wireless.
5701 SOUTH SANTA FE DRIVE
LITTLETON, CO 80120

NB+C TOTALLY COMMITTED
NB+C ENGINEERING SERVICES, LLC.
100 APOLLO DRIVE
SUITE 303
CHELMSFORD, MA 01824
(978) 856-8308


COMMONWEALTH OF MASSACHUSETTS
KRUPAKAR KOLLAMPARA
NO. 50019
REGISTERED PROFESSIONAL ENGINEER


IT IS A VIOLATION OF LAW FOR ANY PERSON, UNLESS THEY ARE ACTING UNDER THE DIRECTION OF A LICENSED PROFESSIONAL ENGINEER, TO ALTER THIS DOCUMENT.


| DRAWN BY: | CHECKED BY: | APPROVED BY: |
|---|---|---|
| CSG | NSB | DRG |

RFDS REV #: 1

CONSTRUCTION DOCUMENTS

SUBMITTALS

| REV | DATE | DESCRIPTION |
|---|---|---|
| 0 | 07/28/2023 | ISSUED FOR REVIEW |
| 1 | 08/30/2023 | BILL OF MATERIALS |

A&E PROJECT NUMBER
100753

DISH Wireless L.L.C.
PROJECT INFORMATION
BOBOS01058A
460 HILLSIDE AVENUE
NEEDHAM MA, 02494

SHEET TITLE
RF
CABLE COLOR CODE

SHEET NUMBER
RF-1

EXOTHERMIC CONNECTION

MECHANICAL CONNECTION

BUSS BAR INSULATOR

CHEMICAL ELECTROLYTIC GROUNDING SYSTEM

TEST CHEMICAL ELECTROLYTIC GROUNDING SYSTEM

EXOTHERMIC WITH INSPECTION SLEEVE

GROUNDING BAR

GROUND ROD

TEST GROUND ROD WITH INSPECTION SLEEVE

SINGLE POLE SWITCH

DUPLEX RECEPTACLE

DUPLEX GFCI RECEPTACLE

FLUORESCENT LIGHTING FIXTURE
(2) TWO LAMPS 48–T8

SMOKE DETECTION (DC)

EMERGENCY LIGHTING (DC)

SECURITY LIGHT W/PHOTOCELL LITHONIA ALXW
OFFNI LINEA ROYCE K–SR4–120–PE–DDBTXD

WOOD/WROUGHT IRON FENCE

WALL STRUCTURE

LEASE AREA

PROPERTY LINE (PL)

SETBACKS

ICE BRIDGE

CABLE TRAY

WATER LINE

UNDERGROUND POWER

UNDERGROUND TELCO

OVERHEAD POWER

OVERHEAD TELCO

UNDERGROUND TELCO/POWER

ABOVE GROUND POWER

ABOVE GROUND TELCO

ABOVE GROUND TELCO/POWER

WORKPOINT

SECTION REFERENCE

DETAIL REFERENCE

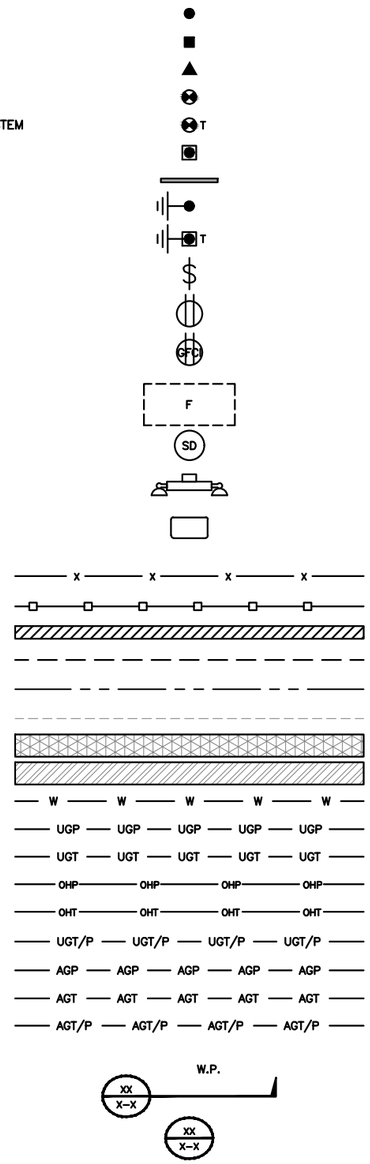


## LEGEND

| | |
|---|---|
| AB | ANCHOR BOLT |
| ABV | ABOVE |
| AC | ALTERNATING CURRENT |
| ADDL | ADDITIONAL |
| AFF | ABOVE FINISHED FLOOR |
| AFG | ABOVE FINISHED GRADE |
| AGL | ABOVE GROUND LEVEL |
| AIC | AMPERAGE INTERRUPTION CAPACITY |
| ALUM | ALUMINUM |
| ALT | ALTERNATE |
| ANT | ANTENNA |
| APPROX | APPROXIMATE |
| ARCH | ARCHITECTURAL |
| ATS | AUTOMATIC TRANSFER SWITCH |
| AWG | AMERICAN WIRE GAUGE |
| BATT | BATTERY |
| BLDG | BUILDING |
| BLK | BLOCK |
| BLKG | BLOCKING |
| BM | BEAM |
| BTC | BARE TINNED COPPER CONDUCTOR |
| BOF | BOTTOM OF FOOTING |
| CAB | CABINET |
| CANT | CANTILEVERED |
| CHG | CHARGING |
| CLG | CEILING |
| CLR | CLEAR |
| COL | COLUMN |
| COMM | COMMON |
| CONC | CONCRETE |
| CONSTR | CONSTRUCTION |
| DBL | DOUBLE |
| DC | DIRECT CURRENT |
| DEPT | DEPARTMENT |
| DF | DOUGLAS FIR |
| DIA | DIAMETER |
| DIAG | DIAGONAL |
| DIM | DIMENSION |
| DWG | DRAWING |
| DWL | DOWEL |
| EA | EACH |
| EC | ELECTRICAL CONDUCTOR |
| EL. | ELEVATION |
| ELEC | ELECTRICAL |
| EMT | ELECTRICAL METALLIC TUBING |
| ENG | ENGINEER |
| EQ | EQUAL |
| EXP | EXPANSION |
| EXT | EXTERIOR |
| EW | EACH WAY |
| FAB | FABRICATION |
| FF | FINISH FLOOR |
| FG | FINISH GRADE |
| FIF | FACILITY INTERFACE FRAME |
| FIN | FINISH(ED) |
| FLR | FLOOR |
| FDN | FOUNDATION |
| FOC | FACE OF CONCRETE |
| FOM | FACE OF MASONRY |
| FOS | FACE OF STUD |
| FOW | FACE OF WALL |
| FS | FINISH SURFACE |
| FT | FOOT |
| FTG | FOOTING |
| GA | GAUGE |
| GEN | GENERATOR |
| GFCI | GROUND FAULT CIRCUIT INTERRUPTER |
| GLB | GLUE LAMINATED BEAM |
| GLV | GALVANIZED |
| GPS | GLOBAL POSITIONING SYSTEM |
| GND | GROUND |
| GSM | GLOBAL SYSTEM FOR MOBILE |
| HDG | HOT DIPPED GALVANIZED |
| HDR | HEADER |
| HGR | HANGER |
| HVAC | HEAT/VENTILATION/AIR CONDITIONING |
| HT | HEIGHT |
| IGR | INTERIOR GROUND RING |
| IN | INCH |
| INT | INTERIOR |
| LB(S) | POUND(S) |
| LF | LINEAR FEET |
| LTE | LONG TERM EVOLUTION |
| MAS | MASONRY |
| MAX | MAXIMUM |
| MB | MACHINE BOLT |
| MECH | MECHANICAL |
| MFR | MANUFACTURER |
| MGB | MASTER GROUND BAR |
| MIN | MINIMUM |
| MISC | MISCELLANEOUS |
| MTL | METAL |
| MTS | MANUAL TRANSFER SWITCH |
| MW | MICROWAVE |
| NEC | NATIONAL ELECTRIC CODE |
| NM | NEWTON METERS |
| NO. | NUMBER |
| # | NUMBER |
| NTS | NOT TO SCALE |
| OC | ON–CENTER |
| OSHA | OCCUPATIONAL SAFETY AND HEALTH ADMINISTRATION |
| OPNG | OPENING |
| P/C | PRECAST CONCRETE |
| PCS | PERSONAL COMMUNICATION SERVICES |
| PCU | PRIMARY CONTROL UNIT |
| PRC | PRIMARY RADIO CABINET |
| PP | POLARIZING PRESERVING |
| PSF | POUNDS PER SQUARE FOOT |
| PSI | POUNDS PER SQUARE INCH |
| PT | PRESSURE TREATED |
| PWR | POWER CABINET |
| QTY | QUANTITY |
| RAD | RADIUS |
| RECT | RECTIFIER |
| REF | REFERENCE |
| REINF | REINFORCEMENT |
| REQ'D | REQUIRED |
| RET | REMOTE ELECTRIC TILT |
| RF | RADIO FREQUENCY |
| RMC | RIGID METALLIC CONDUIT |
| RRH | REMOTE RADIO HEAD |
| RRU | REMOTE RADIO UNIT |
| RWY | RACEWAY |
| SCH | SCHEDULE |
| SHT | SHEET |
| SIAD | SMART INTEGRATED ACCESS DEVICE |
| SIM | SIMILAR |
| SPEC | SPECIFICATION |
| SQ | SQUARE |
| SS | STAINLESS STEEL |
| STD | STANDARD |
| STL | STEEL |
| TEMP | TEMPORARY |
| THK | THICKNESS |
| TMA | TOWER MOUNTED AMPLIFIER |
| TN | TOE NAIL |
| TOA | TOP OF ANTENNA |
| TOC | TOP OF CURB |
| TOF | TOP OF FOUNDATION |
| TOP | TOP OF PLATE (PARAPET) |
| TOS | TOP OF STEEL |
| TOW | TOP OF WALL |
| TVSS | TRANSIENT VOLTAGE SURGE SUPPRESSION |
| TYP | TYPICAL |
| UG | UNDERGROUND |
| UL | UNDERWRITERS LABORATORY |
| UNO | UNLESS NOTED OTHERWISE |
| UMTS | UNIVERSAL MOBILE TELECOMMUNICATIONS SYSTEM |
| UPS | UNITERRUPTIBLE POWER SYSTEM (DC POWER PLANT) |
| VIF | VERIFIED IN FIELD |
| W | WIDE |
| W/ | WITH |
| WD | WOOD |
| WP | WEATHERPROOF |
| WT | WEIGHT |

## ABBREVIATIONS


dish wireless.

5701 SOUTH SANTA FE DRIVE
LITTLETON, CO 80120

NB+C TOTALLY COMMITTED

NB+C ENGINEERING SERVICES, LLC.

100 APOLLO DRIVE
SUITE 303
CHELMSFORD, MA 01824
(978) 856-8308


COMMONWEALTH OF MASSACHUSETTS
KRUPAKAR KOLLAMPARAMBIL
NO. 50019
REGISTERED PROFESSIONAL ENGINEER


IT IS A VIOLATION OF LAW FOR ANY PERSON, UNLESS THEY ARE ACTING UNDER THE DIRECTION OF A LICENSED PROFESSIONAL ENGINEER, TO ALTER THIS DOCUMENT.


| DRAWN BY: | CHECKED BY: | APPROVED BY: |
|---|---|---|
| CSG | NSB | DRG |

RFDS REV #: 1

CONSTRUCTION DOCUMENTS

SUBMITTALS

| REV | DATE | DESCRIPTION |
|---|---|---|
| 0 | 07/28/2023 | ISSUED FOR REVIEW |
| 1 | 08/30/2023 | BILL OF MATERIALS |

A&E PROJECT NUMBER

100753

DISH Wireless L.L.C.
PROJECT INFORMATION

BOBOS01058A

460 HILLSIDE AVENUE
NEEDHAM MA, 02494

SHEET TITLE

LEGEND AND ABBREVIATIONS

SHEET NUMBER

GN-1

## SIGN TYPES

| TYPE | COLOR | COLOR CODE PURPOSE |
|---|---|---|
| INFORMATION | GREEN | **"INFORMATIONAL SIGN"** TO NOTIFY OTHERS OF SITE OWNERSHIP & CONTACT NUMBER AND POTENTIAL RF EXPOSURE. |
| NOTICE | BLUE | **"NOTICE BEYOND THIS POINT"** RF FIELDS BEYOND THIS POINT MAY EXCEED THE FCC GENERAL PUBLIC EXPOSURE LIMIT. OBEY ALL POSTED SIGNS AND SITE GUIDELINES FOR WORKING IN RF ENVIRONMENTS. IN ACCORDANCE WITH FEDERAL COMMUNICATIONS COMMISSION RULES ON RADIO FREQUENCY EMISSIONS 47 CFR–1.1307(b) |
| CAUTION | YELLOW | **"CAUTION BEYOND THIS POINT"** RF FIELDS BEYOND THIS POINT MAY EXCEED THE FCC GENERAL PUBLIC EXPOSURE LIMIT. OBEY ALL POSTED SIGNS AND SITE GUIDELINES FOR WORKING IN RF ENVIRONMENTS. IN ACCORDANCE WITH FEDERAL COMMUNICATIONS COMMISSION RULES ON RADIO FREQUENCY EMISSIONS 47 CFR–1.1307(b) |
| WARNING | ORANGE/RED | **"WARNING BEYOND THIS POINT"** RF FIELDS AT THIS SITE EXCEED FCC RULES FOR HUMAN EXPOSURE. FAILURE TO OBEY ALL POSTED SIGNS AND SITE GUIDELINES FOR WORKING IN RF ENVIRONMENTS COULD RESULT IN SERIOUS INJURY. IN ACCORDANCE WITH FEDERAL COMMUNICATIONS COMMISSION RULES ON RADIO FREQUENCY EMISSIONS 47 CFR–1.1307(b) |

SIGN PLACEMENT:

- RF SIGNAGE PLACEMENT SHALL FOLLOW THE RECOMMENDATIONS OF AN EXISTING EME REPORT, CREATED BY A THIRD PARTY PREVIOUSLY AUTHORIZED BY DISH Wireless L.L.C.
- INFORMATION SIGN (GREEN) SHALL BE LOCATED ON EXISTING DISH Wireless L.L.C EQUIPMENT.
  - A) IF THE INFORMATION SIGN IS A STICKER, IT SHALL BE PLACED ON EXISTING DISH Wireless L.L.C EQUIPMENT CABINET.
  - B) IF THE INFORMATION SIGH IS A METAL SIGN IT SHALL BE PLACED ON EXISTING DISH Wireless L.L.C H–FRAME WITH A SECURE ATTACH METHOD.
- IF EME REPORT IS NOT AVAILABLE AT THE TIME OF CREATION OF CONSTRUCTION DOCUMENTS; PLEASE CONTACT DISH Wireless L.L.C. CONSTRUCTION MANAGER FOR FURTHER INSTRUCTION ON HOW TO PROCEED.

NOTES:

1. FOR DISH Wireless L.L.C. LOGO, SEE DISH Wireless L.L.C. DESIGN SPECIFICATIONS (PROVIDED BY DISH Wireless L.L.C.)
2. SITE ID SHALL BE APPLIED TO SIGNS USING "LASER ENGRAVING" OR ANY OTHER WEATHER RESISTANT METHOD (DISH Wireless L.L.C. APPROVAL REQUIRED)
3. TEXT FOR SIGNAGE SHALL INDICATE CORRECT SITE NAME AND NUMBER AS PER DISH Wireless L.L.C. CONSTRUCTION MANAGER RECOMMENDATIONS.
4. CABINET/SHELTER MOUNTING APPLICATION REQUIRES ANOTHER PLATE APPLIED TO THE FACE OF THE CABINET WITH WATER PROOF POLYURETHANE ADHESIVE
5. ALL SIGNS WILL BE SECURED WITH EITHER STAINLESS STEEL ZIP TIES OR STAINLESS STEEL TECH SCREWS
6. ALL SIGNS TO BE 8.5"x11" AND MADE WITH 0.04" OF ALUMINUM MATERIAL

# INFORMATION

**This is an access point to an area with transmitting antennas.**

**Obey all signs and barriers beyond this point.**
**Call the DISH Wireless L.L.C. NOC at 1-866-624-6874**

**Site ID:** _____

THIS SIGN IS FOR REFERENCE PURPOSES ONLY

# NOTICE

Transmitting Antenna(s)

Radio frequency fields beyond this point MAY *EXCEED* the FCC Occupational exposure limit.

Obey all posted signs and site guidelines for working in radio frequency environments.

Call the DISH Wireless L.L.C. NOC at 1-866-624-6874 prior to working beyond this point.

Site ID: _____

dish

THIS SIGN IS FOR REFERENCE PURPOSES ONLY

# CAUTION

Transmitting Antenna(s)

Radio frequency fields beyond this point MAY *EXCEED* the FCC Occupational exposure limit.

Obey all posted signs and site guidelines for working in radio frequency environments.

Call the DISH Wireless L.L.C. NOC at 1-866-624-6874 prior to working beyond this point.

Site ID: _____

dish

THIS SIGN IS FOR REFERENCE PURPOSES ONLY

# WARNING

Transmitting Antenna(s)

Radio frequency fields beyond this point *EXCEED* the FCC Occupational exposure limit.

Obey all posted signs and site guidelines for working in radio frequency environments.

Call the DISH Wireless L.L.C. NOC at 1-866-624-6874 prior to working beyond this point.

Site ID: _____

dish

THIS SIGN IS FOR REFERENCE PURPOSES ONLY

RF SIGNAGE


dish wireless.

5701 SOUTH SANTA FE DRIVE
LITTLETON, CO 80120

NB+C TOTALLY COMMITTED

NB+C ENGINEERING SERVICES, LLC.

100 APOLLO DRIVE
SUITE 303
CHELMSFORD, MA 01824
(978) 856-8308


COMMONWEALTH OF MASSACHUSETTS
KRUPAKAR KOLLAMPARAMBIL
NO. 50019
REGISTERED PROFESSIONAL ENGINEER


IT IS A VIOLATION OF LAW FOR ANY PERSON, UNLESS THEY ARE ACTING UNDER THE DIRECTION OF A LICENSED PROFESSIONAL ENGINEER, TO ALTER THIS DOCUMENT.


| DRAWN BY: | CHECKED BY: | APPROVED BY: |
|---|---|---|
| CSG | NSB | DRG |

RFDS REV #: 1

CONSTRUCTION DOCUMENTS

SUBMITTALS

| REV | DATE | DESCRIPTION |
|---|---|---|
| 0 | 07/28/2023 | ISSUED FOR REVIEW |
| 1 | 08/30/2023 | BILL OF MATERIALS |

A&E PROJECT NUMBER

100753

DISH Wireless L.L.C. PROJECT INFORMATION

BOBOS01058A

460 HILLSIDE AVENUE
NEEDHAM MA, 02494

SHEET TITLE

RF SIGNAGE

SHEET NUMBER

GN-2

SITE ACTIVITY REQUIREMENTS:

1. NOTICE TO PROCEED – NO WORK SHALL COMMENCE PRIOR TO CONTRACTOR RECEIVING A WRITTEN NOTICE TO PROCEED (NTP) AND THE ISSUANCE OF A PURCHASE ORDER. PRIOR TO ACCESSING/ENTERING THE SITE YOU MUST CONTACT THE DISH Wireless L.L.C. AND TOWER OWNER NOC & THE DISH Wireless L.L.C. AND TOWER OWNER CONSTRUCTION MANAGER.

2. "LOOK UP" – DISH Wireless L.L.C. AND TOWER OWNER SAFETY CLIMB REQUIREMENT:

THE INTEGRITY OF THE SAFETY CLIMB AND ALL COMPONENTS OF THE CLIMBING FACILITY SHALL BE CONSIDERED DURING ALL STAGES OF DESIGN, INSTALLATION, AND INSPECTION. TOWER MODIFICATION, MOUNT REINFORCEMENTS, AND/OR EQUIPMENT INSTALLATIONS SHALL NOT COMPROMISE THE INTEGRITY OR FUNCTIONAL USE OF THE SAFETY CLIMB OR ANY COMPONENTS OF THE CLIMBING FACILITY ON THE STRUCTURE. THIS SHALL INCLUDE, BUT NOT BE LIMITED TO: PINCHING OF THE WIRE ROPE, BENDING OF THE WIRE ROPE FROM ITS SUPPORTS, DIRECT CONTACT OR CLOSE PROXIMITY TO THE WIRE ROPE WHICH MAY CAUSE FRICTIONAL WEAR, IMPACT TO THE ANCHORAGE POINTS IN ANY WAY, OR TO IMPEDE/BLOCK ITS INTENDED USE. ANY COMPROMISED SAFETY CLIMB, INCLUDING EXISTING CONDITIONS MUST BE TAGGED OUT AND REPORTED TO YOUR DISH Wireless L.L.C. AND DISH Wireless L.L.C. AND TOWER OWNER POC OR CALL THE NOC TO GENERATE A SAFETY CLIMB MAINTENANCE AND CONTRACTOR NOTICE TICKET.

3. PRIOR TO THE START OF CONSTRUCTION, ALL REQUIRED JURISDICTIONAL PERMITS SHALL BE OBTAINED. THIS INCLUDES, BUT IS NOT LIMITED TO, BUILDING, ELECTRICAL, MECHANICAL, FIRE, FLOOD ZONE, ENVIRONMENTAL, AND ZONING. AFTER ONSITE ACTIVITIES AND CONSTRUCTION ARE COMPLETED, ALL REQUIRED PERMITS SHALL BE SATISFIED AND CLOSED OUT ACCORDING TO LOCAL JURISDICTIONAL REQUIREMENTS.

4. ALL CONSTRUCTION MEANS AND METHODS; INCLUDING BUT NOT LIMITED TO, ERECTION PLANS, RIGGING PLANS, CLIMBING PLANS, AND RESCUE PLANS SHALL BE THE RESPONSIBILITY OF THE GENERAL CONTRACTOR RESPONSIBLE FOR THE EXECUTION OF THE WORK CONTAINED HEREIN, AND SHALL MEET ANSI/ASSE A10.48 (LATEST EDITION); FEDERAL, STATE, AND LOCAL REGULATIONS; AND ANY APPLICABLE INDUSTRY CONSENSUS STANDARDS RELATED TO THE CONSTRUCTION ACTIVITIES BEING PERFORMED. ALL RIGGING PLANS SHALL ADHERE TO ANSI/ASSE A10.48 (LATEST EDITION) AND DISH Wireless L.L.C. AND TOWER OWNER STANDARDS, INCLUDING THE REQUIRED INVOLVEMENT OF A QUALIFIED ENGINEER FOR CLASS IV CONSTRUCTION, TO CERTIFY THE SUPPORTING STRUCTURE(S) IN ACCORDANCE WITH ANSI/TIA–322 (LATEST EDITION).

5. ALL SITE WORK TO COMPLY WITH DISH Wireless L.L.C. AND TOWER OWNER INSTALLATION STANDARDS FOR CONSTRUCTION ACTIVITIES ON DISH Wireless L.L.C. AND TOWER OWNER TOWER SITE AND LATEST VERSION OF ANSI/TIA–1019–A–2012 "STANDARD FOR INSTALLATION, ALTERATION, AND MAINTENANCE OF ANTENNA SUPPORTING STRUCTURES AND ANTENNAS."

6. IF THE SPECIFIED EQUIPMENT CAN NOT BE INSTALLED AS SHOWN ON THESE DRAWINGS, THE CONTRACTOR SHALL PROPOSE AN ALTERNATIVE INSTALLATION FOR APPROVAL BY DISH Wireless L.L.C. AND TOWER OWNER PRIOR TO PROCEEDING WITH ANY SUCH CHANGE OF INSTALLATION.

7. ALL MATERIALS FURNISHED AND INSTALLED SHALL BE IN STRICT ACCORDANCE WITH ALL APPLICABLE CODES, REGULATIONS AND ORDINANCES. CONTRACTOR SHALL ISSUE ALL APPROPRIATE NOTICES AND COMPLY WITH ALL LAWS, ORDINANCES, RULES, REGULATIONS AND LAWFUL ORDERS OF ANY PUBLIC AUTHORITY REGARDING THE PERFORMANCE OF THE WORK. ALL WORK CARRIED OUT SHALL COMPLY WITH ALL APPLICABLE MUNICIPAL AND UTILITY COMPANY SPECIFICATIONS AND LOCAL JURISDICTIONAL CODES, ORDINANCES AND APPLICABLE REGULATIONS.

8. THE CONTRACTOR SHALL INSTALL ALL EQUIPMENT AND MATERIALS IN ACCORDANCE WITH MANUFACTURER'S RECOMMENDATIONS UNLESS SPECIFICALLY STATED OTHERWISE.

9. THE CONTRACTOR SHALL CONTACT UTILITY LOCATING SERVICES INCLUDING PRIVATE LOCATES SERVICES PRIOR TO THE START OF CONSTRUCTION.

10. ALL EXISTING ACTIVE SEWER, WATER, GAS, ELECTRIC AND OTHER UTILITIES WHERE ENCOUNTERED IN THE WORK, SHALL BE PROTECTED AT ALL TIMES AND WHERE REQUIRED FOR THE PROPER EXECUTION OF THE WORK, SHALL BE RELOCATED AS DIRECTED BY CONTRACTOR. EXTREME CAUTION SHOULD BE USED BY THE CONTRACTOR WHEN EXCAVATING OR DRILLING PIERS AROUND OR NEAR UTILITIES. CONTRACTOR SHALL PROVIDE SAFETY TRAINING FOR THE WORKING CREW. THIS WILL INCLUDE BUT NOT BE LIMITED TO A) FALL PROTECTION B) CONFINED SPACE C) ELECTRICAL SAFETY D) TRENCHING AND EXCAVATION E) CONSTRUCTION SAFETY PROCEDURES.

11. ALL SITE WORK SHALL BE AS INDICATED ON THE STAMPED CONSTRUCTION DRAWINGS AND DISH PROJECT SPECIFICATIONS, LATEST APPROVED REVISION.

12. CONTRACTOR SHALL KEEP THE SITE FREE FROM ACCUMULATING WASTE MATERIAL, DEBRIS, AND TRASH AT THE COMPLETION OF THE WORK. IF NECESSARY, RUBBISH, STUMPS, DEBRIS, STICKS, STONES AND OTHER REFUSE SHALL BE REMOVED FROM THE SITE AND DISPOSED OF LEGALLY.

13. ALL EXISTING INACTIVE SEWER, WATER, GAS, ELECTRIC AND OTHER UTILITIES, WHICH INTERFERE WITH THE EXECUTION OF THE WORK, SHALL BE REMOVED AND/OR CAPPED, PLUGGED OR OTHERWISE DISCONTINUED AT POINTS WHICH WILL NOT INTERFERE WITH THE EXECUTION OF THE WORK, SUBJECT TO THE APPROVAL OF DISH Wireless L.L.C. AND TOWER OWNER, AND/OR LOCAL UTILITIES.

14. THE CONTRACTOR SHALL PROVIDE SITE SIGNAGE IN ACCORDANCE WITH THE TECHNICAL SPECIFICATION FOR SITE SIGNAGE REQUIRED BY LOCAL JURISDICTION AND SIGNAGE REQUIRED ON INDIVIDUAL PIECES OF EQUIPMENT, ROOMS, AND SHELTERS.

15. THE SITE SHALL BE GRADED TO CAUSE SURFACE WATER TO FLOW AWAY FROM THE CARRIER'S EQUIPMENT AND TOWER AREAS.

16. THE SUB GRADE SHALL BE COMPACTED AND BROUGHT TO A SMOOTH UNIFORM GRADE PRIOR TO FINISHED SURFACE APPLICATION.

17. THE AREAS OF THE OWNERS PROPERTY DISTURBED BY THE WORK AND NOT COVERED BY THE TOWER, EQUIPMENT OR DRIVEWAY, SHALL BE GRADED TO A UNIFORM SLOPE, AND STABILIZED TO PREVENT EROSION AS SPECIFIED ON THE CONSTRUCTION DRAWINGS AND/OR PROJECT SPECIFICATIONS.

18. CONTRACTOR SHALL MINIMIZE DISTURBANCE TO EXISTING SITE DURING CONSTRUCTION. EROSION CONTROL MEASURES, IF REQUIRED DURING CONSTRUCTION, SHALL BE IN CONFORMANCE WITH THE LOCAL GUIDELINES FOR EROSION AND SEDIMENT CONTROL.

19. THE CONTRACTOR SHALL PROTECT EXISTING IMPROVEMENTS, PAVEMENTS, CURBS, LANDSCAPING AND STRUCTURES. ANY DAMAGED PART SHALL BE REPAIRED AT CONTRACTOR'S EXPENSE TO THE SATISFACTION OF OWNER.

20. CONTRACTOR SHALL LEGALLY AND PROPERLY DISPOSE OF ALL SCRAP MATERIALS SUCH AS COAXIAL CABLES AND OTHER ITEMS REMOVED FROM THE EXISTING FACILITY. ANTENNAS AND RADIOS REMOVED SHALL BE RETURNED TO THE OWNER'S DESIGNATED LOCATION.

21. CONTRACTOR SHALL LEAVE PREMISES IN CLEAN CONDITION. TRASH AND DEBRIS SHOULD BE REMOVED FROM SITE ON A DAILY BASIS.

22. NO FILL OR EMBANKMENT MATERIAL SHALL BE PLACED ON FROZEN GROUND. FROZEN MATERIALS, SNOW OR ICE SHALL NOT BE PLACED IN ANY FILL OR EMBANKMENT.

GENERAL NOTES:

1.FOR THE PURPOSE OF CONSTRUCTION DRAWING, THE FOLLOWING DEFINITIONS SHALL APPLY:

CONTRACTOR:GENERAL CONTRACTOR RESPONSIBLE FOR CONSTRUCTION

CARRIER:DISH Wireless L.L.C.

TOWER OWNER:TOWER OWNER

2. THESE DRAWINGS HAVE BEEN PREPARED USING STANDARDS OF PROFESSIONAL CARE AND COMPLETENESS NORMALLY EXERCISED UNDER SIMILAR CIRCUMSTANCES BY REPUTABLE ENGINEERS IN THIS OR SIMILAR LOCALITIES. IT IS ASSUMED THAT THE WORK DEPICTED WILL BE PERFORMED BY AN EXPERIENCED CONTRACTOR AND/OR WORKPEOPLE WHO HAVE A WORKING KNOWLEDGE OF THE APPLICABLE CODE STANDARDS AND REQUIREMENTS AND OF INDUSTRY ACCEPTED STANDARD GOOD PRACTICE. AS NOT EVERY CONDITION OR ELEMENT IS (OR CAN BE) EXPLICITLY SHOWN ON THESE DRAWINGS, THE CONTRACTOR SHALL USE INDUSTRY ACCEPTED STANDARD GOOD PRACTICE FOR MISCELLANEOUS WORK NOT EXPLICITLY SHOWN.

3. THESE DRAWINGS REPRESENT THE FINISHED STRUCTURE. THEY DO NOT INDICATE THE MEANS OR METHODS OF CONSTRUCTION. THE CONTRACTOR SHALL BE SOLELY RESPONSIBLE FOR THE CONSTRUCTION MEANS, METHODS, TECHNIQUES, SEQUENCES, AND PROCEDURES. THE CONTRACTOR SHALL PROVIDE ALL MEASURES NECESSARY FOR PROTECTION OF LIFE AND PROPERTY DURING CONSTRUCTION. SUCH MEASURES SHALL INCLUDE, BUT NOT BE LIMITED TO, BRACING, FORMWORK, SHORING, ETC. SITE VISITS BY THE ENGINEER OR HIS REPRESENTATIVE WILL NOT INCLUDE INSPECTION OF THESE ITEMS AND IS FOR STRUCTURAL OBSERVATION OF THE FINISHED STRUCTURE ONLY.

4. NOTES AND DETAILS IN THE CONSTRUCTION DRAWINGS SHALL TAKE PRECEDENCE OVER GENERAL NOTES AND TYPICAL DETAILS. WHERE NO DETAILS ARE SHOWN, CONSTRUCTION SHALL CONFORM TO SIMILAR WORK ON THE PROJECT, AND/OR AS PROVIDED FOR IN THE CONTRACT DOCUMENTS. WHERE DISCREPANCIES OCCUR BETWEEN PLANS, DETAILS, GENERAL NOTES, AND SPECIFICATIONS, THE GREATER, MORE STRICT REQUIREMENTS, SHALL GOVERN. IF FURTHER CLARIFICATION IS REQUIRED CONTACT THE ENGINEER OF RECORD.

5. SUBSTANTIAL EFFORT HAS BEEN MADE TO PROVIDE ACCURATE DIMENSIONS AND MEASUREMENTS ON THE DRAWINGS TO ASSIST IN THE FABRICATION AND/OR PLACEMENT OF CONSTRUCTION ELEMENTS BUT IT IS THE SOLE RESPONSIBILITY OF THE CONTRACTOR TO FIELD VERIFY THE DIMENSIONS, MEASUREMENTS, AND/OR CLEARANCES SHOWN IN THE CONSTRUCTION DRAWINGS PRIOR TO FABRICATION OR CUTTING OF ANY NEW OR EXISTING CONSTRUCTION ELEMENTS. IF IT IS DETERMINED THAT THERE ARE DISCREPANCIES AND/OR CONFLICTS WITH THE CONSTRUCTION DRAWINGS THE ENGINEER OF RECORD IS TO BE NOTIFIED AS SOON AS POSSIBLE.

6. PRIOR TO THE SUBMISSION OF BIDS, THE BIDDING CONTRACTOR SHALL VISIT THE CELL SITE TO FAMILIARIZE WITH THE EXISTING CONDITIONS AND TO CONFIRM THAT THE WORK CAN BE ACCOMPLISHED AS SHOWN ON THE CONSTRUCTION DRAWINGS. ANY DISCREPANCY FOUND SHALL BE BROUGHT TO THE ATTENTION OF CARRIER POC AND TOWER OWNER.

7. ALL MATERIALS FURNISHED AND INSTALLED SHALL BE IN STRICT ACCORDANCE WITH ALL APPLICABLE CODES, REGULATIONS AND ORDINANCES. CONTRACTOR SHALL ISSUE ALL APPROPRIATE NOTICES AND COMPLY WITH ALL LAWS, ORDINANCES, RULES, REGULATIONS AND LAWFUL ORDERS OF ANY PUBLIC AUTHORITY REGARDING THE PERFORMANCE OF THE WORK. ALL WORK CARRIED OUT SHALL COMPLY WITH ALL APPLICABLE MUNICIPAL AND UTILITY COMPANY SPECIFICATIONS AND LOCAL JURISDICTIONAL CODES, ORDINANCES AND APPLICABLE REGULATIONS.

8. UNLESS NOTED OTHERWISE, THE WORK SHALL INCLUDE FURNISHING MATERIALS, EQUIPMENT, APPURTENANCES AND LABOR NECESSARY TO COMPLETE ALL INSTALLATIONS AS INDICATED ON THE DRAWINGS.

9. THE CONTRACTOR SHALL INSTALL ALL EQUIPMENT AND MATERIALS IN ACCORDANCE WITH MANUFACTURER'S RECOMMENDATIONS UNLESS SPECIFICALLY STATED OTHERWISE.

10. IF THE SPECIFIED EQUIPMENT CAN NOT BE INSTALLED AS SHOWN ON THESE DRAWINGS, THE CONTRACTOR SHALL PROPOSE AN ALTERNATIVE INSTALLATION FOR APPROVAL BY THE CARRIER AND TOWER OWNER PRIOR TO PROCEEDING WITH ANY SUCH CHANGE OF INSTALLATION.

11. CONTRACTOR IS TO PERFORM A SITE INVESTIGATION, BEFORE SUBMITTING BIDS, TO DETERMINE THE BEST ROUTING OF ALL CONDUITS FOR POWER, AND TELCO AND FOR GROUNDING CABLES AS SHOWN IN THE POWER, TELCO, AND GROUNDING PLAN DRAWINGS.

12. THE CONTRACTOR SHALL PROTECT EXISTING IMPROVEMENTS, PAVEMENTS, CURBS, LANDSCAPING AND STRUCTURES. ANY DAMAGED PART SHALL BE REPAIRED AT CONTRACTOR'S EXPENSE TO THE SATISFACTION OF DISH Wireless L.L.C. AND TOWER OWNER

13. CONTRACTOR SHALL LEGALLY AND PROPERLY DISPOSE OF ALL SCRAP MATERIALS SUCH AS COAXIAL CABLES AND OTHER ITEMS REMOVED FROM THE EXISTING FACILITY. ANTENNAS REMOVED SHALL BE RETURNED TO THE OWNER'S DESIGNATED LOCATION.

14. CONTRACTOR SHALL LEAVE PREMISES IN CLEAN CONDITION. TRASH AND DEBRIS SHOULD BE REMOVED FROM SITE ON A DAILY BASIS.


dish wireless.

5701 SOUTH SANTA FE DRIVE
LITTLETON, CO 80120

NB+C TOTALLY COMMITTED

NB+C ENGINEERING SERVICES, LLC.

100 APOLLO DRIVE
SUITE 303
CHELMSFORD, MA 01824
(978) 856-8308

IT IS A VIOLATION OF LAW FOR ANY PERSON, UNLESS THEY ARE ACTING UNDER THE DIRECTION OF A LICENSED PROFESSIONAL ENGINEER, TO ALTER THIS DOCUMENT.


| DRAWN BY: | CHECKED BY: | APPROVED BY: |
|---|---|---|
| CSG | NSB | DRG |

RFDS REV #: 1

CONSTRUCTION DOCUMENTS

SUBMITTALS

| REV | DATE | DESCRIPTION |
|---|---|---|
| 0 | 07/28/2023 | ISSUED FOR REVIEW |
| 1 | 08/30/2023 | BILL OF MATERIALS |

A&E PROJECT NUMBER

100753

DISH Wireless L.L.C.
PROJECT INFORMATION

BOBOS01058A

460 HILLSIDE AVENUE
NEEDHAM MA, 02494

SHEET TITLE

GENERAL NOTES

SHEET NUMBER

GN-3

CONCRETE, FOUNDATIONS, AND REINFORCING STEEL:

1. ALL CONCRETE WORK SHALL BE IN ACCORDANCE WITH THE ACI 301, ACI 318, ACI 336, ASTM A184, ASTM A185 AND THE DESIGN AND CONSTRUCTION SPECIFICATION FOR CAST–IN–PLACE CONCRETE.

2. UNLESS NOTED OTHERWISE, SOIL BEARING PRESSURE USED FOR DESIGN OF SLABS AND FOUNDATIONS IS ASSUMED TO BE 1000 psf.

3. ALL CONCRETE SHALL HAVE A MINIMUM COMPRESSIVE STRENGTH (f'c) OF 3000 psi AT 28 DAYS, UNLESS NOTED OTHERWISE. NO MORE THAN 90 MINUTES SHALL ELAPSE FROM BATCH TIME TO TIME OF PLACEMENT UNLESS APPROVED BY THE ENGINEER OF RECORD. TEMPERATURE OF CONCRETE SHALL NOT EXCEED 90°f AT TIME OF PLACEMENT.

4. CONCRETE EXPOSED TO FREEZE–THAW CYCLES SHALL CONTAIN AIR ENTRAINING ADMIXTURES. AMOUNT OF AIR ENTRAINMENT TO BE BASED ON SIZE OF AGGREGATE AND F3 CLASS EXPOSURE (VERY SEVERE). CEMENT USED TO BE TYPE II PORTLAND CEMENT WITH A MAXIMUM WATER–TO–CEMENT RATIO (W/C) OF 0.45.

5. ALL STEEL REINFORCING SHALL CONFORM TO ASTM A615. ALL WELDED WIRE FABRIC (WWF) SHALL CONFORM TO ASTM A185. ALL SPLICES SHALL BE CLASS "B" TENSION SPLICES, UNLESS NOTED OTHERWISE. ALL HOOKS SHALL BE STANDARD 90 DEGREE HOOKS, UNLESS NOTED OTHERWISE. YIELD STRENGTH (Fy) OF STANDARD DEFORMED BARS ARE AS FOLLOWS:

#4 BARS AND SMALLER 40 ksi

#5 BARS AND LARGER 60 ksi

6. THE FOLLOWING MINIMUM CONCRETE COVER SHALL BE PROVIDED FOR REINFORCING STEEL UNLESS SHOWN OTHERWISE ON DRAWINGS:

- CONCRETE CAST AGAINST AND PERMANENTLY EXPOSED TO EARTH 3"
- CONCRETE EXPOSED TO EARTH OR WEATHER:
- #6 BARS AND LARGER 2"
- #5 BARS AND SMALLER 1–1/2"
- CONCRETE NOT EXPOSED TO EARTH OR WEATHER:
- SLAB AND WALLS 3/4"
- BEAMS AND COLUMNS 1–1/2"

7. A TOOLED EDGE OR A 3/4" CHAMFER SHALL BE PROVIDED AT ALL EXPOSED EDGES OF CONCRETE, UNLESS NOTED OTHERWISE, IN ACCORDANCE WITH ACI 301 SECTION 4.2.4.

ELECTRICAL INSTALLATION NOTES:

1. ALL ELECTRICAL WORK SHALL BE PERFORMED IN ACCORDANCE WITH THE PROJECT SPECIFICATIONS, NEC AND ALL APPLICABLE FEDERAL, STATE, AND LOCAL CODES/ORDINANCES.

2. CONDUIT ROUTINGS ARE SCHEMATIC. CONTRACTOR SHALL INSTALL CONDUITS SO THAT ACCESS TO EQUIPMENT IS NOT BLOCKED AND TRIP HAZARDS ARE ELIMINATED.

3. WIRING, RACEWAY AND SUPPORT METHODS AND MATERIALS SHALL COMPLY WITH THE REQUIREMENTS OF THE NEC.

4. ALL CIRCUITS SHALL BE SEGREGATED AND MAINTAIN MINIMUM CABLE SEPARATION AS REQUIRED BY THE NEC.

4.1. ALL EQUIPMENT SHALL BEAR THE UNDERWRITERS LABORATORIES LABEL OF APPROVAL, AND SHALL CONFORM TO REQUIREMENT OF THE NATIONAL ELECTRICAL CODE.

4.2. ALL OVERCURRENT DEVICES SHALL HAVE AN INTERRUPTING CURRENT RATING THAT SHALL BE GREATER THAN THE SHORT CIRCUIT CURRENT TO WHICH THEY ARE SUBJECTED, 22,000 AIC MINIMUM. VERIFY AVAILABLE SHORT CIRCUIT CURRENT DOES NOT EXCEED THE RATING OF ELECTRICAL EQUIPMENT IN ACCORDANCE WITH ARTICLE 110.24 NEC OR THE MOST CURRENT ADOPTED CODE PRE THE GOVERNING JURISDICTION.

5. EACH END OF EVERY POWER PHASE CONDUCTOR, GROUNDING CONDUCTOR, AND TELCO CONDUCTOR OR CABLE SHALL BE LABELED WITH COLOR–CODED INSULATION OR ELECTRICAL TAPE (3M BRAND, 1/2" PLASTIC ELECTRICAL TAPE WITH UV PROTECTION, OR EQUAL). THE IDENTIFICATION METHOD SHALL CONFORM WITH NEC AND OSHA.

6. ALL ELECTRICAL COMPONENTS SHALL BE CLEARLY LABELED WITH LAMICOID TAGS SHOWING THEIR RATED VOLTAGE, PHASE CONFIGURATION, WIRE CONFIGURATION, POWER OR AMPACITY RATING AND BRANCH CIRCUIT ID NUMBERS (i.e. PANEL BOARD AND CIRCUIT ID'S).

7. PANEL BOARDS (ID NUMBERS) SHALL BE CLEARLY LABELED WITH PLASTIC LABELS.

8. TIE WRAPS ARE NOT ALLOWED.

9. ALL POWER AND EQUIPMENT GROUND WIRING IN TUBING OR CONDUIT SHALL BE SINGLE COPPER CONDUCTOR (#14 OR LARGER) WITH TYPE THHW, THWN, THWN–2, XHHW, XHHW–2, THW, THW–2, RHW, OR RHW–2 INSULATION UNLESS OTHERWISE SPECIFIED.

10. SUPPLEMENTAL EQUIPMENT GROUND WIRING LOCATED INDOORS SHALL BE SINGLE COPPER CONDUCTOR (#6 OR LARGER) WITH TYPE THHW, THWN, THWN–2, XHHW, XHHW–2, THW, THW–2, RHW, OR RHW–2 INSULATION UNLESS OTHERWISE SPECIFIED.

11. POWER AND CONTROL WIRING IN FLEXIBLE CORD SHALL BE MULTI–CONDUCTOR, TYPE SOOW CORD (#14 OR LARGER) UNLESS OTHERWISE SPECIFIED.

12. POWER AND CONTROL WIRING FOR USE IN CABLE TRAY SHALL BE MULTI–CONDUCTOR, TYPE TC CABLE (#14 OR LARGER), WITH TYPE THHW, THWN, THWN–2, XHHW, XHHW–2, THW, THW–2, RHW, OR RHW–2 INSULATION UNLESS OTHERWISE SPECIFIED.

13. ALL POWER AND GROUNDING CONNECTIONS SHALL BE CRIMP–STYLE, COMPRESSION WIRE LUGS AND WIRE NUTS BY THOMAS AND BETTS (OR EQUAL). LUGS AND WIRE NUTS SHALL BE RATED FOR OPERATION NOT LESS THAN 75° C (90° C IF AVAILABLE).

14. RACEWAY AND CABLE TRAY SHALL BE LISTED OR LABELED FOR ELECTRICAL USE IN ACCORDANCE WITH NEMA, UL, ANSI/IEEE AND NEC.

15. ELECTRICAL METALLIC TUBING (EMT), INTERMEDIATE METAL CONDUIT (IMC), OR RIGID METAL CONDUIT (RMC) SHALL BE USED FOR EXPOSED INDOOR LOCATIONS.

16. ELECTRICAL METALLIC TUBING (EMT) OR METAL–CLAD CABLE (MC) SHALL BE USED FOR CONCEALED INDOOR LOCATIONS.

17. SCHEDULE 40 PVC UNDERGROUND ON STRAIGHTS AND SCHEDULE 80 PVC FOR ALL ELBOWS/90s AND ALL APPROVED ABOVE GRADE PVC CONDUIT.

18. LIQUID–TIGHT FLEXIBLE METALLIC CONDUIT (LIQUID–TITE FLEX) SHALL BE USED INDOORS AND OUTDOORS, WHERE VIBRATION OCCURS OR FLEXIBILITY IS NEEDED.

19. CONDUIT AND TUBING FITTINGS SHALL BE THREADED OR COMPRESSION–TYPE AND APPROVED FOR THE LOCATION USED. SET SCREW FITTINGS ARE NOT ACCEPTABLE.

20. CABINETS, BOXES AND WIRE WAYS SHALL BE LABELED FOR ELECTRICAL USE IN ACCORDANCE WITH NEMA, UL, ANSI/IEEE AND THE NEC.

21. WIREWAYS SHALL BE METAL WITH AN ENAMEL FINISH AND INCLUDE A HINGED COVER, DESIGNED TO SWING OPEN DOWNWARDS (WIREMOLD SPECMATE WIREWAY).

22. SLOTTED WIRING DUCT SHALL BE PVC AND INCLUDE COVER (PANDUIT TYPE E OR EQUAL).

23. CONDUITS SHALL BE FASTENED SECURELY IN PLACE WITH APPROVED NON–PERFORATED STRAPS AND HANGERS. EXPLOSIVE DEVICES (i.e. POWDER–ACTUATED) FOR ATTACHING HANGERS TO STRUCTURE WILL NOT BE PERMITTED. CLOSELY FOLLOW THE LINES OF THE STRUCTURE, MAINTAIN CLOSE PROXIMITY TO THE STRUCTURE AND KEEP CONDUITS IN TIGHT ENVELOPES. CHANGES IN DIRECTION TO ROUTE AROUND OBSTACLES SHALL BE MADE WITH CONDUIT OUTLET BODIES. CONDUIT SHALL BE INSTALLED IN A NEAT AND WORKMANLIKE MANNER. PARALLEL AND PERPENDICULAR TO STRUCTURE WALL AND CEILING LINES. ALL CONDUIT SHALL BE FISHED TO CLEAR OBSTRUCTIONS. ENDS OF CONDUITS SHALL BE TEMPORARILY CAPPED FLUSH TO FINISH GRADE TO PREVENT CONCRETE, PLASTER OR DIRT FROM ENTERING. CONDUITS SHALL BE RIGIDLY CLAMPED TO BOXES BY GALVANIZED MALLEABLE IRON BUSHING ON INSIDE AND GALVANIZED MALLEABLE IRON LOCKNUT ON OUTSIDE AND INSIDE.

24. EQUIPMENT CABINETS, TERMINAL BOXES, JUNCTION BOXES AND PULL BOXES SHALL BE GALVANIZED OR EPOXY–COATED SHEET STEEL. SHALL MEET OR EXCEED UL 50 AND BE RATED NEMA 1 (OR BETTER) FOR INTERIOR LOCATIONS AND NEMA 3 (OR BETTER) FOR EXTERIOR LOCATIONS.

25. METAL RECEPTACLE, SWITCH AND DEVICE BOXES SHALL BE GALVANIZED, EPOXY–COATED OR NON–CORRODING; SHALL MEET OR EXCEED UL 514A AND NEMA OS 1 AND BE RATED NEMA 1 (OR BETTER) FOR INTERIOR LOCATIONS AND WEATHER PROTECTED (WP OR BETTER) FOR EXTERIOR LOCATIONS.

26. NONMETALLIC RECEPTACLE, SWITCH AND DEVICE BOXES SHALL MEET OR EXCEED NEMA OS 2 (NEWEST REVISION) AND BE RATED NEMA 1 (OR BETTER) FOR INTERIOR LOCATIONS AND WEATHER PROTECTED (WP OR BETTER) FOR EXTERIOR LOCATIONS.

27. THE CONTRACTOR SHALL NOTIFY AND OBTAIN NECESSARY AUTHORIZATION FROM THE CARRIER AND/OR DISH Wireless L.L.C. AND TOWER OWNER BEFORE COMMENCING WORK ON THE AC POWER DISTRIBUTION PANELS.

28. THE CONTRACTOR SHALL PROVIDE NECESSARY TAGGING ON THE BREAKERS, CABLES AND DISTRIBUTION PANELS IN ACCORDANCE WITH THE APPLICABLE CODES AND STANDARDS TO SAFEGUARD LIFE AND PROPERTY.

29. INSTALL LAMICOID LABEL ON THE METER CENTER TO SHOW "DISH Wireless L.L.C.".

30. ALL EMPTY/SPARE CONDUITS THAT ARE INSTALLED ARE TO HAVE A METERED MULE TAPE PULL CORD INSTALLED.


dish wireless.

5701 SOUTH SANTA FE DRIVE
LITTLETON, CO 80120

NB+C TOTALLY COMMITTED

NB+C ENGINEERING SERVICES, LLC.

100 APOLLO DRIVE
SUITE 303
CHELMSFORD, MA 01824
(978) 856-8308

IT IS A VIOLATION OF LAW FOR ANY PERSON, UNLESS THEY ARE ACTING UNDER THE DIRECTION OF A LICENSED PROFESSIONAL ENGINEER, TO ALTER THIS DOCUMENT.


| DRAWN BY: | CHECKED BY: | APPROVED BY: |
|---|---|---|
| CSG | NSB | DRG |

RFDS REV #: 1

CONSTRUCTION DOCUMENTS

SUBMITTALS

| REV | DATE | DESCRIPTION |
|---|---|---|
| 0 | 07/28/2023 | ISSUED FOR REVIEW |
| 1 | 08/30/2023 | BILL OF MATERIALS |

A&E PROJECT NUMBER

100753

DISH Wireless L.L.C.
PROJECT INFORMATION

BOBOS01058A

460 HILLSIDE AVENUE
NEEDHAM MA, 02494

SHEET TITLE

GENERAL NOTES

SHEET NUMBER

GN-4

GROUNDING NOTES:

1. ALL GROUND ELECTRODE SYSTEMS (INCLUDING TELECOMMUNICATION, RADIO, LIGHTNING PROTECTION AND AC POWER GES'S) SHALL BE BONDED TOGETHER AT OR BELOW GRADE, BY TWO OR MORE COPPER BONDING CONDUCTORS IN ACCORDANCE WITH THE NEC.

2. THE CONTRACTOR SHALL PERFORM IEEE FALL-OF-POTENTIAL RESISTANCE TO EARTH TESTING (PER IEEE 1100 AND 81) FOR GROUND ELECTRODE SYSTEMS, THE CONTRACTOR SHALL FURNISH AND INSTALL SUPPLEMENTAL GROUND ELECTRODES AS NEEDED TO ACHIEVE A TEST RESULT OF 5 OHMS OR LESS.

3. THE CONTRACTOR IS RESPONSIBLE FOR PROPERLY SEQUENCING GROUNDING AND UNDERGROUND CONDUIT INSTALLATION AS TO PREVENT ANY LOSS OF CONTINUITY IN THE GROUNDING SYSTEM OR DAMAGE TO THE CONDUIT AND PROVIDE TESTING RESULTS.

4. METAL CONDUIT AND TRAY SHALL BE GROUNDED AND MADE ELECTRICALLY CONTINUOUS WITH LISTED BONDING FITTINGS OR BY BONDING ACROSS THE DISCONTINUITY WITH #6 COPPER WIRE UL APPROVED GROUNDING TYPE CONDUIT CLAMPS.

5. METAL RACEWAY SHALL NOT BE USED AS THE NEC REQUIRED EQUIPMENT GROUND CONDUCTOR. STRANDED COPPER CONDUCTORS WITH GREEN INSULATION, SIZED IN ACCORDANCE WITH THE NEC, SHALL BE FURNISHED AND INSTALLED WITH THE POWER CIRCUITS TO BTS EQUIPMENT.

6. EACH CABINET FRAME SHALL BE DIRECTLY CONNECTED TO THE MASTER GROUND BAR WITH GREEN INSULATED SUPPLEMENTAL EQUIPMENT GROUND WIRES, #6 STRANDED COPPER OR LARGER FOR INDOOR BTS; #2 BARE SOLID TINNED COPPER FOR OUTDOOR BTS.

7. CONNECTIONS TO THE GROUND BUS SHALL NOT BE DOUBLED UP OR STACKED BACK TO BACK CONNECTIONS ON OPPOSITE SIDE OF THE GROUND BUS ARE PERMITTED.

8. ALL EXTERIOR GROUND CONDUCTORS BETWEEN EQUIPMENT/GROUND BARS AND THE GROUND RING SHALL BE #2 SOLID TINNED COPPER UNLESS OTHERWISE INDICATED.

9. ALUMINUM CONDUCTOR OR COPPER CLAD STEEL CONDUCTOR SHALL NOT BE USED FOR GROUNDING CONNECTIONS.

10. USE OF 90° BENDS IN THE PROTECTION GROUNDING CONDUCTORS SHALL BE AVOIDED WHEN 45° BENDS CAN BE ADEQUATELY SUPPORTED.

11. EXOTHERMIC WELDS SHALL BE USED FOR ALL GROUNDING CONNECTIONS BELOW GRADE.

12. ALL GROUND CONNECTIONS ABOVE GRADE (INTERIOR AND EXTERIOR) SHALL BE FORMED USING HIGH PRESS CRIMPS.

13. COMPRESSION GROUND CONNECTIONS MAY BE REPLACED BY EXOTHERMIC WELD CONNECTIONS.

14. ICE BRIDGE BONDING CONDUCTORS SHALL BE EXOTHERMICALLY BONDED OR BOLTED TO THE BRIDGE AND THE TOWER GROUND BAR.

15. APPROVED ANTIOXIDANT COATINGS (i.e. CONDUCTIVE GEL OR PASTE) SHALL BE USED ON ALL COMPRESSION AND BOLTED GROUND CONNECTIONS.

16. ALL EXTERIOR GROUND CONNECTIONS SHALL BE COATED WITH A CORROSION RESISTANT MATERIAL.

17. MISCELLANEOUS ELECTRICAL AND NON-ELECTRICAL METAL BOXES, FRAMES AND SUPPORTS SHALL BE BONDED TO THE GROUND RING, IN ACCORDANCE WITH THE NEC.

18. BOND ALL METALLIC OBJECTS WITHIN 6 ft OF MAIN GROUND RING WITH (1) #2 BARE SOLID TINNED COPPER GROUND CONDUCTOR.

19. GROUND CONDUCTORS USED FOR THE FACILITY GROUNDING AND LIGHTNING PROTECTION SYSTEMS SHALL NOT BE ROUTED THROUGH METALLIC OBJECTS THAT FORM A RING AROUND THE CONDUCTOR, SUCH AS METALLIC CONDUITS, METAL SUPPORT CLIPS OR SLEEVES THROUGH WALLS OR FLOORS. WHEN IT IS REQUIRED TO BE HOUSED IN CONDUIT TO MEET CODE REQUIREMENTS OR LOCAL CONDITIONS, NON-METALLIC MATERIAL SUCH AS PVC CONDUIT SHALL BE USED. WHERE USE OF METAL CONDUIT IS UNAVOIDABLE (i.e., NONMETALLIC CONDUIT PROHIBITED BY LOCAL CODE) THE GROUND CONDUCTOR SHALL BE BONDED TO EACH END OF THE METAL CONDUIT.

20. ALL GROUNDS THAT TRANSITION FROM BELOW GRADE TO ABOVE GRADE MUST BE #2 BARE SOLID TINNED COPPER IN 3/4" NON-METALLIC, FLEXIBLE CONDUIT FROM 24" BELOW GRADE TO WITHIN 3" TO 6" OF CAD-WELD TERMINATION POINT. THE EXPOSED END OF THE CONDUIT MUST BE SEALED WITH SILICONE CAULK. (ADD TRANSITIONING GROUND STANDARD DETAIL AS WELL).

21. BUILDINGS WHERE THE MAIN GROUNDING CONDUCTORS ARE REQUIRED TO BE ROUTED TO GRADE, THE CONTRACTOR SHALL ROUTE TWO GROUNDING CONDUCTORS FROM THE ROOFTOP, TOWERS, AND WATER TOWERS GROUNDING RING, TO THE EXISTING GROUNDING SYSTEM, THE GROUNDING CONDUCTORS SHALL NOT BE SMALLER THAN 2/0 COPPER. ROOFTOP GROUNDING RING SHALL BE BONDED TO THE EXISTING GROUNDING SYSTEM, THE BUILDING STEEL COLUMNS, LIGHTNING PROTECTION SYSTEM, AND BUILDING MAIN WATER LINE (FERROUS OR NONFERROUS METAL PIPING ONLY). DO NOT ATTACH GROUNDING TO FIRE SPRINKLER SYSTEM PIPES.


dish wireless.

5701 SOUTH SANTA FE DRIVE
LITTLETON, CO 80120

NB+C TOTALLY COMMITTED

NB+C ENGINEERING SERVICES, LLC.

100 APOLLO DRIVE
SUITE 303
CHELMSFORD, MA 01824
(978) 856-8308


COMMONWEALTH OF MASSACHUSETTS
KRUPAKAR KOLLEPARA
NO. 50019
REGISTERED PROFESSIONAL ENGINEER


IT IS A VIOLATION OF LAW FOR ANY PERSON, UNLESS THEY ARE ACTING UNDER THE DIRECTION OF A LICENSED PROFESSIONAL ENGINEER, TO ALTER THIS DOCUMENT.


| DRAWN BY: | CHECKED BY: | APPROVED BY: |
|---|---|---|
| CSG | NSB | DRG |

RFDS REV #: 1

CONSTRUCTION DOCUMENTS

SUBMITTALS

| REV | DATE | DESCRIPTION |
|---|---|---|
| 0 | 07/28/2023 | ISSUED FOR REVIEW |
| 1 | 08/30/2023 | BILL OF MATERIALS |

A&E PROJECT NUMBER

100753

DISH Wireless L.L.C.
PROJECT INFORMATION

BOBOS01058A

460 HILLSIDE AVENUE
NEEDHAM MA, 02494

SHEET TITLE

GENERAL NOTES

SHEET NUMBER

GN-5

# PMI CHECKLIST

| CONSTRUCTION/INSTALLATION INSPECTIONS AND TESTING REQUIRED | REPORT ITEM |
|---|---|
| **PRE-CONSTRUCTION** | |
| X | PMI CHECKLIST DRAWING |
| N/A | EOR APPROVED SHOP DRAWINGS |
| N/A | FABRICATION INSPECTION |
| N/A | FABRICATOR CERTIFIED WELD INSPECTION |
| N/A | MATERIAL TEST REPORT (MTR) |
| N/A | FABRICATOR NDE INSPECTION |
| N/A | NDE REPORT OF MONOPOLE BASE PLATE (AS REQUIRED) |
| X | PACKING SLIPS |
| ADDITIONAL TESTING AND INSPECTIONS: | |
| | |
| **CONSTRUCTION** | |
| X | CONSTRUCTION INSPECTIONS |
| N/A | FOUNDATION INSPECTIONS |
| N/A | CONCRETE COMP. STRENGTH AND SLUMP TESTS |
| N/A | POST INSTALLED ANCHOR ROD VERIFICATION |
| N/A | BASE PLATE GROUT VERIFICATION |
| N/A | CONTRACTOR'S CERTIFIED WELD INSPECTION |
| N/A | EARTHWORK: LIFT AND DENSITY |
| N/A | ON SITE COLD GALVANIZING VERIFICATION |
| N/A | GUY WIRE TENSION REPORT |
| X | GC AS-BUILT DOCUMENTS |
| ADDITIONAL TESTING AND INSPECTIONS: | |
| | |
| **POST-CONSTRUCTION** | |
| X | PMI INSPECTOR REDLINE OR RECORD DRAWING(S) |
| N/A | POST INSTALLED ANCHOR ROD PULL-OUT TESTING |
| X | PHOTOGRAPHS |
| ADDITIONAL TESTING AND INSPECTIONS: | |
| | |

NOTE: X DENOTES A DOCUMENT NEEDED FOR THE PMI REPORT
N/A DENOTES A DOCUMENT THAT IS NOT REQUIRED FOR THE PMI REPORT

# POST MODIFICATION INSPECTION NOTES:

## GENERAL

1. THE POST MODIFICATION INSPECTION (PMI) IS A VISUAL INSPECTION OF TOWER MODIFICATIONS AND A REVIEW OF CONSTRUCTION INSPECTIONS AND OTHER REPORTS TO ENSURE THE INSTALLATION WAS CONSTRUCTED IN ACCORDANCE WITH THE CONTRACT DOCUMENTS, NAMELY THE MODIFICATION DRAWINGS, AS DESIGNED BY THE ENGINEER OF RECORD (EOR).
2. THE PMI IS TO CONFIRM INSTALLATION CONFIGURATION AND WORKMANSHIP ONLY AND IS NOT A REVIEW OF THE MODIFICATION DESIGN ITSELF, NOR DOES THE PMI INSPECTOR TAKE OWNERSHIP OF THE MODIFICATION DESIGN. OWNERSHIP OF THE STRUCTURAL MODIFICATION DESIGN EFFECTIVENESS AND INTEGRITY RESIDES WITH THE EOR AT ALL TIMES.
3. ALL PMI'S SHALL BE CONDUCTED BY A PMI INSPECTOR THAT IS APPROVED TO PERFORM ELEVATED WORK FOR NB+C ENGINEERING SERVICES, LLC.
4. TO ENSURE THAT THE REQUIREMENTS OF THE PMI ARE MET, IT IS VITAL THAT THE GENERAL CONTRACTOR (GC) AND THE PMI INSPECTOR BEGIN COMMUNICATING AND COORDINATING AS SOON AS A PO IS RECEIVED. IT IS EXPECTED THAT EACH PARTY WILL BE PROACTIVE IN REACHING OUT TO THE OTHER PARTY. IF CONTACT INFORMATION IS NOT KNOWN, CONTACT YOUR NB+C POINT OF CONTACT (POC).
5. REFER TO CCR-01 : CONTRACTOR CLOSEOUT REQUIREMENTS FOR FURTHER DETAILS AND REQUIREMENTS.

## CORRECTION OF FAILING PMI'S

1. IF THE MODIFICATION INSTALLATION WOULD FAIL THE PMI ("FAILED PMI"), THE GC SHALL WORK WITH THE ENGINEER OF RECORD TO COORDINATE A REMEDIATION PLAN IN ONE OF TWO WAYS:
   - CORRECT FAILING ISSUES TO COMPLY WITH THE SPECIFICATIONS CONTAINED IN THE ORIGINAL CONTRACT DOCUMENTS AND COORDINATE A SUPPLEMENT PMI.
   - OR, WITH EOR'S APPROVAL, THE GC MAY WORK WITH THE EOR TO RE-ANALYZE THE MODIFICATION/REINFORCEMENT USING THE AS-BUILT CONDITION.

## REQUIRED PHOTOS

1. THE GENERAL CONTRACTOR IS REQUIRED TO PROVIDE THE FOLLOWING PHOTOGRAPHS AT A MINIMUM:
   - PRE-CONSTRUCTION GENERAL SITE CONDITION
   - SITE PLACARD WITH DISH SITE NAME
   - PHOTOGRAPHS DURING THE REINFORCEMENT MODIFICATION CONSTRUCTION/ERECTION AND INSPECTION
     - RAW MATERIALS
     - PHOTOS OF ALL CRITICAL DETAILS
     - BOLT INSTALLATION AND TORQUE
     - FINAL INSTALLED CONDITION
     - PHOTOS SHALL HAVE MEASURING TAPES AND CALIPERS TO CONFIRM ALL DIMENSIONS RELATED TO THE MODIFICATION
     - PHOTOS SHALL IDENTIFY THE SECTOR AND MOUNT POSITION
   - POST CONSTRUCTION PHOTOGRAPHS
     - FINAL INFIELD CONDITION
2. PHOTOS OF ELEVATED MODIFICATIONS TAKEN FROM THE GROUND SHALL BE CONSIDERED INADEQUATE.
3. CONTRACTOR IS RESPONSIBLE FOR ENSURING THAT THE PHOTOGRAPHS CONFIRM THE MOUNT MODIFICATION WAS COMPLETED PER THESE DRAWINGS, TO INCLUDE ALL DIMENSIONS AND CONNECTIONS OF MOUNT MEMBERS AND CONNECTIONS TO THE SUPPORTING STRUCTURE.
4. CONTRACTOR SHALL NOTIFY THE EOR OF ANY ISSUES THAT MAY AFFECT THE PERFORMANCE OF THE MOUNT, INCLUDING SAFETY ISSUES, VARIANCES IN LOADING CONDITIONS FROM THE CONSTRUCTION DRAWINGS, ETC.
5. AS-BUILT CD RED LINES SHALL INCLUDE CONTRACTOR'S NAME, PREPARER'S SIGNATURE, AND DATE.


dish wireless.

5701 SOUTH SANTA FE DRIVE
LITTLETON, CO 80120

NB+C TOTALLY COMMITTED

NB+C ENGINEERING SERVICES, LLC.

100 APOLLO DRIVE
SUITE 303
CHELMSFORD, MA 01824
(978) 856-8308


COMMONWEALTH OF MASSACHUSETTS
KRUPAKAR KOLLEPARA
NO. 50019
REGISTERED PROFESSIONAL ENGINEER


IT IS A VIOLATION OF LAW FOR ANY PERSON, UNLESS THEY ARE ACTING UNDER THE DIRECTION OF A LICENSED PROFESSIONAL ENGINEER, TO ALTER THIS DOCUMENT.


| DRAWN BY: | CHECKED BY: | APPROVED BY: |
|---|---|---|
| CSG | NSB | DRG |

RFDS REV #: 1

CONSTRUCTION DOCUMENTS

SUBMITTALS

| REV | DATE | DESCRIPTION |
|---|---|---|
| 0 | 07/28/2023 | ISSUED FOR REVIEW |
| 1 | 08/30/2023 | BILL OF MATERIALS |

A&E PROJECT NUMBER
100753

DISH Wireless L.L.C.
PROJECT INFORMATION

BOBOS01058A

460 HILLSIDE AVENUE
NEEDHAM MA, 02494

SHEET TITLE
PMI CHECKLIST & NOTES

SHEET NUMBER
GN-6

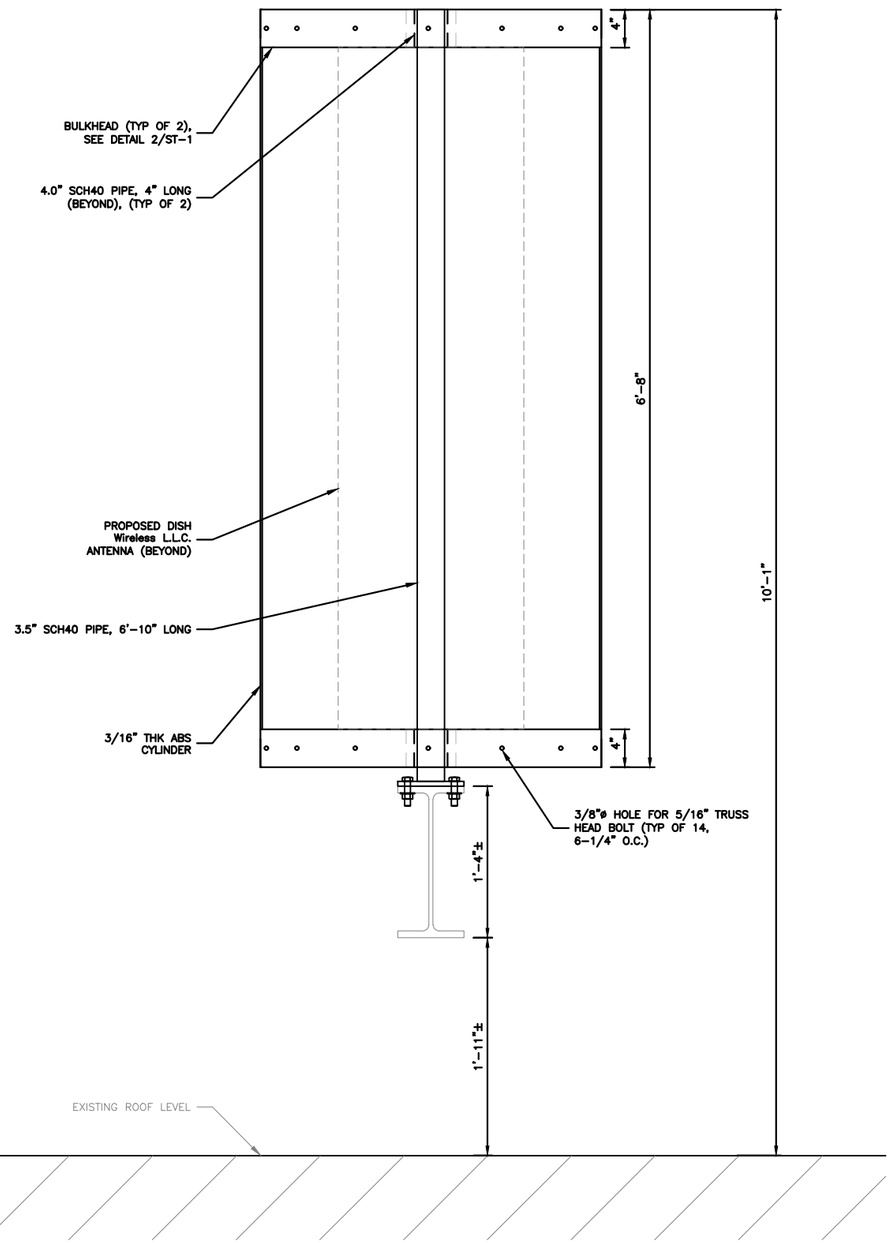


SMALL CANISTER ASSEMBLY DETAIL

12" 9" 6" 3" 0 1'
1 1/2"=1'-0"

1

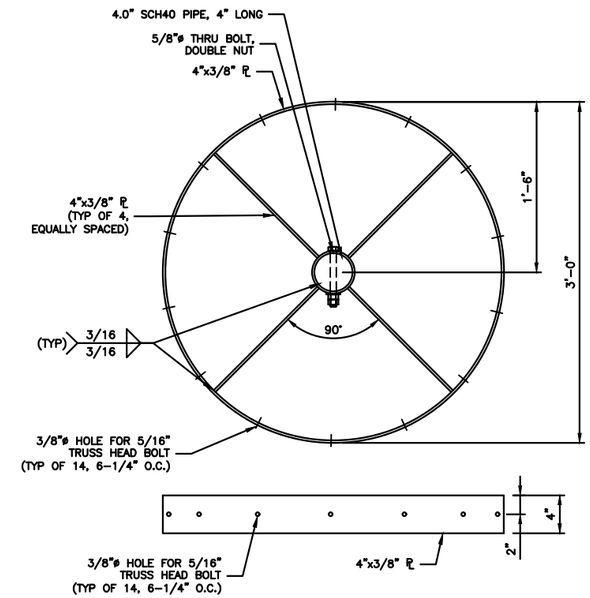


BULKHEAD DETAIL

12" 9" 6" 3" 0 1'
1 1/2"=1'-0"

2

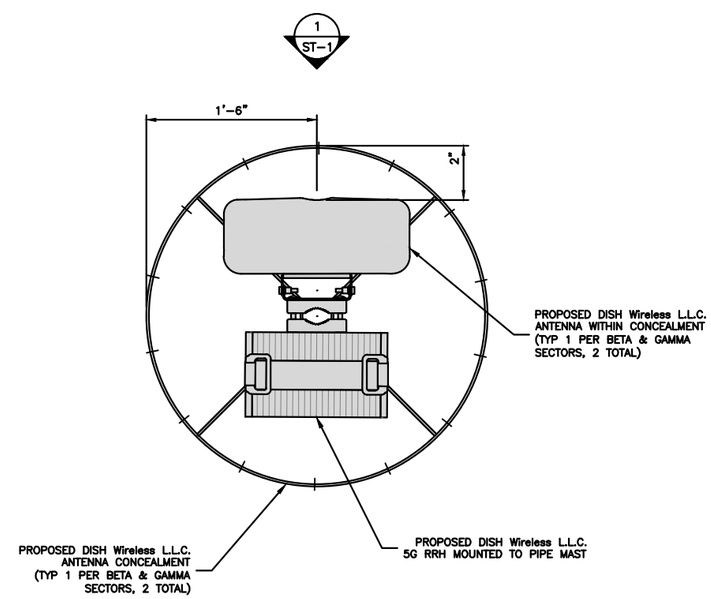


OVERALL CONCEALMENT PLAN

12" 9" 6" 3" 0 1'
1 1/2"=1'-0"

3


dish wireless.

5701 SOUTH SANTA FE DRIVE
LITTLETON, CO 80120

NB+C TOTALLY COMMITTED.

NB+C ENGINEERING SERVICES, LLC.

100 APOLLO DRIVE
SUITE 303
CHELMSFORD, MA 01824
(978) 856-8308


COMMONWEALTH OF MASSACHUSETTS
KRUPAKAR KOLLEPARA
NO. 50019
REGISTERED PROFESSIONAL ENGINEER


IT IS A VIOLATION OF LAW FOR ANY PERSON, UNLESS THEY ARE ACTING UNDER THE DIRECTION OF A LICENSED PROFESSIONAL ENGINEER, TO ALTER THIS DOCUMENT.


| DRAWN BY: | CHECKED BY: | APPROVED BY: |
|---|---|---|
| CSG | NSB | DRG |

RFDS REV #: 1

CONSTRUCTION DOCUMENTS

SUBMITTALS

| REV | DATE | DESCRIPTION |
|---|---|---|
| 0 | 07/28/2023 | ISSUED FOR REVIEW |
| 1 | 08/30/2023 | BILL OF MATERIALS |

A&E PROJECT NUMBER

100753

DISH Wireless L.L.C.
PROJECT INFORMATION

BOBOS01058A

460 HILLSIDE AVENUE
NEEDHAM MA, 02494

SHEET TITLE

CANISTER DETAILS

SHEET NUMBER

ST-1

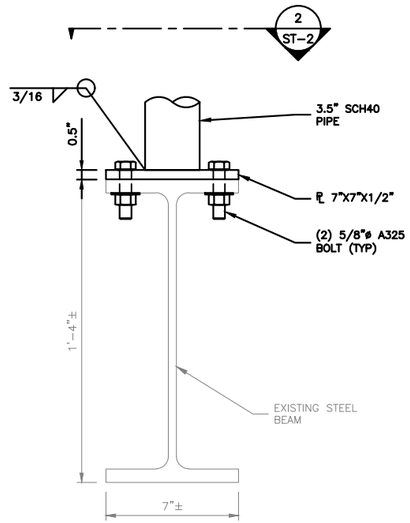


CONNECTION DETAIL

12" 9" 6" 3" 0
3"=1'-0"

1

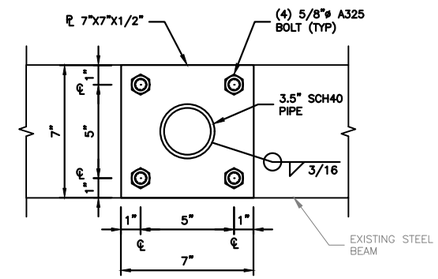


CONNECTION DETAIL

12" 9" 6" 3" 0
3"=1'-0"

2

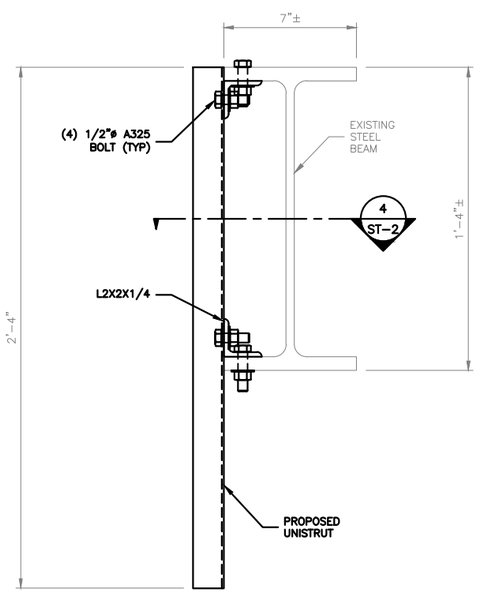


OVP ATTACHMENT TO BEAM DETAIL

12" 9" 6" 3" 0
3"=1'-0"

3

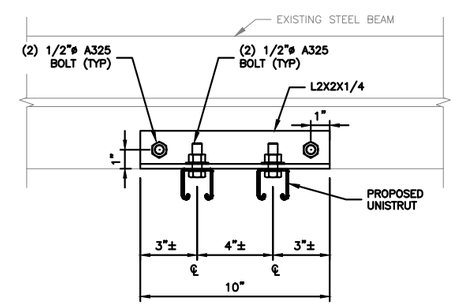


CONNECTION DETAIL

12" 9" 6" 3" 0
3"=1'-0"

4

dish wireless.

5701 SOUTH SANTA FE DRIVE
LITTLETON, CO 80120

NB+C TOTALLY COMMITTED.

NB+C ENGINEERING SERVICES, LLC.

100 APOLLO DRIVE
SUITE 303
CHELMSFORD, MA 01824
(978) 856-8308

COMMONWEALTH OF MASSACHUSETTS
KRUPAKAR KOLLEPARA
NO. 30019
REGISTERED PROFESSIONAL ENGINEER

IT IS A VIOLATION OF LAW FOR ANY PERSON, UNLESS THEY ARE ACTING UNDER THE DIRECTION OF A LICENSED PROFESSIONAL ENGINEER, TO ALTER THIS DOCUMENT.

| DRAWN BY: | CHECKED BY: | APPROVED BY: |
|---|---|---|
| CSG | NSB | DRG |

RFDS REV #: 1

CONSTRUCTION DOCUMENTS

SUBMITTALS

| REV | DATE | DESCRIPTION |
|---|---|---|
| 0 | 07/28/2023 | ISSUED FOR REVIEW |
| 1 | 08/30/2023 | BILL OF MATERIALS |

A&E PROJECT NUMBER

100753

DISH Wireless L.L.C.
PROJECT INFORMATION

BOBOS01058A

460 HILLSIDE AVENUE
NEEDHAM MA, 02494

SHEET TITLE

CONNECTION DETAILS

SHEET NUMBER

ST-2

| ITEM # | DESCRIPTION | SIZE | LENGTH | Part Number | QTY |
|---|---|---|---|---|---|
| 1 | ABS Cylinder | 6'-8"x3/16" | 9'-5" | N/A | 1 |
| 2 | Truss Head Bolt | 5/16"Ø | 1" | N/A | 28 |
| 3 | Washer | 5/16"Ø | N/A | N/A | 28 |
| 4 | Hex Nut | 5/16"Ø | N/A | N/A | 28 |
| 5 | Steel Plate | 4"x3/16" | 1'-3 1/2" | N/A | 8 |
| 6 | Steel Plate | 4"x3/16" | 9'-5" | N/A | 2 |
| 7 | Steel Pipe | 4" Nom. | 4" | N/A | 2 |
| 8 | Bolt, Thru | 5/8"Ø | 6 1/2" | N/A | 2 |
| 9 | Washer | 5/8"Ø | N/A | N/A | 2 |
| 10 | Hex Nut | 5/8"Ø | N/A | N/A | 4 |
| 11 | SCH40 Steel Pipe | 3-1/2" Nom. | 6'-10" | N/A | 1 |
| 12 | Steel Plate | 7"x7"x1/2" | N/A | N/A | 1 |
| 13 | A325 Bolt | 5/8"Ø | 3" | N/A | 4 |
| 14 | A325 Washer | 5/8"Ø | N/A | N/A | 4 |
| 15 | A325 Hex Nut | 5/8"Ø | N/A | N/A | 4 |
| 16 | P1000 Unistrut | 1-5/8"x1-5/8" | 2'-4" | N/A | 2 |
| 17 | Steel Angle | 2"x2"x1/4" | 10" | N/A | 2 |
| 18 | A325 Bolt | 1/2"Ø | 2" | N/A | 8 |
| 19 | A325 Washer | 1/2"Ø | N/A | N/A | 8 |
| 20 | A325 Hex Nut | 1/2"Ø | N/A | N/A | 8 |
| Quantities specified are for one concelamnt/sector | | | | | |

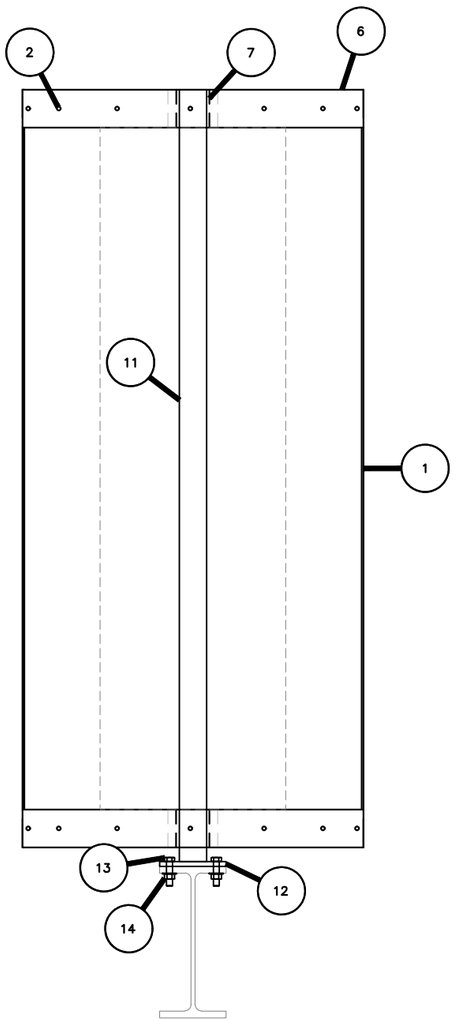


CONCEALMENT ELEVATION

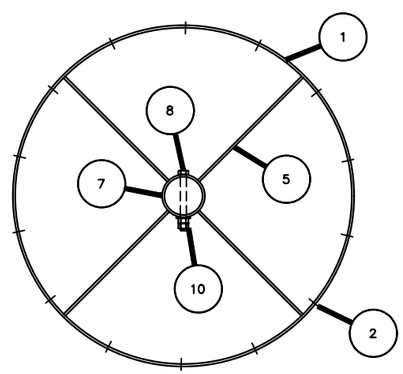


BULKHEAD PLAN

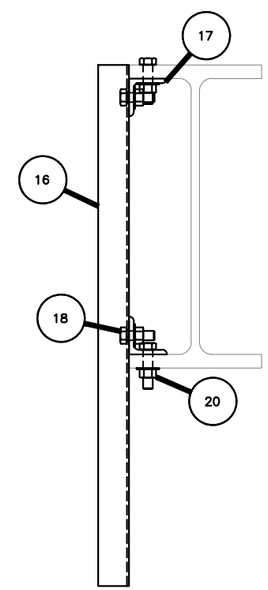


CONNECTION DETAIL


dish wireless.

5701 SOUTH SANTA FE DRIVE
LITTLETON, CO 80120

NB+C TOTALLY COMMITTED

NB+C ENGINEERING SERVICES, LLC.

100 APOLLO DRIVE
SUITE 303
CHELMSFORD, MA 01824
(978) 856-8308


COMMONWEALTH OF MASSACHUSETTS
KRUPAKAR KOLLEPARA
NO. 50019
REGISTERED PROFESSIONAL ENGINEER


IT IS A VIOLATION OF LAW FOR ANY PERSON, UNLESS THEY ARE ACTING UNDER THE DIRECTION OF A LICENSED PROFESSIONAL ENGINEER, TO ALTER THIS DOCUMENT.


| DRAWN BY: | CHECKED BY: | APPROVED BY: |
|---|---|---|
| CSG | NSB | DRG |

RFDS REV #: 1

CONSTRUCTION DOCUMENTS

SUBMITTALS

| REV | DATE | DESCRIPTION |
|---|---|---|
| 0 | 07/28/2023 | ISSUED FOR REVIEW |
| 1 | 08/30/2023 | BILL OF MATERIALS |

A&E PROJECT NUMBER

100753

DISH Wireless L.L.C.
PROJECT INFORMATION

BOBOS01058A

460 HILLSIDE AVENUE
NEEDHAM MA, 02494

SHEET TITLE

BILL OF MATERIALS

SHEET NUMBER

ST-3

**Site Name: BOBOS01058A**
Wireless Communication Facility
460 Hillside Avenue
Needham, MA 02494

*Photograph Information:*
View 2-Parking Loop
View from the West
Showing the Existing Site

NB+C
TOTALLY COMMITTED

**Site Name: BOBOS01058A**
Wireless Communication Facility
460 Hillside Avenue
Needham, MA 02494

*Photograph Information:*
View 2-Parking Loop
View from the West
**Showing the Proposed Site**

NB&C
TOTALLY COMMITTED.

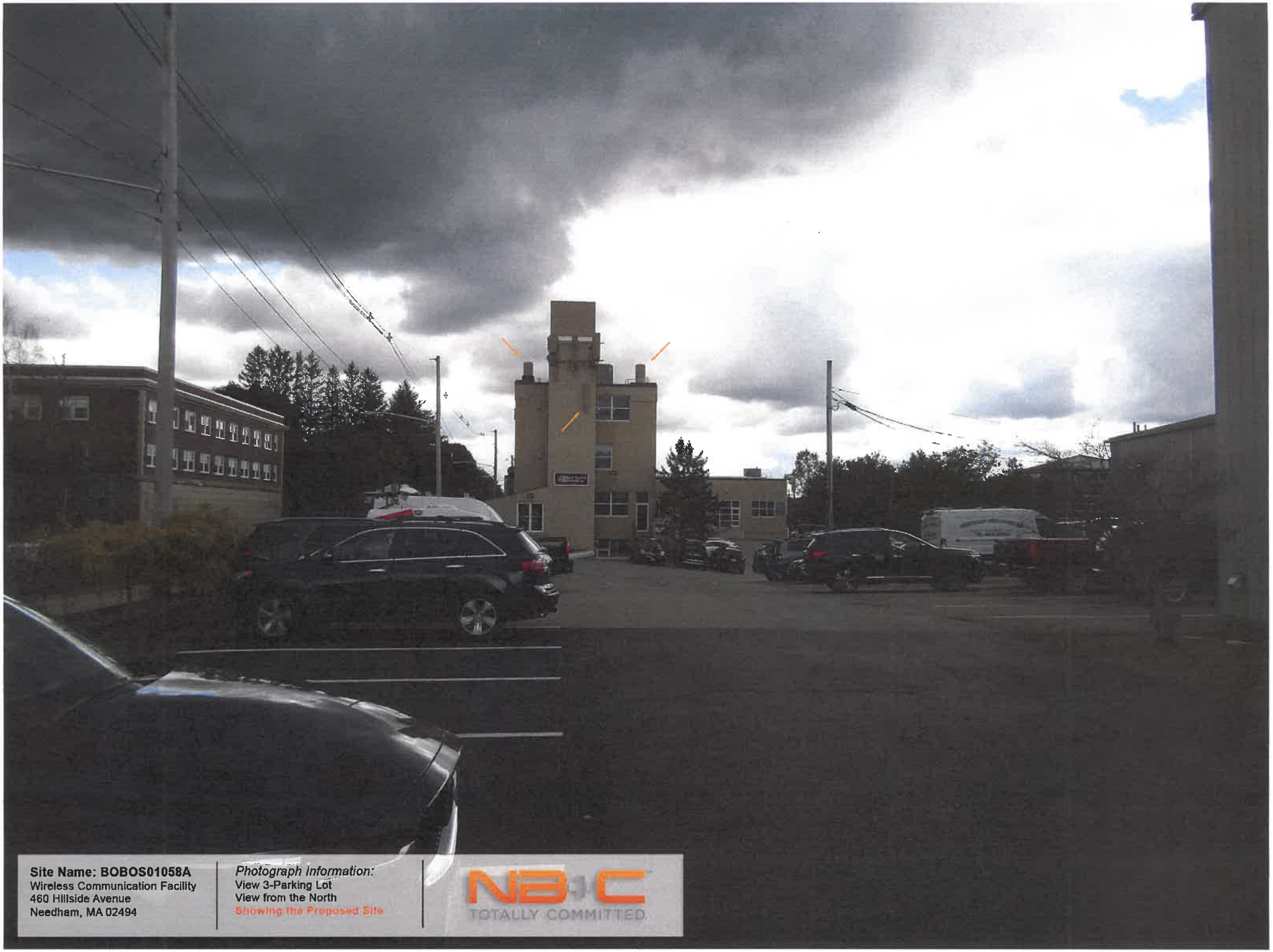

**Site Name: BOBOS01058A**
Wireless Communication Facility
460 Hillside Avenue
Needham, MA 02494

*Photograph Information:*
View 3-Parking Lot
View from the North
Showing the Proposed Site

NB+C
TOTALLY COMMITTED

View 1
View 2
View 3
Site
Hillside Ave
Highland Ave
Dale St
Mellen St
Hildreth Pl
Morton St
Needham Family Day Care
Gentle Giant Moving Company
Center Automotive
Citizens
Citigroup Technology
Webster Bank
Needham Heights Kinder Care
Van Dorsen Nutrition
Village Club
Purple Carrot
Bussmore Construction
Firstlight Home Care of West Suburban Boston
Beth Israel Deaconess-Family
Michael Hanzak
BOBOS01058A
Location Map
- not visible
- visible

**Site Name: BOBOS01058A**
Wireless Communication Facility
460 Hillside Avenue
Needham, MA 02494

*Photograph Information:*
View 1-Parking Loop
View from the Northeast
Showing the Existing Site

NB+C
TOTALLY COMMITTED.

**Site Name: BOBOS01058A**
Wireless Communication Facility
460 Hillside Avenue
Needham, MA 02494

*Photograph Information:*
View 1-Parking Loop
View from the Northeast
Showing the Proposed Site

NB+C
TOTALLY COMMITTED

# RF DESIGN SHEET

| | |
|---|---|
| **Issue Date** | 8/2/2023 |
| **Revision** | 2 |

| | |
|---|---|
| **RFDS Status** | Final |
| **Created By** | Parakkavetty, Sameer [Outlook] |

| SITE INFORMATION | |
|---|---|
| **DISH Site Number** | BOBOS01058A |
| **DISH Site Name** | 0 |
| **Prequal Asset ID** | |
| **AOI** | BOS |
| **PEA** | 7 |
| **Latitude** | 42.291209 |
| **Longitude** | -71.236381 |
| **Address** | 460 Hillside Avenue |
| **City** | Needham Heights |
| **State** | MA |
| **ZIP Code** | 02494 |
| **County** | Norfolk |
| **Rad Center (ft)** | 37/46 |
| **RAD Confirmed** | ***No Confirmed RAD*** |
| **Structure Type** | Rooftop |

| PROJECT ASSIGNMENTS | |
|---|---|
| **Market Manager** | Bradford Rainey |
| **Site Development Mgr.** | Gregory Costello |
| **RF Engineer** | Sameer Parakkavetty |
| **Site Acq Specialist/Develop. Cord.** | Julie Charest / |
| **SAQ Vendor/A&E Vendor** | N1 AND C MASTER HOLDCO LLC DBA NETWORK BUILDING AND CONSULTING LLC / N1 AND C MASTER HOLDCO LLC DBA NETWORK BUILDING AND CONSULTING LLC |
| **Asset Owner/Asset #** | Private Owner / |
| **Construction Mgr. (Lead/Field)** | Aaron Chandler / Armelindo Shahaj |
| **Contractor (General/Tower/Civil)** | / / |
| **Power Company / Transport Provider** | EVERSOURCE NSTAR / COMCAST |

| EMERGENCY CONTACT INFORMATION | |
|---|---|
| **Name** | Temporary Emergency Line |
| **Phone** | 866-624-6874 |

| LEASE AREA | |
|---|---|
| **Dimensions (ft.)** | |
| **Type** | Steel Platform |
| **Baseband Cabinet** | Charles(Amphenol)-H/EX |
| **Dimensions (in)** | 32" x 32.1" x 74" |
| **Baseband** | gNB-CU |
| **Generator Required** | |
| **Make/Model** | |

| DESIGN COMMENTS |
|---|
| CM to finalize cable lengths. |

# RF EQUIPMENT INFORMATION

| | | | | | |
|---|---|---|---|---|---|
| **Issue Date/Revision** | 8/2/2023 | **Revision:** 2 | **Latitude** | 42.291209 | **Longitude** -71.236381 |
| **Site ID** | BOBOS01058A | | **Prequal Asset ID** | | |
| **Site Address** | 460 Hillside Avenue, Needham Heights MA 02494 | | **SOW / RF Comments** | Dish proposes to place 3 antennas, 6 RRUs, 3 junction box(s), 3 fiber cable(s), and 3 (power/hybrid) cable(s), at the 37/46 foot RAD. Dish will require a lease area for ground equipment. CM to finalize cable lengths. | |
| **Structure Type** | Rooftop | | | | |
| ***sectors >20' apart?*** | ***Yes*** | ***Confirmed RAD?*** ***No Confirmed RAD*** 37/46 | | | |

| | Sector 1 (alpha) | | | Sector 2 (beta) | | | Sector 3 (gamma) | | |
|---|---|---|---|---|---|---|---|---|---|
| **ANTENNA** | | | | | | | | | |
| Antenna Mount Position | **1** | **2** | **3** | **1** | **2** | **3** | **1** | **2** | **3** |
| Antenna ID | | 1 | | | 2 | | | 3 | |
| Manufacturer | | Commscope | | | Commscope | | | Commscope | |
| Model Number | | FFVV-65B-R2 | | | FFVV-65B-R2 | | | FFVV-65B-R2 | |
| Dimensions H x W x D (in) | | 72.0" x 19.6" 7.8" | | | 72.0" x 19.6" 7.8" | | | 72.0" x 19.6" 7.8" | |
| Weight (lbs.) | | 70.8 | | | 70.8 | | | 70.8 | |
| TX Power Output (watts) | | 40000 | | | 40000 | | | 40000 | |
| ERP (dBm) | | 76.02 | | | 76.02 | | | 76.02 | |
| RAD Centerline Height (ft.) | | 37 | | | 46 | | | 46 | |
| Azimuths (True North) | | 10° | | | 120° | | | 240° | |
| Mech Down Tilt | | 0° | | | 0° | | | 0° | |
| Default Mount | | Generic | | | | | | | |
| **LOW BAND/RADIO #1** | | | | | | | | | |
| Manufacturer | | Samsung | | | Samsung | | | Samsung | |
| Model Number | | RF4450t-71A | | | RF4450t-71A | | | RF4450t-71A | |
| Dimensions H x W x D (in.) | | 16.5" x 15.0" x 11.0" | | | 16.5" x 15.0" x 11.0" | | | 16.5" x 15.0" x 11.0" | |
| Weight (lbs.) | | 94.58 | | | 94.58 | | | 94.58 | |
| Location | | Cabinet | | | Cabinet | | | Cabinet | |
| Band | | n71 \| | | | n71 \| | | | n71 \| | |
| Quantity | | 1 | | | 1 | | | 1 | |
| Port Assignment | | Port 1-4 | | | Port 1-4 | | | Port 1-4 | |
| Elec Down Tilt | | 2° | | | 2° | | | 2° | |
| **MID BAND/RADIO #2** | | | | | | | | | |
| Manufacturer | | Samsung | | | Samsung | | | Samsung | |
| Model Number | | RF4451d-70A | | | RF4451d-70A | | | RF4451d-70A | |
| Dimensions H x W x D (in) | | 15.0" x 15.0" x 8.9" | | | 15.0" x 15.0" x 8.9" | | | 15.0" x 15.0" x 8.9" | |
| Weight (lbs.) | | 61.3 | | | 61.3 | | | 61.3 | |
| Location | | Cabinet | | | Cabinet | | | Cabinet | |
| Quantity | | 1 | | | 1 | | | 1 | |
| Band | | n70 \|n66 | | | n70 \|n66 | | | n70 \|n66 | |
| Port Assignment | | Port 5-8 | | | Port 5-8 | | | Port 5-8 | |
| Elec Down Tilt | | 2° | | | 2° | | | 2° | |
| **OVP (Junction Box)** | | | | | | | | | |
| Manufacturer | | Raycap | | | Raycap | | | Raycap | |
| Model Number | | RDIDC-3045-PF-48 | | | RDIDC-3045-PF-48 | | | RDIDC-3045-PF-48 | |
| Dimensions H x W x D (in.) | | 18.97" x 16.21" x 9.64" | | | 18.97" x 16.21" x 9.64" | | | 18.97" x 16.21" x 9.64" | |
| Weight (lbs.) | | 21 | | | 21 | | | 21 | |
| Quantity | | 1 | | | 1 | | | 1 | |
| **LINE DETAILS** | | | | | | | | | |
| Line Type | Power | Fiber | | Power | Fiber | | Power | Fiber | |
| Manufacturer | NWS | NWS | | NWS | NWS | | NWS | NWS | |
| Model Number | DC-D06C06-XXXFT_6AWG | FT-LCULCU-D8SMA-XXXFT | | DC-D06C06-XXXFT_6AWG | FT-LCULCU-D8SMA-XXXFT | | DC-D06C06-XXXFT_6AWG | FT-LCULCU-D8SMA-XXXFT | |
| Diameter (O.D. in.) | 0.938" | 0.33" | | 0.938" | 0.33" | | 0.938" | 0.33" | |
| Weight (lbs. per ft.) | .582 lbs/ft | TBD | | .582 lbs/ft | TBD | | .582 lbs/ft | TBD | |
| Quantity | 1 | 1 | | 1 | 1 | | 1 | 1 | |
| Approx. Cable Length | 180 | 180 | | 155 | 155 | | 172 | 172 | |
| **OTHER EQUIPMENT** | | | | | | | | | |
| Type of Equipment | | | | | | | | | |
| Manufacturer | | | | | | | | | |
| Model Number | | | | | | | | | |
| Dimensions H x W x D (in) | | | | | | | | | |
| Weight (lbs.) | | | | | | | | | |
| Equipment Location | | | | | | | | | |
| Quantity | | | | | | | | | |

| **Frequencies** | **n29** | **n66** | **n70** | **n71** |
|---|---|---|---|---|
| Downlink (TX) | - | \|2160 - 2170\| \|2180 - 2200\| | \|1995 - 2020\| | \|642 - 652\| |
| Uplink (RX) | - | \|1760 - 1770\| | \|1700 - 1710\| | \|688 - 698\| |

**TOWN OF NEEDHAM, MASSACHUSETTS**
**PUBLIC WORKS DEPARTMENT**
**500 Dedham Avenue, Needham, MA 02492**
**Telephone (781) 455-7550 FAX (781) 449-9023**

December 5th, 2023

Needham Zoning Board of Appeals
Needham Public Safety Administration Building
Needham, MA 02492

RE: Case Review-Special Permit
460 Hillside Ave - Special Permit

Dear Members of the Board,

The Department of Public Works has completed its review of the above referenced special permit to allow the addition of telecommunication equipment on the roof of the building and seeking relief to zoning bylaw sec 6.7.3.3.

The documents submitted for review are as follows:

- Application for Special Permit dated 11/20/23;
- Letter to ZBA from George Giunta Jr., Esq. dated 7/18/22;
- Plan Set for Dish Wireless prepared by NB+C Engineering date 7/26/23 consisting of 33 Sheets

Our comments and recommendations are as follows:

- We have no comment or objection to the Special Permit

If you have any questions regarding the above, please contact our office at 781-455-7538.

Truly yours,

Thomas A Ryder
Town Engineer

tryder

PLANNING & COMMUNITY DEVELOPMENT
PLANNING DIVISION

December 5, 2023

Mr. Jonathan Tamkin, Chair, and Members
Zoning Board of Appeals
Public Services Administration Building
500 Dedham Avenue
Needham, MA 02492

Dear Mr. Tamkin and Members of the Zoning Board of Appeals:

At its meeting of December 5, 2023, the Planning Board reviewed the applications to be heard by the Board of Appeals on December 14, 2023, and made the following recommendations:

1. **30 Wilshire Park –**Jeremy & Jessica Karlin, owners, applied for a Special Permit under Sections 1.4.6, and any other applicable section of the By-Law to alter, enlarge and extend a pre-existing, non-conforming single-family to allow the demolition of an existing deck and stairs and replace it with a basement and a family room above. The property is located at 30 Wilshire Park, Needham, MA in the Single-Residence B (SRB) District.

   The Planning Board previously commented on this application by letter dated October 3, 2023. The comments were as follows: The subject proposal will require a variance. The property is currently conforming as to FAR at .37. In the SRB district the maximum permissible FAR is .38. The addition as proposed creates a noncompliant FAR of .42. This change is not permissible by special permit and will require a variance. Section 1.4.6 of the By Law states as follows: "*The issuance of a special permit hereunder shall not authorize the violation of any dimensional, parking or intensity regulations with which the structure or use was therefore in conformity.*" The Planning Board further notes that the ZBA should ensure that the proposal meets the Stormwater By-Law. (This was a vote of 3-0, as Planning Board Chair Adam Block recused himself).

2. **460 Hillside Avenue** - Dish Wireless, LLC, applicant, applied to the Board of Appeals for a Special Permit under Sections 6.7.3.3 (b) (c) and any other applicable section of the By-Law to install as part of their wireless telecommunications network some of the following equipment: 3 antennas, 6 remote radio units, 3 junctions boxes, 3 fiber cables, and 3 power cables. The property is located at 460 Hillside Avenue, Needham, MA in the Industrial (I) District.

   The Planning Board makes NO COMMENT.
   (This was a vote of 4-0, as Planning Board Member Jeanne S. McKnight recused herself).

3. **320 Grove Street -** Corbin Petro and Jessica Gelman, owners, applied to the Board of Appeals for a Variance under MGL 40A, Section 10, 4.2.3, and Section 7.5.3 and any other applicable section of the Needham By-Law to seek zoning relief to allow side setbacks of no less than 15 feet where 25 feet are allowed due to unusual soil, shape of topography of the land. This request is associated with the demolition and reconstruction of an existing non-conforming single family home.

   The Planning Board makes NO COMMENT.

4. **1688 Central Avenue -** Holly Clarke, Gregg Darish, Robert DiMase, Matthew and Nicole Heideman, Carl Jonasson, Ann and Peter Lyons, and Eileen Sullivan, appellants, applied to the Board of Appeals for an Appeal of Building Inspector Decision (ABID) of Building Permit BC23-10079 issued to Matt Borrelli and Needham Enterprise LLC dated September 19, 2023, for the construction of a childcare facility. The ABID concludes that the Building Permit plans on file do not demonstrate that the construction, alteration or use as proposed complies with the Zoning By-Laws as limited by the Dover Amendment MGL 40A, Section 3. The property is located at 1688 Central Street, Needham, MA in the Single-Residence A (SRA) District.

   The Planning Board previously commented on this application by letter dated November 7, 2023. The comments were as follows:
   The Planning Board makes NO COMMENT.
   (This was a vote of 3-0, as Planning Board Vice-Chair Natasha Espada and Planning Board Member Paul S. Alpert recused themselves).

NEEDHAM PLANNING BOARD

*Lee Newman*

Lee Newman

Director of Planning and Community Development

## Daphne Collins

**From:** John Schlittler
**Sent:** Monday, December 4, 2023 4:13 PM
**To:** Daphne Collins
**Subject:** RE: 460 Hillside Avenue - ZBA Administrative Review - Due December 5, 2023

My only question is whether the antennas or other equipment would interfere with public safety radio operations. Thanks

**From:** Daphne Collins <dcollins@needhamma.gov>
**Sent:** Wednesday, November 29, 2023 1:45 PM
**To:** Joseph Prondak <jprondak@needhamma.gov>; Tara Gurge <TGurge@needhamma.gov>; John Schlittler <JSchlittler@needhamma.gov>; Thomas Ryder <tryder@needhamma.gov>; Justin Savignano <jsavignano@needhamma.gov>; Tom Conroy <TConroy@needhamma.gov>; Donald Anastasi <DAnastasi@needhamma.gov>; Jay Steeves <steevesj@needhamma.gov>; Ronnie Gavel <rgavel@needhamma.gov>
**Subject:** 460 Hillside Avenue - ZBA Administrative Review - Due December 5, 2023

Good Afternoon All-

**460 Hillside Ave** – Dish Wireless, LLC, applied to install as part of their wireless telecommunications network some of the following equipment: 3 antennas, 6 remote radio units, 3 junctions boxes, 3 fiber cables, and 3 power cables. The property is located at 460 Hillside Avenue, Needham, MA in the Industrial (I) District.

Applicable Zoning By-Law – 6.7.3.3 (a)(b)

Attached please find the application with its associated back-up documents for your information and review.

I appreciate your comments no later than **December 5, 2023** to allow time for the applicant to respond prior to the hearing.

If you have any questions, feel free to contact me.

Thank you,
Daphne

**Daphne M. Collins**
Zoning Specialist

Phone 781-455-7550, x 261
Web https://www.needhamma.gov/
https://needhamma.gov/1101/Board-of-Appeals
www.needhamma.gov/NeedhamYouTube

Town of Needham
Planning and Community Development
500 Dedham Avenue
Needham, MA 02492

**Regular Office Hours: Mon-Wed 8:30am – 5:00pm**
**Remote Hours: Thurs 8:30am-5:00pm**

## Daphne Collins

**From:** Tom Conroy
**Sent:** Tuesday, December 5, 2023 3:00 PM
**To:** Daphne Collins
**Subject:** RE: 460 Hillside Avenue - ZBA Administrative Review - Due December 5, 2023

Hi Daphne,
Fire approves.

Thomas M. Conroy
Fire Chief - Needham Fire Department
tconroy@needhamma.gov
Ph (781) 455-7580

**From:** Daphne Collins <dcollins@needhamma.gov>
**Sent:** Tuesday, December 5, 2023 9:34 AM
**To:** Jonathan D. Tamkin (jtamkin@tamkinhochberg.com) <jtamkin@tamkinhochberg.com>; Tara Gurge <TGurge@needhamma.gov>; Thomas Ryder <tryder@needhamma.gov>; Justin Savignano <jsavignano@needhamma.gov>; Tom Conroy <TConroy@needhamma.gov>; Donald Anastasi <DAnastasi@needhamma.gov>; Jay Steeves <steevesj@needhamma.gov>; Ronnie Gavel <rgavel@needhamma.gov>
**Subject:** FW: 460 Hillside Avenue - ZBA Administrative Review - Due December 5, 2023

Good Morning-
Friendly reminder that ZBA Comments are due today.
Thank you,
Daphne

**Daphne M. Collins**
Zoning Specialist

**Phone** 781-455-7550, x 261
**Web** https://www.needhamma.gov/
https://needhamma.gov/1101/Board-of-Appeals
www.needhamma.gov/NeedhamYouTube

Town of Needham
Planning and Community Development
500 Dedham Avenue
Needham, MA 02492

**Regular Office Hours: Mon-Wed 8:00am – 5:00pm**
**Remote Hours: Thurs 8:00am-5:00pm**

**From:** Daphne Collins
**Sent:** Wednesday, November 29, 2023 1:45 PM
**To:** Joseph Prondak <jprondak@needhamma.gov>; Tara Gurge <TGurge@needhamma.gov>; John Schlittler <JSchlittler@needhamma.gov>; Thomas Ryder <tryder@needhamma.gov>; Justin Savignano <jsavignano@needhamma.gov>; Tom Conroy <TConroy@needhamma.gov>; Donald Anastasi

Town of Needham
Building Department
500 Dedham Ave.
Needham, MA 02492

*Tel.781-455-7550 x 308*

December 5, 2023

Town of Needham / Zoning Board of Appeals
500 Dedham Ave.
Needham, MA. 02492

Re: Application review for the December Hearing

**460 Hillside Avenue**

Dear Board Members,

The applicant, Dish Wireless LLC is seeking to install telecommunications equipment on the exterior of the building at 460 Hillside Avenue. The proposal includes one wall mounted antenna and 2 roof mounted antenna (3 total). The roof mounted antennae are to be enclosed by a cylindrical shroud, along with typical related equipment.

The property is located within and Industrial Zoning District. Section 6.7.3.1 (e) and (f) of the Zoning Bylaw, Wireless Communications Facilities, Uses as of Right, allows:

1. Roof mounted antennae are allowed if they are not more than 10' high and are set back a distance from the edge of the roof at least the distance equal to their height. In this case, these (2) antennae are 8 feet high but setback only 2.9 feet from the roof edge. Therefore, these are only allowed upon issuance of a Special Permit as provided for in Section 6.7.3.3, part (b), roof mounted equipment not otherwise allowed in Section 6.7.3.1 (f).

2. Wall mounted antennae that do not extend above the face of the wall, do not obscure any architectural feature and are either concealed behind existing architectural features or are painted to match the color of the façade on which it is mounted. This (1) antenna is located below the top of the wall and is proposed to be painted to match the facade and is therefore allowed as a matter of right.

Please contact my office with any questions.

Joe Prondak
Building Commissioner
Town of Needham

## Daphne Collins

**From:** Tara Gurge
**Sent:** Tuesday, December 5, 2023 10:48 AM
**To:** Daphne Collins
**Subject:** RE: 460 Hillside Avenue - ZBA Administrative Review - Due December 5, 2023

Daphne –

The Public Health Division conducted our Zoning Board review of Dish Wireless, LLC, installation of additional equipment as part of their wireless telecommunications network, at their property located at **#460 Hillside Avenue.** See comment noted below:

- Please ensure that this additional equipment does not cause any risk of Public Health Safety or Nuisance concerns. As long as this applicant meets all required local Building/Zoning, Fire and all Federal Communications Commission (FCC) requirements, then we have no further comments at this time.

Please let us know if you have any follow-up questions or if you need any additional information from us on those requirements.

Thanks,

**TARA E. GURGE, R.S., C.E.H.T., M.S.** (she/her/hers)
**ASSISTANT PUBLIC HEALTH DIRECTOR**
**Needham Public Health Division**
**Health and Human Services Department**
**178 Rosemary Street**
**Needham, MA 02494**
**Ph- (781) 455-7940; Ext. 211/Fax- (781) 455-7922**
**Mobile- (781) 883-0127**
**Email - tgurge@needhamma.gov**
**Web- www.needhamma.gov/health**

*please consider the environment before printing this email*

*STATEMENT OF CONFIDENTIALITY*
*This e-mail, including any attached files, may contain confidential and privileged information for the sole use of the intended recipient(s). Any review, use, distribution or disclosure by others is strictly prohibited. If you are not the intended recipient (or authorized to receive information for the recipient), please contact the sender by reply e-mail and delete all copies of this message. Thank you.*

Follow Needham Public Health on Twitter!

RECEIVED TOWN CLERK
NEEDHAM, MA 02492

2011 OCT -3 AM 10: 17

# TOWN OF NEEDHAM
# MASSACHUSETTS
# BOARD OF APPEALS

**Verizon Wireless**
Record owner: Hillside Investment Group
**460 Hillside Ave., Map 100, Parcel 3**

September 15, 2011

Upon the application **Bell Atlantic Mobile of MA Corp, Ltd. (Verizon Wireless), 400 Friberg Parkway, Westborough MA 01581,** tenant, for a special permit under Sections 6.7, 6.7.3.3, 6.7.5, 1.4.6, 4.6.1, 3.2.1, 7.5.2 and any other applicable Sections of the By-Law to permit the modification of or amendment to an existing Special Permit granted on April 25, 2007, and related findings and/or determinations for the removal of 12 antennas and replacement of 12 new antennas with similar dimensions at the same height and with 6 new cables. The property in question is **460 Hillside Avenue, Needham,** in the Industrial District. A public hearing was held in the Charles River Room, Public Services Administration Building, 500 Dedham Avenue, Needham, MA, on Thursday, September 15, 2011 at 7:30 PM, pursuant to notice thereof, published in a local newspaper and mailed to all parties of interest.

**Documents of Record:**

- Application Packet, received August 22, 2011 containing:
    1. Memo supporting the application signed and submitted by James A. Valeriani, attorney for the applicant, dated August 22, 2011;
    2. Application signed by James A. Valeriani, attorney for the applicant, and stamped by the Town Clerk on August 22, 2011;
    3. Design Review Board application, approved with conditions, 3 pages;
    4. C-1 460 Hillside Ave. Roof Plan & Partial Elevation, signed and stamped by Bradford A. Mills RPE, dated August 12, 2011;
    5. Google Map of 460 Hillside Ave. with antennae site located with an arrow;
    6. Letter supporting the application signed by Ken Shapiro, Authorized Agent for the property owner, dated July 7, 2011;
    7. 460 Hillside Ave. commercial property record card;
    8. April 25, 2007 decision issued by the Zoning Board of Appeals to Bell Atlantic Mobile of Massachusetts;
    9. HBX-9014DS-T2M Product Specifications;
    10. LNX-6514DS-VTM Product Specification;
    11. Original Plan Submitted for 2007 ZBA Approval, T-1 Title Sheet,

Needham Heights, signed and stamped by Ronald J. Jackman, dated January 31, 2007;

12. Original Plan Submitted for 2007 ZBA Approval, A-1 Roof Plan, Needham Heights, signed and stamped by Ronald J. Jackman, dated January 31, 2007;
13. Original Plan Submitted for 2007 ZBA Approval, A-2 Elevation, Needham Heights, signed and stamped by Ronald J. Jackman, dated January 31, 2007;
14. Original Plan Submitted for 2007 ZBA Approval, C-1, Roof Plan, Needham Heights, stamped by Douglas A. Stephens, PLS, dated January 31, 2007.

- Received prior to September 15, 2011 hearing:
  1. Certified abutters list;
  2. 460 Hillside Ave. title confirming ownership of the property by Hillside Investment Group, LLC, represented by Kenneth Shapiro;
  3. 460 Hillside Ave. Norfolk County Registry of Deeds land abstract confirming ownership of the property by Hillside Investment Group, LLC, represented by Kenneth Shapiro.

- Received at the September 15, 2011 hearing;
  1. Memo re: installation of radio base station antennas and associated equipment comprising an antenna substitution for the Verizon Wireless Personal Wireless Services facility located at 460 Hillside Avenue in Needham, MA, signed and submitted by Donald L. Haes, JR., Ph.D., CHP, dated September 12, 2011.

September, 2011

The Board included Jon D. Schneider, Chairman; Peter Friedenberg, Associate Member; and Gregory J. Condon, Associate Member. Appearing before the Board was Jim Valeriani, attorney for the applicant. Mr. Schneider opened the hearing at 8:00 PM by reading the notice of hearing. The Planning Board had no comment.

Mr. Valeriani presented his case. The Board issued a special permit in 2007 to mount antennas on the roof of the industrial building at 460 Hillside Ave. Verizon Wireless wishes to modify the permit by replacing 12 of the antennas with 12 new antennas for their 4G service. Three of the new antennas will be six feet long, but the applicant does not believe that it is a noticeable difference from the current four foot long antennas. The Design Review Board agreed, but requested that the antennas be painted to match the building.

Mr. Schneider asked if they had a report regarding compliance of the radio frequencies with FCC guidelines. Mr. Valeriani replied that they will be similar to the existing frequencies. All frequencies are well within the ranges set by the federal communications commission. There will be no increase in emissions due to this modification. Mr. Valeriani read the conclusion of a report, and then submitted a copy.

Mr. Schneider stated that the Zoning By-Law also calls for a report from a structural engineer. Mr. Valeriani replied that the facility is attached to the building itself by a steel mount and that newly stamped engineering plans will be provided during the process of acquiring a building permit. The changes are so minimal that the wind loading will not change, and the increase in weight is negligible. Mr. Schneider stated that, although a structural report is usually submitted, to the Board, he is willing to have the report submitted to the Building Inspector in this case due to the minimal nature of the changes.

Mr. Schneider invited the public to come forward. None did so.

Mr. Valeriani stated that the construction process will take a few days, will be carried out during business hours, and will likely be completed before the end of the year.

At 8:07 Mr. Friedenberg moved to grant an amendment to the existing special permit subject to the condition imposed by the Design Review Board that the antennas be painted to match the building, and provided that a certification as to the structural capacity be provided to the Building Inspector. Mr. Condon seconded the motion. The Board voted unanimously in favor.

**Decision:**

On the basis of the evidence presented at the hearing, the Board makes the following findings:

1. The premises is located in the Industrial District and improved with a three story office building. In its decision dated April 28, 2005, the Board found that the building is 40 feet 8 inches in height which exceeds the current limitation of 40 feet. In addition, there is an extended elevator shaft that extends an additional 9 feet 8 inches bringing the total height of the building to 50 feet 4 inches. The building exceeds the current height limit, was constructed prior to the adoption of the height limitation in the District and constitutes a lawful nonconforming building.

2. The applicant currently has twelve existing antennas on the roof of the building together with related transmitters, cable connections and equipment inside the building as authorized by a special permit dated April 25, 2007. The applicant proposes to install replacements antennas with related cables to enable new 4G service. Nine of the new antennas will be 4 ft in height, the same as existing antennas, and three will be 6 ft in height.

3. The applicant is licensed by the Federal Communications Commission to construct and operate a wireless telecommunications network.

4. The applicant has submitted an affidavit of a radio frequency consultant that the radio frequency energy will comply with the FCC limits for the public and with FCC standards on interference.

5. The applicant will submit a structural analysis to the Building Inspector certifying as to the structural safety of the installation.

6. The proposed installation is consistent with the policies set forth in Section 6.7.1 of the Zoning By-law including maximizing the use of existing buildings, encouraging co-location of equipment and concealing new equipment and the criteria set forth in Section 6.7.5 of the Zoning By-law.

7. The proposed installations is consistent with the general purposes of the Zoning By-law, is designed in a manner compatible with the existing natural features of the site, is compatible with the characteristics of the surrounding area and does not have a demonstrable adverse impact on the surrounding area.

8. The issuance of a special permit will not result in the violation of any dimensional, parking or intensity regulation with which the structure was theretofore in conformity.

9. The proposed installation will not be substantially more detrimental to the neighborhood than the existing nonconforming structure.

10. The applicant has complied with Section 6.7 of the Zoning By-law by obtaining the approval of the Design Review Committee.

On the basis of the foregoing findings, following due and open deliberation, upon motion duly made and seconded, the Board by unanimous vote, grants the applicant a Special Permit under Section 1.4.6 and Section 6.7.3.3(b) of the Zoning By-law to install replacement antennas and related cables on the roof of the existing building at 460 Hillside Avenue, substantially in accordance with the plans dated August 12, 2011 certified by Bradford A. Mills, Registered Professional Engineer, submitted with the application and subject to the conditions that:

a) the applicant shall submit a structural analysis to the Building Inspector in a form satisfactory to the Building Inspector as a condition to obtaining a building permit:

b) the new equipment shall be painted as required by the approval of the Design Review Committee.

Jon D. Schneider, Chairman

Peter Friedenberg, Member (Associate)

Gregory Condon, Associate Member

RECEIVED TOWN CLERK
NEEDHAM, MA 02492

2008 JUL 14 PM 4:30

# TOWN OF NEEDHAM
# MASSACHUSETTS
# BOARD OF APPEALS
## METROPCS MASSACHUSETTS LLC
## JUNE 19, 2008

Upon the application of MetroPCS Massachusetts LLC, 205 Billerica Road, Chelmsford, MA, tenant, to the Board of Appeals for a special permit under Sections 1.4.6, 4.6.1, 6.7.3.1(e), 6.7.5, 7.5.2, and any applicable section of the By-law for rooftop wireless communication antenna and equipment in the Industrial District at 460 Hillside Avenue, a public hearing was held at the Needham Public Library, 1139 Highland Avenue, Needham, MA, the on Thursday, June 19, 2008, in the evening, pursuant to notice thereof published in a local newspaper and mailed to all parties in interest.

Filed with the application was a packet entitled "Project Narrative: MetroPCS Massachusetts LLC, Application for Special Permit to alter a Preexisting Nonconforming Structure" by MetroPCS, dated April 4, 2008. The Planning Board issued "No Comment" in its letter dated June 17, 2008. Appearing on the application was Mike Walsh of J. Lee Consulting, Inc., 132 Central Street, Suite 203C, Foxborough, MA. Associate Member Gregory J. Condon replaced Jonathan D. Tamkin, who was absent.

Mr. Walsh stated that MetroPCS Massachusetts, LLC (the "Applicant"), seeks permission to colocate three panel antennas encased in a fiberglass cylinder, mounted at the side of the elevator penthouse plus one E911Global Positioning System antenna. Mr. Walsh referred to this mounting proposal as an improved design over what was submitted to Design Review. Mr. Walsh stated that he will return to the Design Review Board to gain approval for the changed plan "MetroPCS, 460 Hillside, 'Zoning'": T-1, Z-1, and Z-2, dated June 18, 2008. Walsh stated that the Applicant has a signed lease, dated May 1, 2008, and provided a copy of the lease to the Board.

Mr. Walsh stated that there would be a condenser sited by the railroad tracks, and that all the mechanicals would be located in the interior of the building. The proposed antennas are separated from the antennas of the other carriers sited at the property.

No one appeared in opposition to the proposal. The hearing closed, and the Board proceeded to deliberate.

**DECISION:**

On the basis of the evidence presented at the hearing on the application of Metro PCS Massachusetts LLC (the "applicant") for a special permit under Section 6.7.3.3, 6.7.5, 1.4.6, 4.6.1, 3.2.1 and 7.5.2 of the Zoning By-law to permit wireless telecommunications rooftop installation in Industrial District at 460 Hillside Avenue, the Board makes the following findings:

1. The premises is located in the Industrial District and improved with a three story office building. In its decision dated April 28, 2005, the Board found that the building is 40 feet 8 inches in height which exceeds the current limitation of 40 feet. In addition, there is an extended elevator shaft that extends an additional 9 feet 8 inches bringing the total height of the building to 50 feet 4 inches. The building exceeds the height limit, was constructed prior to the adoption of the height limitation in the District and constitutes a lawful nonconforming building.

2. The Applicant proposes to mount a canister containing three antennas on the extended elevator shaft at a centerline of 57 feet above ground level with coaxial cable running to an equipment cabinet in the basement.

3. The proposed installation is consistent with the policies set forth in Section 6.7.1 of the Zoning By-law including maximizing the use of existing buildings, encouraging co-location of equipment and concealing new equipment and the criteria set forth in Section 6.7.5 of the Zoning By-law.

4. The proposed installations is consistent with the general purposes of the Zoning By-law, is designed in a manner compatible with the existing natural features of the site, is compatible with the characteristics of the surrounding area and does not have a demonstrable adverse impact on the surrounding area.

5. The Applicant obtained approval of the Design Review Committee, but made minor changes that require a further approval.

6. The issuance of a special permit will not result in the violation of any dimensional, parking or intensity regulation with which the structure was theretofore in conformity.

7. The proposed installation will not be substantially more detrimental to the neighborhood than the existing nonconforming structure.

On the basis of the foregoing findings, following due and open deliberation, upon motion duly made and seconded, the Board by unanimous vote, grants the applicant a Special Permit under Section 1.4.6 and Section 6.7.3.3(b) of the Zoning By-law to install communications equipment on the roof of the existing building at 460 Hillside Avenue, substantially in accordance with the drawings prepared by Applicant revised 6/16/08

referring to the site and submitted at the hearing, subject to final approval by the Design Review Committee.

Michael A. Crowe, Chairman

Jon D. Schneider, Member

Gregory J. Condon, Associate Member

460 Hillside Ave.

2007 MAY 17 PM 1:59

# TOWN OF NEEDHAM
# MASSACHUSETTS
# BOARD OF APPEALS
## APRIL 25, 2007

**BELL ATLANTIC MOBILE OF MASSACHUSETTS**
**dba VERIZON WIRELESS**

Upon the application of Bell Atlantic Mobile of Massachusetts d/b/a Verizon Wireless, c/o Dalmus, 400 Friberg Parkway, Westborough, MA, tenant, to the Board of Appeals for a special permit under Sections 6.7.3.3, 6.7.5, 1.4.6, 4.6.1, 3.2.1 and 7.5.2 to permit wireless telecommunication rooftop installation in Industrial District at 460 Hillside Avenue, a public hearing was held at the John Eliot School, 135 Wellesley Street, Needham, MA on Wednesday, April 25, 2007, in the evening, pursuant to notice thereof published in a local newspaper and mailed to all parties in interest.

Filed with the application was "Application for a Special Permits and Findings and Determinations to Co-locate roof-Mounted Antennas and accompanying Wireless Communication Equipment on an Existing Commercial Building Located at 460 Hillside Avenue in the Industrial District", prepared by Kristine E. Kraushaar, Robinson & Cole LLP, One Boston Place, Boston, MA, dated March 27, 2007. Submitted on April 11, 2007, was a facsimile copy of Design Review Board approval, dated April 2, 2007.

Appearing before the Board was Kristine E. Kraushaar and Michael Giaimo, of Robinson and Cole, with Luis Teves RFE, Ram Satyaprasad, and David Tivnan representing Verizon. Ms. Kraushaar stated that they received approval from Design Review on April 2, 2007. Mr. Tivnan stated that the generator will be installed to insure coverage 24-hour per day coverage, and that the generator is regular protocol for the carrier. Condensers will be sited on concrete pads by other existing condensers, which are sited beyond the Southeast corner of the building. These condensers are separated from the MBTA train tracks by an existing fence. The generator is approximately 5 feet by 10 feet, which is less than 100 square feet. The generators are guaranteed not to explode, and have safety features as utilized in residential or hospital zones. They do have sound proofing, and are very quiet.

The 12 panel array of antennas will be sited toward the center of the roof at 460 Hillside (the "Premises"). Remote testing will take place approximately once per week. The testing will take place during the daytime hours in order to minimize potential residential disruption.

Mr. Giaimo stated that there is currently no federal requirement to provide annual reports to the Town. He stated that the network and site is regularly monitored. The Board expressed the need to insure compliance with the FCC and OSHA guidelines for Uncontrolled/public area, which would include limited access, and hazard warning signage at the access point to the rooftop of the Premises.

No one appeared in opposition to the proposal. The Planning Board letter of

9. The proposed installation will not be substantially more detrimental to the neighborhood than the existing nonconforming structure.

On the basis of the foregoing findings, following motion duly made and seconded, after due and open deliberation, the Board by unanimous vote grants the Applicant a special permit under Section 1.4.6 and Section 6.7.3(b) of the Zoning By-law to install telecommunications equipment on the roof of the existing building at 460 Hillside Avenue substantially in accordance with drawings prepared by Bay State Design dated 01.31.07, revised 03.27.07, submitted with the application and subject to the following conditions:

(a) The Applicant shall comply with the provisions of Section 6.7.5 (where applicable) 6.7.8 and 6.7.9 of the Zoning By-law with respect to the installation and maintenance of the equipment; and

(b) The Applicant shall comply with the conditions imposed by the Design Review Board, if any.

Michael A. Crowe, Chairman

Jon D. Schneider, Member

Jonathan Tamkin, Member

460 Hillside Ave.

RECEIVED TOWN CLERK
NEEDHAM, MA 02492
2006 JUN 30 PM 4:59

TOWN OF NEEDHAM
MASSACHUSETTS
**BOARD OF APPEALS**

JUNE 14, 2006

OMNIPOINT COMMUNICATIONS, INC.

Upon the application of Omnipoint Communications, Inc., 50 Vision Blvd, East Providence, RI, tenant, to the Board of Appeals for a Special Permit under Sections 1.4.6, 4.6.1, 6.7.3.1(e), 6.7.5, 7.5.2, and any applicable section of the By-law for rooftop wireless communication antenna and equipment in the Industrial District at 460 Hillside Avenue a public hearing was held at the Stephen Palmer Senior Center, 83 Pickering Street, Needham, MA on Wednesday, June 14, 2006 at the John Eliot School, 135 Wellesley Avenue, Needham, in the evening, pursuant to notice thereof published in a local newspaper and mailed to all parties in interest.

Filed with the application was a packet of information entitled "Application for Site Plan Review and Special Permit to alter a Preexisting Nonconforming Structure for a Wireless Communication Facility", for 460 Hillside Avenue, prepared by Craig M. Tateronis, Esq., Prince. Lobel, Glovsky & Tye LLP, 100 Cambridge Street, Suite 2200, Boston, MA, dated May 4, 2006. Design Review approved the proposal, with conditions, on June 2, 2004.

Appearing before the Board was Attorney Robert Scarpello of Prince, Lobel, Glovsky & Tye, LLP, 100 Cambridge Street, Suite 2200, Boston, MA, representing Omnipoint Communications, Inc., 50 Vision Blvd, East Providence, RI (the "Applicant"). Attorney Scarpello stated that the Applicant is licensed with the FCC and requests permission to alter a preexisting nonconforming structure by installing an antenna on the roof of the building. The existing building was constructed in 1925, and is 52 feet tall at the heighest point, where the maximum allowable height is 40 feet. The existing building is located next to the MBTA train tracks, and currently has antennas from various wireless carriers situated on the roof top.

The proposed three-panel antenna will be housed within a canister, at a centerline height of 57 feet, 1 inch, extending approximately seven feet, four inches above the height of the building. Associated equipment will be housed in an equipment cabinet. Mr. Scarpello stated that the proposal will not be any more detrimental to the neighborhood than the existing building with antennae. The canister will have a color and texture to match the existing building and camouflage the antennae. The site was chosen for service to customers, as well as meeting the By-law recommendation for colocation of antenna sites.

No one appeared in favor of, or in opposition to, the application. The Planning Board letter dated June 9, 2006 was read into the record. The hearing closed at 8:20 p.m., and the Board proceeded to deliberate.

**DECISION:**

On the basis of the evidence presented at the hearing on the application of Omnipoint Communications, Inc. (the "Applicant") for a special permit under Section 1.4.6, 4.6.1, 6.7.3.1(e), 6.7.5, 7.5.2 and any applicable section of the Zoning By-law to allow telecommunications equipment on the rooftop in an Industrial District at 460 Hillside Avenue (the "Premises"), the Board makes the following findings:

1. The Premises is located in the Industrial District and improved with a three story office building. In its decision dated April 28, 2005, the Board found that the building is 40 feet 8 inches in height, which exceeds the current limitation of 40 feet. In addition, there is an extended elevator shaft that extends an additional 9 feet 8 inches bringing the total height of the building to 50 feet 4 inches. The plans submitted by the Applicant indicated that the roof of the building is 42 feet in height and the extended elevator shaft is 52 feet in height. In either event, the building exceeds the height limit, was constructed prior to the adoption of the height limitation in the District and constitutes a lawful nonconforming building.

2. The Applicant proposes to mount a canister containing three antennas to the extended elevator shaft that will extend approximately 8 feet above the existing structure and to construct an equipment cabinet that will extend approximately 8 feet above the existing roof line.

3. The proposed installation is consistent with the policies set forth in Section 6.7.1 of the Zoning By-law including maximizing the use of existing buildings, encouraging co-location of equipment and concealing new equipment and the criteria set forth in Section 6.7.5 of the Zoning By-law.

4. The proposed installations is consistent with the general purposes of the Zoning By-law, is designed in a manner compatible with the existing natural features of the site, is compatible with the characteristics of the surrounding area and does not have a demonstrable adverse impact on the surrounding area.

5. The Applicant has complied with Section 6.7.6 of the Zoning By-law by obtaining approval from the Design Review Board.

6. The issuance of a special permit will not result in the violation of any dimensional, parking or intensity regulation with which the structure was theretofore in conformity.

7. The proposed installation will not be substantially more detrimental to the neighborhood than the existing nonconforming structure.

On the basis of the foregoing findings, following due and open deliberation, upon motion duly made and seconded, the Board by unanimous vote, grants the Applicant a

Special Permit under Section 1.4.6 and Section 6.7.3(b) of the Zoning By-law to install communications equipment on the roof of the existing building at 460 Hillside Avenue, substantially in accordance with the drawings prepared by Westcott and Mapes, Inc. submitted with the application and subject to the following conditions:

a) The Applicant shall comply with the provisions of Section 6.7.5 (where applicable), 6.7.8 and 6.7.9 of the Zoning By-law with respect to the installation and maintenance of the equipment.

b) The Applicant shall comply with the condition imposed by the Design Review Committee, on June 2, 2004, that the structures be painted gray.

Michael A. Crowe, Chairman

Jon D. Schneider, Member

Jonathan D. Tamkin, Member

RECEIVED TOWN CLERK
NEEDHAM, MA 02492
2005 MAY 20 AM 11:56

TOWN OF NEEDHAM
MASSACHUSETTS
**BOARD OF APPEALS**
APRIL 28, 2005

NEW CINGULAR WIRELESS PCS LLC

Upon the application of New Cingular Wireless PCS LLC, 580 Main Street, Bolton, MA, tenant, to the Board of Appeals for a Special Permit under Section 1.4.6 of the Zoning By-law to allow telecommunication equipment on rooftop in the Industrial District at 460 Hillside Avenue, a public hearing was held at the John Eliot School, 135 Wellesley Avenue, Needham, MA on Thursday, April 28, 2005 in the evening, pursuant to notice thereof published in a local newspaper and mailed to all parties in interest.

Received with the application was a letter from Steven R. Kinley of Clough Harbour & Associates LLP, 313 Littleton Road, Chelmsford, MA, dated March 9, 2005, six sheets with site, structural and building information entitled "Cingular Wireless: Needham-Hillside Ave" dated 3-03-05, a letter dated March 30, 2005 from Steven R. Kinley with a supplemental packet, including Needham Design Review sheet, site photographs, Kathrein Antenna information, and coverage with and without proposed site.

Appearing before the Board was Scott Lacey of Anderson & Kreiger. He stated that New Cingular Wireless PCS LLC (the "Applicant") plans to attach 4 antennae to the façade at 460 Hillside Avenue (the " Premises"), with four on a 'sled' on the rooftop. These would be approximately nine feet tall, and set back nine feet from the roof edge, complying with rooftop installation. Ancillary equipment will be stored in the basement. Mr. Lacey stated that they have approval from the Design Review Board.

This request is before the Board of Appeals due to the fact that the building is nonconforming due to the height at 40' 8''. Mr. Lacey stated that the building was constructed in 1925, which predates the current zoning requirements, and is therefore a grandfathered nonconformity.

Received and entered into the record was a phone call from Pat Droney, 100 Rosemary Way, expressing concern about health issues related to the tower. Mr. Lacey stated that there will be no associated health problems with the antennae. The FCC has strict standards regarding emissions under the Telecommunications Act. Mr. Lacey stated that the DPH no longer reviews the antennas due to the stringent standards imposed by the FCC.

The Planning Board letter of April 28, 2005 stated "No Comment". No one appeared in favor or opposition to the proposal. The hearing closed at 7:55 p.m., and the Board proceeded to deliberate.

**DECISION:**

On the basis of the evidence presented at the hearing on the application of New Cingular Wireless PCS LLC (the "applicant") for a special permit under Section 1.4.6 or other applicable section of the Zoning By-law to allow telecommunications equipment on the rooftop in an Industrial District at 460 Hillside Avenue, the Board makes the following findings:

1. The premises is located in the Industrial District and improved with a three-story office building. The building is 40 feet 8 inches in height, which exceeds the current limitation of 40 feet. In addition, there is an exterior elevator shaft that extends an additional 9 feet 8 inches above the Premises, bringing the total height of the building to 50 feet 4 inches. However, the building was constructed in 1925, prior to the adoption of the height limitation in the District, and constitutes a lawful nonconforming building.

2. The applicant proposes to mount equipment on the roof, that will extend less than 10 feet above the roofline, and to mount antennae equipment on the elevator shaft. This meets the Design requirements of Section 6.7.6 of the By-law.

3. The proposed installation is consistent with the policies set forth in connection with the adoption of the Wireless Communications Facilities Towers Overlay District including maximizing the use of existing buildings and concealing new equipment. This installation meets all the requirements of Section 6.7.3.1(e) of the Zoning By-law.

4. The issuance of a special permit will not result in the violation of any dimensional, parking or intensity regulation with which the structure was theretofore in conformity.

5. The proposed installation will not be substantially more detrimental to the neighborhood than the existing nonconforming structure.

6. This permit is issued to the Applicant only, and may not be transferred, set over, or assigned by the Applicant to any other person or entity without prior written approval of the Board of Appeals following such hearing and notice, if any, as the Board, in its exclusive discretion, shall deem due and sufficient.

On the basis of the foregoing findings, following due and open deliberation, upon motion duly made and seconded, the Board by unanimous vote, grants the Applicant a

Special Permit under Section 1.4.6 of the Zoning By-law to install communications equipment on the roof of the existing building at 460 Hillside Avenue, substantially in accordance with the drawings dated March, 2005 submitted with the application.

Michael A. Crowe, Chairman

Jon D. Schneider, Member

Jonathan D. Tamkin, Member

TOWN CLERK
NEEDHAM

'02 APR 26 P1:36

TOWN OF NEEDHAM
MASSACHUSETTS
BOARD OF APPEALS
MARCH 21, 2002

## NEXTEL COMMUNICATIONS OF THE MID-ATLANTIC, INC.

Upon the application of Nextel Communications of the Mid-Atlantic, Inc., 40 Hartwell Avenue, Lexington, MA 02421, (the "applicant") to the Board of Appeals for a Special Permit under Section 6.7.3.1 (e) (b) of the Zoning By-law to allow installation of a wireless communication facility, façade and roof mounted, which does not meet the setback requirement at 460 Hillside Avenue, a public hearing was held at the Stephen Palmer Senior Center, 83 Pickering Street, Needham, MA on Thursday, February 21, 2002 in the evening pursuant to notice thereof published in a local newspaper and mailed to all persons in interest.

The Board received a facsimile transmission from the Applicant dated February 21, 2002 requesting a continuation.. The Board therefore announced to the public that the continuation for the matter was set for March 21, 2002 at the Stephen Palmer Senior Center. Public notice was posted at the Town Clerk's office.

On March 21, 2002 the Board received a facsimile transmission from the Applicant requesting a withdrawal of the application without prejudice. At 8:15pm, the Board entered into the record the letter received from the Applicant. The Board, upon motion duly made and seconded, unanimously voted to allow the application to be withdrawn without prejudice.

William J. Tedoldi, Chairman

Michael A. Crowe, Member

Jon D. Schneider, Member

BOA/460 HILLSIDE AVENUE

**LEGAL NOTICE**
**TOWN OF NEEDHAM**
**BOARD OF APPEALS**
**NOTICE OF HEARING**

Public notice is hereby given that **Nextel Communications of the Mid-Atlantic, Inc., 40 Hartwell Avenue, Lexington, MA 02421,** tenant, has made an application to the Board of Appeals for a special permit under Section 6.7.3.1(e)(b) of the Zoning By-law to allow installation of wireless communication facility, facade and roof mounted, which does not meet setback requirement at **460 Hillside Avenue.**

Upon said notice, a public hearing will be held at the **Stephen Palmer Senior Center, 83 Pickering Street, Needham, MA** on **Thursday, February 21, 2002** in the evening **at 7:30 pm,** at which place and time all persons interested may appear and be heard.

AD#780988
Needham Times 2/7, 2/14/02

RECEIVED
TOWN CLERK
NEEDHAM

'01 MAY -3 A11:13

TOWN OF NEEDHAM
MASSACHUSETTS
BOARD OF APPEALS
APRIL 19, 2001

JAMES J. PALLOTTA

Upon the application of James J. Pallotta, 61 Bristol Road, Wellesley, MA, tenant, to the Board of Appeals for a special permit under Section 3.2.1 of the Zoning By-law for the storage of vehicles, namely, antiques and collectible pieces at 460 Hillside Avenue, with no work to be performed on the premises nor sales or exhibition, a public hearing was held at the Stephen Palmer Senior Center, 83 Pickering Street, Needham, Mass. on Thursday, April 19, 2001, in the evening pursuant to notice thereof published in a local newspaper and mailed to all parties in interest.

Appearing on behalf of the applicant was Enrique Bellido, Lexington Avenue, Needham. He stated that the proposed arrangements are strictly for storage and all vehicles will be stored inside; no provisions are being made for a museum. Mr.Bellido plans to secure a permit from the Fire Department prior to the storage. He informed the Board that there will be approximately 20 vehicles stored inside.

Appearing with questions was Al Mendelssohn, 168 Pine Grove Street who owns a parcel near the premises and a new office building is planned for this site. He was concerned about water overflows reaching his property that might contain gasoline or oils leaking from the vehicles. He asked that some consideration for containment be written in the conditions of the special permit.

No one appeared in opposition. A letter from the Planning Board dated April 17, 2001, stated that it makes no comment. The hearing closed at 8:00 p.m. and the Board proceeded to vote.

Decision

On the basis of the evidence presented at the hearing on the application of James J. Pallotta (the "applicant") for a special permit under Section 3.2.1 of the Zoning By-law for the storage of vehicles, namely antique and collectible pieces, at 460 Hillside Avenue with no work to be performed on the premises nor sales or exhibitions, the Board makes the following findings:

**TOWN OF NEEDHAM**
**BOARD OF APPEALS**
**NOTICE OF HEARING**

Public notice is hereby given that **James J. Pallotta, 61 Bristol Road, Wellesley, MA,** tenant, has made application to the Board of Appeals for a special permit under Section 3.2.1 of the Zoning By-law for the storage of vehicles, namely, antiques and collectible pieces at **460 Hillside Avenue,** with no work to be performed on the premises nor sales or exhibition.

Upon said notice, a public hearing will be held at the **Stephen Palmer Senior Center, 83 Pickering Street, Needham, Mass. on Thursday, April 19, 2001,** in the evening at 7:30 p.m. at which place and time all interested parties may attend and be heard.

Needham Times
4/5,4/12/01

1. The premises is located in the Industrial Zone where a "commercial garage for the storage or repair of vehicles" and the "private parking of vehicles for compensation" are permitted upon issuance of a special permit.

2. The applicant proposes to store a collection of antique automobiles in the basement of the premises. The applicant does not intend to perform work on the premises, make sales on the premises, or exhibit the collection on the premises.

3. The proposed use is consistent with the general purposes of the Zoning By-law.

On the basis of the foregoing findings, following motion duly made and seconded, after due and open deliberation, the Board by unanimous vote grants the applicant a special permit under Section 3.2.1 for the storage of antique vehicles and collectible pieces at 460 Hillside Avenue subject to the following conditions:

1. No repair work is to be performed on the premises.

2. No sales or exhibitions are to take place on the premises.

3. Any oil or gas spill must be contained within the premises and shall not be transmitted through any drainage line, sump pump or other means to town sewage or to the adjacent properties.

William J. Tedoldi, Chairman

Michael A. Crowe, Member

Jon D. Schneider, Member

TOWN OF NEEDHAM
MASSACHUSETTS
BOARD OF APPEALS
AUGUST 21, 1997

Received Town Clerk
97 SEP -3 AM 8:20

NEEDHAM CHILDREN'S MUSEUM

Upon the application of Needham Children's Museum, 460 Hillside Avenue, Needham, Massachusetts, tenant, to the Board of Appeals for a special permit under Section 5.1.1.5 of the Zoning By-law to waive strict adherence to the requirements of Sections 5.1.2 and 5.1.3 and under Section to allow more than one non-residential use for property located at 460 Hillside Avenue, a public hearing was held at the Stephen Palmer Senior Center, 83 Pickering Street, Needham, Mass. on Thursday, August 21, 1997, in the evening pursuant to notice thereof published in a local newspaper and mailed to all persons in interest.

Chairman Tedoldi requested associate member Susan Glazer to serve in place of member Jon Schneider who was absent.

Appearing on behalf of the applicant was Robert Ernst, chairman of the building committee. He stated that the applicant has been waiting for a recommendation from the Planning Board as to the number of parking spaces required by the By-law for museum parking. After a study it made, the Planning Board recommended a total of 12-14 spaces, depending on the number of employees. It based this number on one parking space for every 250 square feet. Since this number exceeds the number of spaces the former tenant had, the applicant is asking for a waiver from the parking requirements.

In answer to a query from the Board as to the other occupants of the building at 460 Hillside Avenue, Mr. Ernst stated that there are several tenants including Riverside Community Mental Health, Needham Guidance Clinic, an electrical contractor, Asquith Corporation, Retail Control Solutions, an advertising agency as well as warehouse space. All parking spaces are in common with one another and there are no designated parking spaces for a particular business. The building contains approximately 40,000 square feet of space: warehouse--24,000 square feet and offices--14,000 square feet. Mr. Nielsen, owner of the building, stated that the occupancy permit calls for 63 spaces and the plot plan shows 65 spaces.

Mr. Ernst stated that the museum is moving into quarters recently vacated by Creative Movement Center which had 6-7 spaces; the Museum use would be less intense than the former tenant. Mr. Ernst presented to the Board several photographs of the premises as well as a parking space log taken recently of vacant parking spaces at varied times throughout the day.

**TOWN OF NEEDHAM**
**BOARD OF APPEALS**
**NOTICE OF HEARING**

Public notice is hereby given that **Needham Children's Museum, 460 Hillside Ave., Needham, Mass.**, tenant, has made application to the Board of Appeals for a special permit under Section 5.1.1.5 of the Zoning By-law to waive strict adherence to the requirements of Sections 5.1.2 (parking) and 5.1.3 (design) and under Section 3.2.1 to allow more than one non-residential use for property located at **460 Hillside Avenue.**

Upon said application, a public hearing will be held at the **Stephen Palmer Senior Center, 83 Pickering Street, Needham, Mass. on Thursday, August 21, 1997** in the evening at 9:00 p.m. at which place and time all persons interested may appear and be heard.

Needham Times
8/7, 8/14/97

Mr. Ernst continued that the use of the museum would be that of walk-through exhibit space. He stated that the hours of operation would be 10:00 a.m. to 5:00 p.m. Monday through Thursday; Friday 10:00 a.m. to 8:00 p.m.; Saturday 10:00 a.m. to 5:00 p.m.; and Sunday, noon to 5:00 p.m. He pointed out that the weekend would have the heaviest use, however, it should be busy from 2:30 p.m. to 5:00 p.m. through the week.

Mr. Nielsen stated that the parking area will be re-striped. Mr. Ernst summed up his comments by stating that the applicant is requesting a waiver from the parking requirements of 6-8 spaces.

Appearing in favor were Holly Rose, president of Creative Movement Center, who stated there never was a problem with parking, when she was a tenant, with the other uses on the property; Mindy Pasco-Anderson, a member of the Board of the Needham Heights Neighborhood Association who stated that the Board voted in support of the application. No one appeared in opposition. The Planning Board was unable to make a recommendation inasmuch as it will not be meeting before the time of this hearing. The hearing closed at 9:55 p.m. and the Board proceeded to deliberate.

Decision

On the basis of the evidence presented at the hearing on the application by the Needham Children's Museum (the "applicant") for a special permit under Section 5.1.1.5 of the Zoning By-law to waive strict adherence to the requirements of Section 5.1.2 (parking) and 5.1.3 (design) and under Section 3.2.1 to allow more than one non-residential use for property located at 460 Hillside Avenue, the Board makes the following findings:

1. The applicant proposes to operate a children's museum in the area of a multi-tenanted building at 460 Hillside Avenue. The area of the building in which the museum will be located previously contained the Creative Movement Center which, according to its director, is a more intensely used program for children. Other uses in the building include approximately 24,000 sq. ft. of warehouse space and approximately 14,000 sq.ft. of office space. The building abuts the MBTA tracks. Access to the site is via a long driveway from Hillside Avenue.

2. There is a common parking area for 65 cars along the front edge of the site; 63 spaces are required for the current uses. Many of the parking spaces are not used. The applicant submitted survey information as evidence of this fact, indicating that there would be sufficient parking available for the proposed museum.

3. The Planning Board has determined that the proposed museum use will require 12-14 parking spaces. Since the previous Creative Movement use had 6 assigned parking spaces, the proposed deficiency will be 6-8 parking spaces.

4. The hours of operation of the museum will be 10 a.m. to 5 p.m. Monday through Thursday and Saturday; 10 a. m. to 8 p.m. Friday; and noon to 5 p.m. on Sunday. It is anticipated that the peak periods will be on the weekend days when the other building tenants will be closed for business.

5. Any incremental increase in traffic on Hillside Avenue as a result of the operation of the proposed museum will be negligible and will be during off-peak hours.

6. The proposed children's museum will be replacing another child oriented business which has existed safely on the premises and harmoniously with other tenants in the building for many years.

7. The proposed use of the premises by the applicant as described above is in harmony with the general purpose and intent of the Zoning By-law.

On the basis of the foregoing findings after due and open deliberation following a motion duly made and seconded, the Board, by unanimous vote, grants the applicant a special permit to waive the parking and design requirements and to allow more than one non-residential use in the building at 460 Hillside Avenue to operate a children's museum as described in the findings above, subject to the following conditions:

1. The applicant may use the premises to operate a children's museum pursuant to this special permit from 10 a.m. to 5 p.m. Monday through Thursday and Saturday; 10 a.m. to 8 p.m. on Friday; and noon to 5 p.m. on Sunday.

2. This special permit may not be transferred, set over, or assigned without the prior written approval of the Board, upon such notice and hearing as the Board in its discretion shall deem necessary or appropriate.

William J. Tedoldi, Chairman

Michael A. Crowe, Member

Susan M. Glazer, Associate Member

TOWN OF NEEDHAM
MASSACHUSETTS
BOARD OF APPEALS
JULY 16, 1991

RECEIVED
TOWN CLERK
NEEDHAM

'91 AUG 14 P1:18

CREATIVE MOVEMENT CENTER, INC.

Upon the application of Creative Movement Center, Inc., 1329 Highland Avenue, Needham, Massachusetts, tenant, to the Board of Appeals for special permits under 1) Section 3.2 of the Zoning By-law to allow the operation of a school for exercise and gymnastics for children, and 2) Section 3.2 of the Zoning By-law to permit more than one use in a non-residential building at 460 Hillside Avenue, a public hearing was held at the Town Hall, Needham, Massachusetts on Tuesday, July 16, 1991 in the evening pursuant to notice thereof published in a local newspaper and mailed to all parties in interest.

Chairman Henkoff requested associate member Janice Hunt to serve in place of member Andrew Frieze who was absent.

Present on behalf of the applicant was Holly Pelletier, President and Treasurer of Creative Movement Center, Inc. and Benedict Horowitz, Esq., 281 Chestnut Street, Needham, Mass. Mr. Horowitz presented to the Board a "Memorandum in Support of Application for the Issuance of a Special Permit, 460 Hillside Avenue." He also presented a letter dated July 8, 1991 from Gary W. Petrini, owner of the locus, stating his intent to enter into a lease with the applicant.

Mr. Horowitz stated that the applicant has been conducting the school at 1329 Highland Avenue for the past eleven years and now seeks a larger space with better access and parking. The new location, which in the past has been used as a warehouse, will provide 2950 square feet of space and a parking lot containing 56 parking spaces for the entire building. At the present time there is another tenant in the building, Industrial Careers Institute. Creative Movement Center, Inc. will be the second business use in the non-residential building.

Ms. Pelletier explained her program to the Board. She stated that classes operate Monday through Friday from 9:00 a.m. to 5:00 p.m. and on Saturday from 8:30 a.m. to 12:30 p.m. During the weekday there are four classes in the morning and four classes in the afternoon with 8-12 students average in each class. There are two teachers on the premises at all times and one office person.

**TOWN OF NEEDHAM**
**BOARD OF APPEALS**
**NOTICE OF HEARING**

Public notice is hereby given that **Creative Movement Center, Inc., 1329 Highland Avenue, Needham, MA,** tenant, has made application to the Board of Appeals for a special permit under Section 3.2 of the Zoning By-law to permit more than one use in a non-residential building at **460 Hillside Ave.**

Upon said application, a public hearing will be held at the **Town Hall, Needham, MA on Tuesday, July 16, 1991** in the evening at **7:50 p.m.** at which time and place all persons interested may appear and be heard.

ID No. 157845
(DT 7/1, 7/8/91)

**TOWN OF NEEDHAM**
**BOARD OF APPEALS**
**NOTICE OF HEARING**

Public notice is hereby given that **Creative Movement Center, Inc., 1329 Highland Avenue, Needham, MA,** tenant, has made application to the Board of Appeals for a special permit under Section 3.2 of the Zoning By-law to permit more than one use in a non-residential building at **460 Hillside Ave.**

Upon said application, a public hearing will be held at the **Town Hall, Needham, MA on Tuesday, July 16, 1991** in the evening at **7:50 p.m.** at which time and place all persons interested may appear and be heard.

ID No. 157845
(DT 7/1, 7/8/91)

Ms. Pelletier also stated that most students are dropped off, that there are carpools and that there is traffic in and out all during the day. She

stated that the owner of the locus will assign her as many parking spaces as needed.

In answer to a query from the Board she stated that she does not require a license to operate from the State.

No one appeared in favor or in opposition to the application. A letter from the Planning Board dated July 12, 1991 stated that it makes no comment on the application. The hearing closed at 8:40 p.m. and the Board proceeded to deliberate.

Decision

1) Special Permit under Section 3.2 to Allow the Operation of A School

On the basis of the evidence presented at the hearing on the application by Creative Movement, Inc. for a special permit under Section 3.2 of the Zoning By-law to allow the operation of a school for exercise and gymnastics for children at 460 Hillside Avenue, the Board makes the following findings:

1. The school for exercise and gymnastics for children will occupy approximately 3000 square feet in a building presently used for equipment storage, maintenance, warehouse and industrial training.

2. The number of students at any particular time will be from 8 to 12 between the hours of 9:00 a.m. and 5:00 p.m. Monday through Friday and between the hours of 8:30 a.m. and 12:30 p.m. on Saturday. The school will not be open on Sundays. The children's ages will range from 8 months to 2nd grade levels.

3. Vehicles enter the premises from Hillside Avenue via a private way (Easy Street) which is dead-end and which affords a safe off-street drop-off and pick-up capability for the approximately 80% of children who are transported by parents or assigned adults.

4. There are 58 parking spaces allocated for use which is considered sufficient for the present level of tenancy in the premises.

5. The use of the premises as above described is in harmony with the general purposes and intent of the By-law.

On the basis of the foregoing findings, in open session, and by unaminous vote after motion duly made and seconded, the Board grants the applicant a special permit under Section 3.2 of the Zoning By-law to allow the operation of a school for exercise and gymnastics for children at 460 Hillside Avenue.

2) Special Permit under Section 3.2 for More than One Use in a Non-Residential Building

On the basis of the evidence presented at the hearing on the application by Creative Movement Center, Inc. for a special permit under Section 3.2 of the Zoning By-law to permit more than one use in a non-residential building at 460 Hillside Avenue, the Board makes the following findings:

1. Section 3.2 of the Zoning By-law requires a special permit to allow more than one use in a non-residential building.

2. The findings in the above decision for a special permit under Section 3.2 of the Zoning By-law to allow the operation of a school for exercise and gymnastics for children at 460 Hillside Avenue are herein incorporated by reference.

3. The use of the building by the petitioner is not detrimental to the other uses and is in compliance with all the other requirements of the By-law.

On the basis of the foregoing findings, in open session, and by unanimous vote after motion duly made and seconded, the Board grants the applicant a special permit under Section 3.2 of the Zoning By-law to permit more than one use in a non-residential building at 460 Hillside Avenue.

Hertz N. Henkoff, Chairman

William J. Tedoldi, Member

Janice G. Hunt

Janice Hunt, Associate Member

TOWN OF NEEDHAM
MASSACHUSETTS
BOARD OF APPEALS
JUNE 20, 1989

RECEIVED
TOWN CLERK
NEEDHAM

'89 JUL 24 A8:34

INDUSTRIAL CAREERS INSTITUTE

Upon the application of Industrial Careers Institute, c/o Junction Commercial Service, 40 Clyde Street, Needham, MA, tenant, to the Board of Appeals for a special permit under Section 3.2 of the Zoning By-law to allow a private (trade) school with a maximum enrollment of 20 students at any one time at 460 Hillside Avenue, a public hearing was held at the Town Hall, Needham, Massachusetts on Tuesday, June 20, 1989 in the evening pursuant to notice thereof published in a local newspaper and mailed to all interested parties.

Appearing with Nicholas Distaso and Albert Goodrow, principals, was Frank Segal, Esq., Mintz, Levin, Cohn, Ferris, Glovsky and Popeo, One Financial Center, Boston, Massachusetts.

Mr. Segal stated that the private trade school will teach heating, ventilation and air conditioning. The two principals have been in the business of servicing HVAC equipment for over 13 years and would now like to establish a school in the basement of the building at 460 Hillside Avenue. Mr. Segal continued that they will occupy 3,000 s.f. of space and will have 13 designated parking spaces for their exclusive use. Mr. Segal stated that there is enough parking for 50 vehicles on site.

The applicant stated that the owner of the locus will renovate the space to provide a classroom and a shop area. Mr. Segal stated that most of the classes will be held in the evening from 6:00 p.m. to 9:30 p.m. but that if the demand is there, classes will be held during the day from 9:00 a.m. to 4:00 p.m. Mr. Segal stated that class size is determined by the Department of Education and is based on square footage of space for the school.

No one appeared in favor or in opposition to the application; Elvira Palmerio, 245 Hunnewell Street was present. Chairman Henkoff read into the record a letter from the Planning Board dated June 16, 1989 which stated: "The Planning Board has no objection to the requested special permit, however, it suggests that the Board of Appeals assure itself that provisions of the Off-street Parking Requirements under Section 5.1.1, Applicability, and particularly Subsections 5.1.1.5 and 5.1.1.6 are not triggered by the proposed use of the premises." The hearing closed at 8:40 p.m.

TOWN OF NEEDHAM
BOARD OF APPEALS
NOTICE OF HEARING

Public notice is hereby given that **Industrial Careers Institute, c/o Junction Commercial Service, 40 Clyde Street, Needham, MA**, tenant, has made application to the Board of Appeals for a special permit under Section 3.2 of the Zoning By-law to allow a private (trade) school with a maximum enrollment of 20 students at any one time at **460 Hillside Avenue**.

Upon said application, a public hearing will be held at the **Town Hall, Needham, MA on Tuesday, June 20, 1989** in the evening at 7:40 p.m. at which time and place all persons interested may appear and be heard.

(DT)Jul.8

Decision

On the basis of the evidence presented at the hearing on the application of Industrial Careers Institute (the "applicant") for a special permit under Section 3.2 of the Zoning By-law to allow a private (trade) school at 460 Hillside Avenue, Needham, the Board makes the following findings:

1. Section 3.2 requires a special permit to allow a private school in a business district.

2. The trade school will be located in an existing building at 460 Hillside Avenue and will occupy approximately 3000 square feet. It will teach servicing of heating, ventilating and air conditioning equipment (HVAC).

3. The maximum student size for any class will be 20 students as limited by the Massachusetts Department of Education which is the licensing board. The class size is restricted based on the state classroom standards for the space available to be used by the trade school.

4. The site contains 50 parking spaces, 13 of which will be designated for the trade school. This parking space allocation is sufficient to meet the requirements of Section 5.1.2 part 12 which would require one space for each two students.

5. The hours of operation will be from 9:00 a.m. to 4:00 p.m. if demand develops, but expectations are that the prime demand will occur during the evening hours and as such, the school's prime hours of operation will be between 6:00 p.m. and 9:30 p.m. weekdays.

6. No abutters or other interested persons appeared to comment on the application. The Planning Board indicated no objections.

7. The issuance of a special permit will not be detrimental to the Town or to the general character and visual appearance of the surrounding neighborhood and abutting uses and is consistent with the intent of the Zoning By-law.

On the basis of the foregoing findings, by unanimous vote after motion duly made and seconded, the Board grants the applicant a special permit under Section 3.2 of the Zoning By-law to allow a portion of the building at 460 Hillside Avenue to be used for the operation of a private trade school with a maximum enrollment of 20 students at one time.

Hertz N. Henkoff, Chairman

Andrew D. Frieze, Member

John H. Cogswell, Associate Member

# ZBA Application For Hearing

Applicants must consult with the Building Commissioner prior to filing this Application. *Failure to do so will delay the scheduling of the hearing.*

## Applicant Information

| | | | |
|---|---|---|---|
| Applicant Name | Corbin Petro and Jessica Gelman | | Date: 11/28/23 |
| Applicant Address | 320 Grove Street, Needham, MA 02492 | | |
| Phone | 617-792-4840 | email | Corbin.petro@gmail.com |

Applicant is ☑ Owner; ☐Tenant; ☐Purchaser; ☐Other_____

If not the owner, a letter from the owner certifying authorization to apply must be included

| | | | |
|---|---|---|---|
| Representative Name | | | |
| Address | | | |
| Phone | | email | |

RECEIVED TOWN CLERK NEEDHAM, MA 02492 2023 NOV 28 PM 4:3

## Subject Property Information

| | | | |
|---|---|---|---|
| Property Address | 320 Grove Street, Needham, MA 02492 | | |
| Map/Parcel Number | 220/03 | Zone of Property | SRA |

Is property within 100 feet of wetlands, 200 feet of stream or in flood Plain?

☑ Yes ☐No

Is property ☑ Residential or ☐Commercial

If residential renovation, will renovation constitute "new construction"?

☑ Yes ☐No

If commercial, does the number of parking spaces meet the By-Law requirement? ☐Yes ☐No

Do the spaces meet design requirements? ☐Yes ☐ No

Application Type (*select one*): ☐Special Permit ☑ Variance

# ZBA Application For Hearing

**Existing Conditions:** 3,291sf single-Family, 2-story brick colonial with an attached 2-car garage located on 204,803sf of an irregular lot in both Needham and Wellesley. The structure is located in the 50' foot wetland buffer zone and the majority of the property contains protected wooded wetlands, wildlife habitat and an intermittent stream. The house flooded currently creating a mold hazard.

**Statement of Relief Sought:** To demolish and reconstruct a single-family home with 3 car garage, landscaped with permeable hardscape and mitigation planting required by CC. Seeking a variance to preserve the allowable 15' side setbacks enjoyed prior to 2017 zoning amendment due to unusual soil and shape of the topography of the land.

**Applicable Section(s) of the Zoning By-Law:**

4.2.3, MGL40A, Section 10 and 7.5.3

**If application under Zoning Section 1.4 above, list non-conformities:**

| | Existing Conditions | Proposed Conditions |
|---|---|---|
| **Use** | **Res** | **Res** |
| **# Dwelling Units** | **1** | **1** |
| **Lot Area** *(square feet)* | **204803** | **204803** |
| **Front Setback** *(feet)* | **N/A** | **N/A** |
| **Rear Setback** *(feet)* | **95.4** | **84.7** |
| **Left Setback** *(feet)* | **15** | **17.5** |
| **Right Setback** *(feet)* | **20.7** | **15.3** |
| **Frontage** *(feet)* (in Wellesley 79.42')* | **n/a*** | **n/a*** |
| **Lot Coverage** *(%)* | **n/a** | **n/a** |
| **FAR** *(Floor area divided by the lot area)* | **n/a** | **n/a** |

*Numbers must match those on the certified plot plan and supporting materials*

# ZBA Application For Hearing

| Date Structure Constructed including additions: | Date Lot was created: |
|---|---|
| 1981 | 02/20/1968 |

| Submission Materials | Provided |
|---|---|
| Certified Signed Plot Plan of Existing and Proposed Conditions *(Required)* | yes |
| Application Fee, check made payable to the Town of Needham *(Required)* | yes |
| If applicant is tenant, letter of authorization from owner *(Required)* | n/a |
| Elevations of Proposed Conditions *(when necessary)* | yes |
| Floor Plans of Proposed Conditions *(when necessary)* | yes |

Feel free to attach any additional information relative to the application. Any memorandum or supplemental materials should be filed 48 hours before the hearing. Additional information may be requested by the Board at any time during the application or hearing process.

---

I hereby request a hearing before the Needham Zoning Board of Appeals. I have reviewed the Board Rules and instructions.

I certify that I have consulted with the Building Commissioner – 11/12/2013

☑ I will represent myself; or

Name_____ will represent me in connection with the application.

Date:__11/28/2023_____ Applicant Signature_____

*An application must be submitted to the Town Clerk's Office at townclerk@needhamma.gov and the ZBA Office at dcollins@needhamma.gov*

November 21, 2023

Town of Needham
Zoning Board of Appeals
Needham, Massachusetts 02492

Attn: Daphne M. Collins, Zonning Specialist

Re: Corbin Petro & Jessica Gelman, 320 Grove St, Needham, MA Variance Request

Dear Members of the Needham Board of Appeals,

We have been residents of Needham since February 2013 when we bought our home at 320 Grove St. When we purchased our home, it was **fully conforming** by law until the large house zoning amendment of June 2017. Given events that have rendered our house a threat to our public health and safety, these regulations have created a significant hardship and we are requesting a variance.

By way of background, there has been one previous owner of our house and, while they sent their kids to Wellesley schools, we love the town of Needham. Our property abuts wetlands and our property is more than 4.6 acres. Our 2 boys are at Newman Elementary. We have found the town welcoming to us as two married women and are active in the community, especially with youth sports as coaches.

We love that our home is surrounded by conservation lands. We love nature, the occasional deer, turkey, and quiet - and we enjoy going on adventures with our boys and teaching them about nature. When we moved, we were unaware of the many decades of flooding that existed. Our lovely backyard turns into a pond several times each spring and fall. Over the years, we've called on both Wellesley and Needham fire departments when the water threatened to breach our home. While stressful and frustrating, our home wasn't impacted until **July 2021** when the water breached our **finished basement** and we had 6 inches of water for 4 days.

The damage from the water was significant, both to our house and to us mentally. While we restored our basement at meaningful costs to us, we have ongoing worry about mold, especially with aging parents who have severe allergies and who visit us often. We invested in an engineering analysis to determine the best mitigation strategies to keep our home and health safe. We also have intense stress and anxiety at any rainstorm as we fear flooding and more disruption and damage.

The water issues have gotten progressively worse with new construction and development surrounding the property. We understand by review of public records that there were major concerns by the previous owners and neighbors when Beard Way was developed, largely due to the water issues. Properties being subdivided, like at 390 Grove St in recent years have only exacerbated the water issues. New development, in addition to poor maintenance and an inadequate discharge drain pipe that was built on private property (302 Grove St), put much of this out of our control.

We love our home and want to remain living here for many years to come. Our home is not a teardown - we've lived here for 10 years and remodeled it during that time. However, with health and safety as a concern, we feel the only choice we have to stay here is to replace our home with one on higher ground,

farther from the water/wetlands, and built with the waterproofing and technology required to keep the home safe. As nature lovers and with an appreciation for conservation, we made a commitment to invest in modifications that improve the current footprint and impact to wetlands, and the plan we submitted to ZBA for consideration was approved by the Conservation Commission in July 2023.

The plan approved by the Conservation Commission and that we have submitted for consideration by the ZBA includes building a new home. The new home has setbacks previously allowed in the SRA district, which were 15 feet as the home was built in 1981, before the new regulations from June 2017, when new setback limits were established. The current home at 320 Grove St has setbacks of 15ft and 20ft, on the left hand and right hand sides, respectively. The new home proposal has setbacks of 17ft and 15ft on the left hand and right hand sides, respectively. **Notably, the shortest distance between the proposed house and the house next door (306 Grove St, Wellesley) is approximately 55ft** because of the unusual shape of the lot, which adheres to the spirit of the regulations to ensure space between each home.

We believe the new home will significantly improve the property and neighborhood, and have full support of our neighbors to the right at 330 Grove St and to the left at 306 Grove St (we own this property, which is fully in Wellesley). When we embarked on this process in October 2022, we received assurances from the former building commissioner that we were **entitled by right** to the 15ft setbacks. It was these assurances that were the key criteria we used to develop our plan and decision to stay at the property. We understand now that a different interpretation of the regulations stands and so are requesting a variance.

We are requesting a variance based on Needham bylaw 7.5.3 and Massachusetts General Laws, c.40A, Section 10, which provides that variances may be granted when:

*"owing to circumstances relating to the soil conditions, shape, or topography of such land or structures and especially affecting such land or structures but not affecting generally the zoning district in which it is located, a literal enforcement of the provisions of the ordinance or by-law would involve substantial hardship, financial or otherwise, to the petitioner or appellant, and that desirable relief may be granted without substantial detriment to the public good and without nullifying or substantially derogating from the intent or purpose of such ordinance or by-law. "*

Applying the criteria of Chapter 40A, Section 10, the first question is whether there exist circumstances relating to the soil conditions, shape, or topography of the Premises or structures that especially affect the Premises but not generally the zoning district in which it is located.

The current non-conforming lot abuts wetlands and has a triangle-shaped lot that narrows as you move away from the wetlands. Our lot is 4.6 acres, plus a small portion in Wellesley, the vast majority of which is not buildable because of an intermittent stream, wetlands, woods and wildlife habitat. As we aimed to improve the property and preserve the wetlands, we moved our house forward. As we do that, the shape of the lot gets smaller, making the buildable lot by right essentially non-existent. With the approval from the Conservation Commission to build within the 25ft buffer zone, we have a buildable lot but require this variance. We meet the criteria for a variance as we have unusual soil conditions given our proximity to wetlands and an unusual shape with the triangle-shaped lot.
No other property in our area has such an unusual shape or limitations.

The next question pursuant to Chapter 40A, Section 10 is whether a literal enforcement of the provisions of the By-Law would involve substantial hardship, financial or otherwise. In this case, application of the By-Law to the Premises would render it non-buildable; yet the current house has existed on it for over 40 years. This would render the Premises unusable for any material purpose. As our current house is a risk to our public health, we have faced considerable hardship as we seek to create a livable home on our non-conforming lot. There is little doubt that this inflicts a tremendous hardship on our family, as we have lived at the property for 11 years and wish to continue living at the property in a manner safe for our two young sons and with frequent visits from older family members heavily impacted by mold allergies.

The last question to be asked pursuant to Chapter 40A, Section 10 is whether the requested relief may be granted without substantial detriment to the public good and without nullifying or substantially derogating from the intent or purpose of the by-law. In this case, the Premises has existed as a separate lot with an existing home for approximately 43 years. At present, minimal change is proposed for the lot itself, and no change is being proposed for its use. Therefore, issuance of a variance to allow for a new build that improves the wetlands conditions, overall neighborhood, and enables the family to live in a home not threatened by water damage does not present any apparent detriment and further does not nullify or substantially derogate from the intent or purpose of the By-Law.

We thank you for your consideration and hope that you will respect the setbacks that we have enjoyed since we purchased the house.

Respectfully,

Corbin Petro & Jessica Gelman

| ELEV STATION | EXISTING ELEVATION | PROPOSED ELEVATION |
|---|---|---|
| A | 165.5 | 171.0 |
| B | 167.0 | 171.0 |
| C | 169.0 | 171.0 |
| D | 169.3 | 171.0 |
| E | 169.3 | 171.0 |
| F | 169.8 | 171.0 |
| G | 170.2 | 170.6 |
| H | 170.2 | 170.0 |
| J | 170.2 | 169.5 |
| K | 170.2 | 168.0 |
| L | 170.0 | 167.5 |
| M | 170.0 | 166.5 |
| N | 170.0 | 166.5 |
| P | 170.0 | 166.5 |
| R | 170.0 | 166.5 |
| S | 170.0 | 166.5 |
| T | 170.0 | 166.5 |
| V | 170.0 | 166.5 |
| W | 170.0 | 167.0 |

| | | |
|---|---|---|
| X | 170.0 | 167.3 |
| Y | 170.3 | 168.0 |
| Z | 170.0 | 168.5 |
| AA | 169.5 | 171.8 |
| BB | 170.2 | 171.5 |
| CC | 170.2 | 172.0 |
| DD | 170.3 | 172.5 |
| EE | 170.3 | 172.7 |
| FF | 170.3 | 173.0 |
| GG | 170.2 | 173.3 |
| HH | 170.2 | 173.3 |
| JJ | 170.2 | 173.0 |
| KK | 170.2 | 173.0 |
| LL | 169.8 | 173.0 |
| MM | 169.7 | 173.0 |
| NN | 169.5 | 173.0 |
| PP | 169.3 | 172.2 |
| RR | 167.2 | 171.3 |

EXISTING
GRADE PLANE = 6278.1 / 37 = 169.68
TOC TO GRADE = 174.00 − 169.68 = 4.32
ALLOWABLE BUILDING = 35.00 − 4.32 = 30.68

PROPOSED
GRADE PLANE = 6296.5 / 37 = 170.18
TOC TO GRADE = 174.00 − 170.18 = 3.82
ALLOWABLE BUILDING = 35.00 − 3.82 = 31.18

BASED UPON COMPARATIVE ANALYSIS THE EXISTING GRADE PLANE PROVIDES MORE RESTRICTIVE ENVIRONMENT FOR THE BUILDING HEIGHT THE MAXIMUM ALLOWABLE STRUCTURE ABOVE THE TOP OF CONCRETE IS 30.68 FEET.

THE PROPOSED STRUCTURE FROM TOP OF CONCRETE TO RIDGE IS 30.33 FEET.
MAKING THE PROPOSED HEIGHT 34.65 FEET FROM THE EXISTING AVERAGE GRADE PLANE.

ZONING INFORMATION: SINGLE RESIDENCE A (SRA)

| | REQUIRED | EXISTING | PROPOSED |
|---|---|---|---|
| MINIMUM LOT AREA | 43,560 SF | 204,803 SF | 204,803 SF. |
| MINIMUM LOT FRONTAGE | 150 FEET | N/A FEET | N/A FEET |
| MINIMUM FRONT SETBACK | 30 FEET | N/A | N/A |
| MINIMUM SIDE YARD | 25 FEET* | 15.0 FEET* | 17.5 FEET* |
| | | 20.7 FEET | 15.3 FEET* |
| MINIMUM REAR YARD | 15 FEET | 95.4 FEET | 84.7 FEET |
| MAXIMUM BUILDING HEIGHT | 35 FEET | 30± FEET | 34.65 FEET |
| MAXIMUM BUILDING HEIGHT | 2 1/2 STORIES | 2 1/2 STORIES | 2 1/2 STORIES |

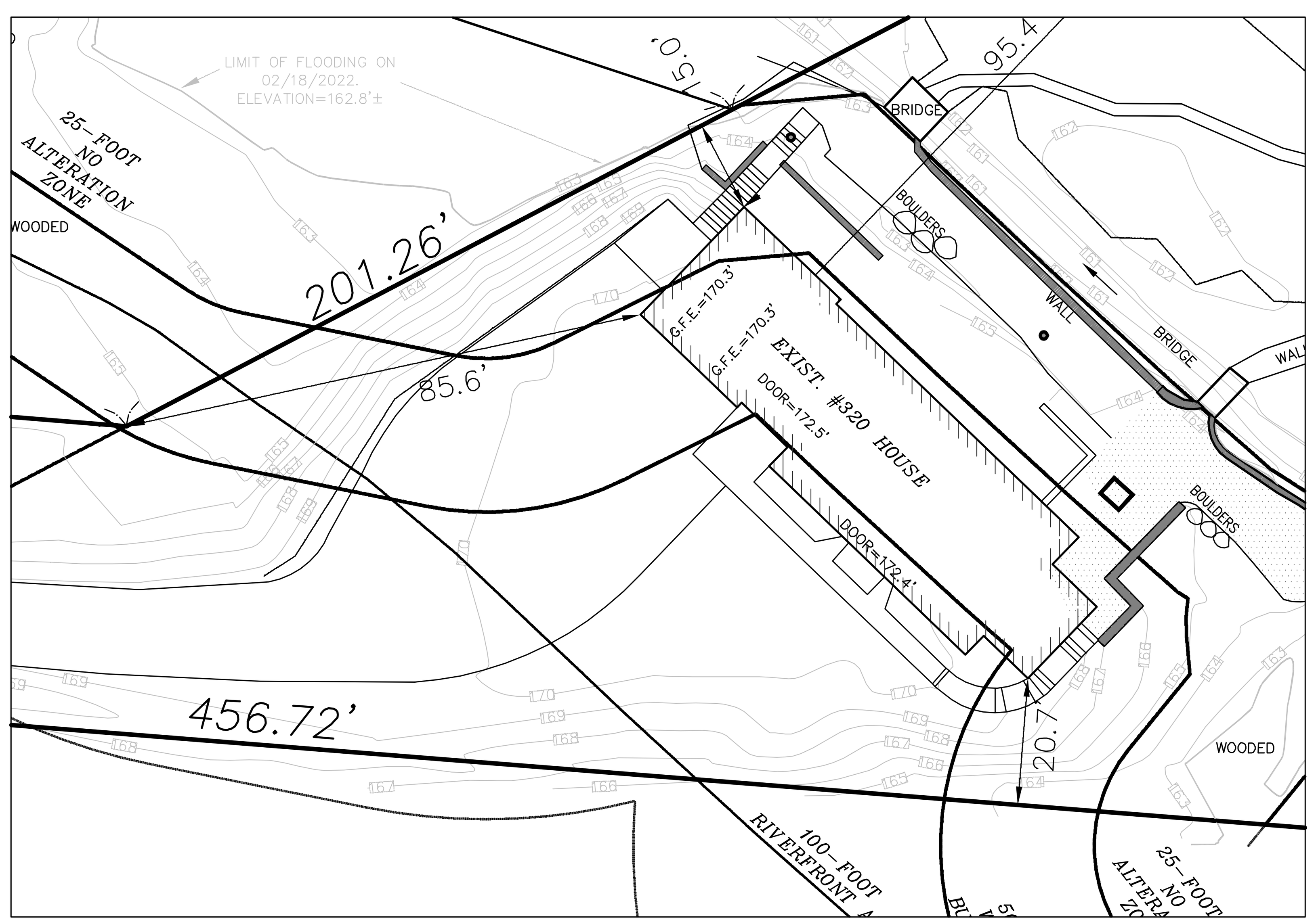


EXISTING SITE DETAIL

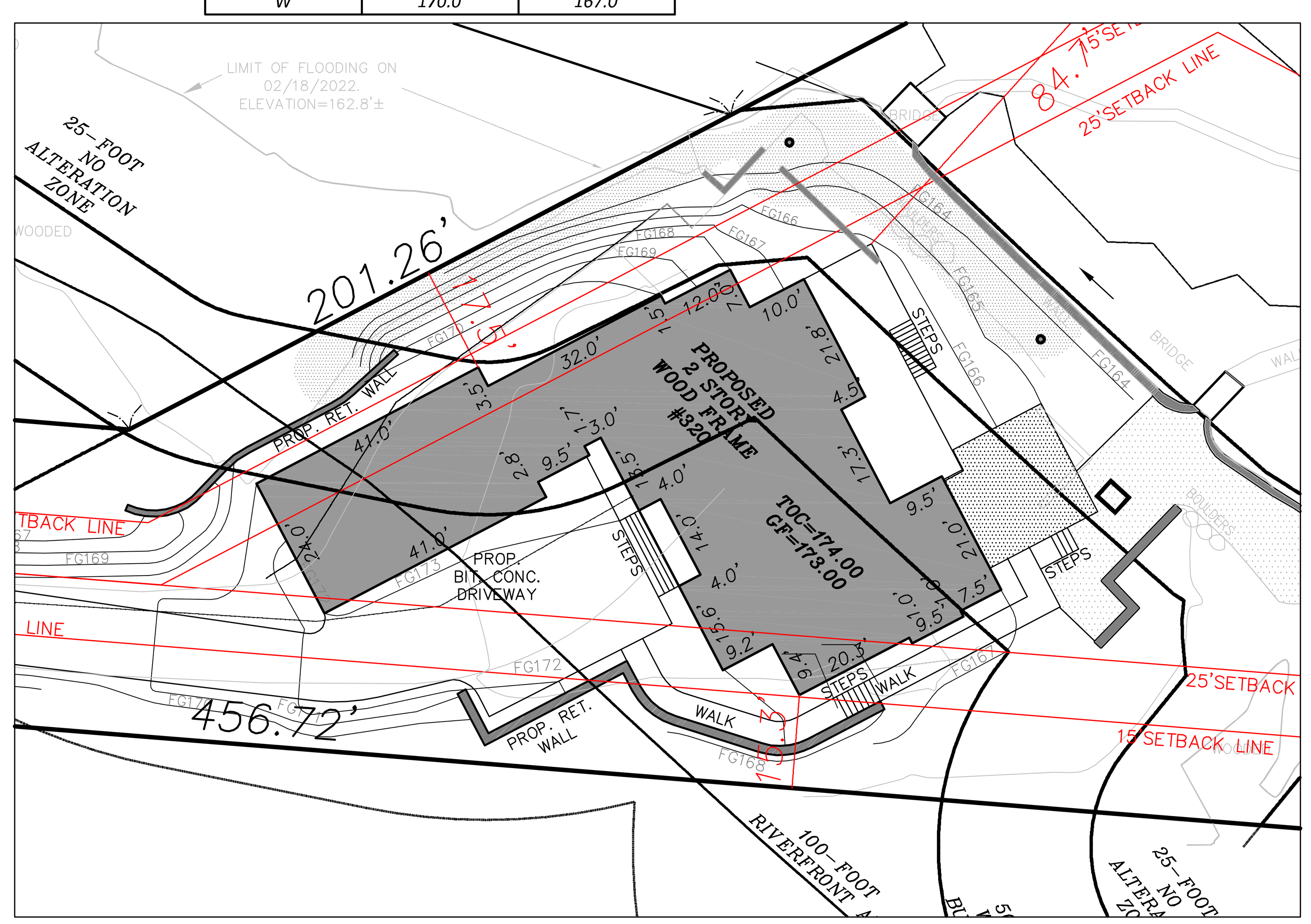


PROPOSED SITE DETAIL

COMMONWEALTH OF MASSACHUSETTS
BRADLEY SIMONELLI
#47581
PROFESSIONAL LAND SURVEYOR

GRAPHIC SCALE
40 0 20 40 80

ZONING BOARD OF APPEALS
PLAN OF LAND
320 GROVE STREET
NEEDHAM, MASS.

TOWN OF NEEDHAM
MAP 220 PARCEL 03

NORFOLK COUNTY
REGISTRY OF DEEDS
LAND COURT OF MASSACHUSETTS
CERTIFICATE NO. 84800
LAND COURT PLAN 8450E

CORBIN PETRO &
JESSICA GELMAN
320 GROVE STREET
WELLESLEY, MA

Field Resources, Inc.
LAND SURVEYORS
NOVEMBER 10, 2023 SCALE 1"=40'
P.O. BOX 324
AUBURN, MA
281 CHESTNUT ST.
NEEDHAM, MA.
781 444 5936
office@fieldresources.net

117–23

REFER TO DEP FILING FOR SPECIFIC INFORMATION ABOUT STORMWATER AND EROSION CONTROL

Copyright© by Field Resources, Inc. All rights reserved.

Copyright© by Field Resources, Inc. All rights reserved.

mckay architects

# New Residence
# 320 Grove
# Needham, MA

**August 16, 2023**

## GENERAL NOTES

**General:**
1. The governing building code for the design and construction is the Massachusetts State Building Code for 1& 2 family dwellings (9th edition).
2. Architectural drawings shall be used in conjunction with structural, mechanical, electrical and shop drawings.
3. The contractor shall confirm all dimensions and notify architect of any discrepancies, ambiguities, or inconsistences prior to proceeding with the work. The contractor shall also notify the architect, prior to proceeding with the work, if any construction needs to be adjusted due to field conditions.
4. An assumption has been made that the elevation difference between the garage slab and the first floor is 24" the general contractor shall notify the architect if this is inconsistent with the site conditions prior to beginning construction.
5. All flashing in contact with pressure treated lumber shall be corrosion resistant.
6. All ductwork and hot water piping shall be insulated and where necessary, a vapor barrier for the ductwork will be provided to prevent condensation.
7. All chimneys to be constructed so the top of the flue is 2'-0" above any roof/wall within 10'-0".
8. Provide continuous pitch break vents at all roof/wall intersections where soffit vents are installed.

**Dimensions:**
1. Dimensions standards within the documents are as follows unless otherwise noted:
   a. Dimensions to exterior walls are from outside face of a stud or concrete wall
   b. Dimensions at windows and exterior doors represents a dimension to the center of that opening from the center of another opening or the outside face of a stud or concrete wall.
   c. Interior dimensions at stud walls represents a dimension to the middle of the stud (unless interior wall is also an exterior wall, then dimension is to face of stud).
2. Interior dimensions at stairs represents a dimension to the finished face of the stair.
3. Dimensions/locations of walls enclosing tub/shower units, pre-manufactured fireplaces and all other built-ins must be confirmed with the fixture manufacturer for the required RO and attachment.
4. Dimensions depicting the building height, shown of the architectural and structural drawings are for the building and building components only. The overall building height depicted is from the 1st floor deck. The owner/G.C. is responsible for coordinating and establishing the grade relative to the 1st floor, to ensure compliance with zoning and building code height requirements.
5. All dimensions from existing surfaces are from face of existing surface.
6. Closet doors that are not dimensioned are typically centered within the closet.
7. All other doors that are not dimensioned are typically 4" to 6" (depending on the finish casing width) from face finish to the door opening on the butt side.
8. Dimensions locating cased openings are typically dimensioned to the center of that opening unless otherwise noted.

**Stairways/Balconies:**
1. Stairways shall not be less than 3'- 0" in clear width at all points above the permitted handrail height and below the required headroom height. Maximum riser height shall be 8 ¼", minimum tread depth shall be 4" with nosing not to exceed 1 ¼". Wider treads shall have a min depth equal to the straight run tread depth at a distance of 12" from the narrower side with a min. tread depth of 3" at any point. Minimum headroom shall be 6' 6" measured vertically from the sloped plane adjoining the tread nosing or from the floor surface of a landing or platform.
2. Handrails shall be provided on at least one side of each continuous run of treads or flight of stairs with 4 or more risers. Minimum height shall not be less than 34" with a maximum not to exceed 38". Handrails shall be continuous for the full length of the flight.
3. Guardrails, 36" minimum in height, shall be installed in floor, porch, and/or balcony area more than thirty (30) inches above a floor or grade below. Guardrails on open sides of stairs, with a total rise of more than thirty (30) inches above a floor or grade below, shall be not less than 34" in height measured vertically from the nosing of the treads. The maximum clear opening between rails, balusters, and floors shall not exceed four (4) inches.

*Exception:*
1. The triangular openings formed by the riser, tread and bottom rail of a guard at the open side of a stairway may be of such a size that a six inch (6) sphere cannot pass through. Openings for required guards on the sides of stair treads shall not allow a sphere 4-3/8 inches to pass through.

4. An insulated door shall be provided at the top of unfinished basement stairs or insulate the walls and the underside of stairs and provide an insulated door at the bottom of basement stairs.
5. An insulated door shall be provided at the top of attic stairs or insulate the walls and underside of stairs and provide an insulated door at the bottom of attic stairs. Emergency escape and rescue openings.

**Emergency Escape and Rescue Openings/Exterior Windows and Doors:**
1. Window sizes shown on the drawings are based generically and the owner (or general contractor where applicable) shall choose the final manufacturer. Window sizes shall be verified by the general contractor prior to ordering rough opening sizes shall be provided by the manufacturer.
2. Basements, habitable attics and every sleeping room shall have at least one operable emergency escape and rescue opening. Where basements contain more than one sleeping room, each shall have an emergency escape and rescue opening but adjoining areas shall nor require one. Emergency escape and rescue openings shall meet the following criteria:
   a. Sill height shall not be more than 44 inches above the floor.
   b. Where a door having a threshold below the adjacent ground elevation is used as an emergency escape and rescue opening and is provided with a bulkhead enclosure, the bulkhead shall provide direct access to the basement and when the bulkhead is fully opened it shall provide the minimum net clear opening of 5.7 square feet.
   c. Emergency escape and rescue openings with a sill elevation below the adjacent ground elevation shall be provided with a window well with a minimum horizontal area of 9 square feet and a minimum horizontal projection of 36". The window well shall allow the emergency escape and egress opening to be fully opened.
   d. All emergency escape and rescue openings shall have a minimum net clear opening of 5.7 square feet.

*Exceptions:*
1. Grade floor openings shall have a minimum net clear opening of 5.0 square feet
2. Double hung windows used for emergency escape shall be permitted to have a new clear opening of 3.3 square feet provided that at least one operable sash meets the minimum height and width requirements and operations constraints.

   e. The minimum net clear opening shall be 24 inches x 20 inches in either direction
   f. Emergency escape and rescue openings shall be operational from the inside without the use of key's or tools
   g. In dwelling units, where the opening of an operable window is located more than 72 inches above the finished grade or surface below, the lowest part of the clear opening of the window shall be a minimum of 24 inches above the finished floor of the room in which the window is located. Operable sections of windows shall not permit openings that allow passage of a 4 inch diameter sphere where such openings are located within 24 inches of the finished floor.

*Exceptions:*
1. Windows whose openings will not allow a 4 inch diameter sphere to pass through the opening when the opening is in its largest opened position
2. Openings that are provided with window fall prevention devices that comply with section R6123.
3. Openings that are provided with fall prevention devices that comply with ASTM F2040.
4. Windows that are provided with openings limiting devices that comply with section R6124.

**Egress:**
1. Stairways, ramps, exterior exit balconies, hallways and doors shall meet all minimum egress requirements.
2. All required exits shall be positively anchored to the primary structure to resist both vertical and lateral forces.
3. Enclosed accessible space under stairs shall have walls, under stair surface and any soffits protected on the enclosed side with ½" gypsum board.
4. Hallways shall be minimum of 3 feet clear
5. Egress from dwelling units shall be by means of two exit doors. The minimum normal width of at least one of the required exit doors shall be not less than 36" with a nominal height shall of six feet eight inches and side hinged. All other required exit doors shall not be less than 32" in nominal width or six feet eight inches in nominal height and may be sliding or side-hinged.
6. Egress through an attached garage is permitted provided that the attached garage is also provided with a 32" exit door
7. All other exterior doors in excess of the two required exit doors are not required to comply with these minimum dimensions.
8. All interior doors providing access to habitable rooms shall have a nominal width of 30 inches and nominal height of six feet 6 inches except bathrooms which are permitted to be 24 inches in nominal width.
9. A floor or landing shall be provided on each side of an exterior door. The width of each landing shall not be less than the door served and have a minimum dimension of 36 inches measured in the direction of travel.

**Minimum Room Requirements:**
1. Habitable rooms, hallways, corridors, bathrooms, toilet rooms, laundry rooms and basements shall have a ceiling height of not less than seven (7) feet measured from the finish floor to the lowest projection from the ceiling

*Exceptions:*
1. Beams and girders spaced not less than four (4) feet on center may project not more than six (6) inches below the required ceiling height
2. Ceilings in basements without habitable space may project to within six feet eight inches of the finished floor except that beams, girders, ducts and other obstructions may project to within six feet four inches of the finished floor.
3. Not more than 50% of the required floor area of a room is permitted to have a sloped ceiling less than seven feet in height with no portion of the required floor area less than five feet in height.
4. Bathrooms shall have a minimum ceiling height of six feet eight inches over the fixture and at the front clearance area for the fixtures. A shower or tub with a showerhead shall have a minimum ceiling height of six feet eight inches above a minimum 30" X 30" area at the showerhead.

2. Every dwelling shall have at least one habitable room with a gross floor area of at least 150 square feet
3. Other habitable rooms shall have a floor area of not less than 70 square feet except kitchens
4. Habitable rooms shall not be less than seven feet in any horizontal except kitchens
5. Portions of a room with a sloping ceiling measuring less than five (5) feet or a furred ceiling measuring less than seven (7) shall not be considered as contributing to the minimum required habitable area for that room.

**Roofing and Siding:**
1. Provide continuous 3' 0" wide fiberglass reinforced, bituthene, ice and water shield at all roof edges, centered on all valleys and at roof wall intersections carried 1' 0" up the wall (refer to manufacturers installation instructions).
2. Provide aluminum step flashing at roof/wall and roof/chimney intersections.
3. Provide aluminum flashing over all window and doors head trim and at the connection between all exterior walls and exterior decks.
4. Provide continuous soffit vents or continuous venter drip edge at all soffit overhangs
5. Provide15" felt under all roof shingles (unless specified otherwise).
6. Provide continuous ridge vents (unless specified as otherwise). See building elevation for extent.
7. All gutters and downspouts to be prefinished alum. Color to be selected by owner.

**Light/Ventilation and Insulation:**
1. All habitable rooms shall be provided with aggregate glazing of not less than 8% of the floor area being ventilated.

*Exceptions:*
a. The glazed areas need not be openable when the opening is not required to be an emergency escape and rescue opening and an approved mechanical ventilation system is provided capable of producing 0.35 air exchange per hour in the room or a whole-house mechanical ventilation system is installed capable of supplying outdoor ventilation air of 1.5 CFM per occupant with 2 for the first bedroom and one for every additional bedroom.
b. The glazed areas need not be provided in rooms where the above exception is met and artificial light is provided capable of producing an average illumination of six foot candles over the area of the room at a height of 30 inches.

2. All bathrooms, water closet compartments and other similar rooms shall be provided with aggregate glazing area of not less than three square feet, ½ of which must be openable.

*Exception:*
a. The glazed area shall not be required where artificial light and a mechanical ventilation system are provided. Ventilation air from the space shall be exhausted directly to the outside.

3. Attic ventilation with a ceiling vapor barrier, provide at least one (1) square foot of free area for each three hundred (300) square feet of ceiling area.
4. Attic ventilation without a ceiling ventilation vapor barrier, provide at least one (1) square foot of free area for each one hundred-fifty (150) square feet of ceiling area.
5. The contractor is responsible to provide a moisture barrier and properly insulate all walls and ceilings to air leakage into unconditioned spaces.
6. If mechanical, electrical or plumbing equipment is to be placed in attics, eves, overhangs and other similar unconditioned, uninsulated spaces, the contractor is responsible to provide a proper enclosure, insulation, direct ventilation, etc. to avoid moisture, condensation, freeze thaw, ice damming, and other similar issues.

**Plumbing:**
1. All sanitary lines within walls and floors adjoining living spaces are to be sound insulated.
2. All plumbing within wall or floor cavities which border unconditioned spaces are to be insulated and on the warm side of the cavity insulation to avoid freezing.

**Smoke and Carbon Monoxide Detectors/Alarms:**
1. Combination smoke and carbon monoxide alarms are acceptable provided said alarms have simulated voice and tone alarms the clearly distinguish between the two types of emergencies. If combination alarms are to be used than all required criteria for smoke and carbon monoxide detectors need to be met.
2. Fire departments are required to inspect, upon sale or transfer, all dwelling units for required smoke and carbon monoxide detectors.
3. Consumers shall check with local building and/or fire officials for accepted alarm types and locations for proper installation in accordance with all applicable codes and regulations.

**Smoke Alarms/Detectors:**
1. All one and two family dwellings shall be equipped with a household fire warning system. All devices shall be installed and maintained in accordance with all applicable codes, manufacturers instructions and listing criteria.
2. Smoke detectors are required to be permanently wired to an AC primary power source and shall have secondary (standby) power supplied from monitored batteries.
3. Where more than one smoke detector is required, all required detectors shall be installed so that the activation of any detector shall cause the alarm in all required smoke detectors in the dwelling unit to sound (min. 85 dba at 10 feet, 75 dba in bedrooms)
4. Smoke detectors shall be provided in the following locations:
   a. In the immediate vicinity of bedrooms
   b. In all bedrooms
   c. In each story of a unit (including basements & cellars) For each 1,200 sq.ft or part thereof
   d. Near the base of all stairs where such stairs lead to another occupied floor
5. Photo electric smoke detectors are required if located within 20 feet of a kitchen or bathroom
6. When one or more sleeping rooms are added or created to an existing dwelling, the entire building shall be provided with smoke detectors designed and located as required for new dwellings.

**Carbon Monoxide Alarms/Detectors:**
1. All one and two family dwellings shall be equipped with a household carbon monoxide warning system. All devices shall be installed and maintained in accordance with all acceptable codes, manufacturers instruction and listing criteria.
2. Carbon monoxide detectors shall be located on every level of the dwelling unit including basements and cellars (but not including crawl spaces and uninhabitable attics).
3. All alarm-sounding appliances shall have a minimum rating of 85 dba at 10 feet

**Heat Detectors:**
1. Heat detectors shall be installed in any integral or attached garage to the main house
2. A new addition attached garage to an existing dwelling installed in accordance with all applicable criteria. If the existing dwelling contains a fire detection system that is compatible with the garage heat detector, the garage heat detector shall be interconnect to the existing dwelling fire detection system. If the detector is not compatible than the detector shall be connected to a sounder or compatible heat detector containing a sounding device, located in the dwelling unit and within 20 feet of the nearest door to the garage
3. For flat-finished garage ceilings, the detector shall be located on or near the center of the garage ceiling. For vaulted/ slopped ceilings, the detector shall be placed in the approximate center of the vaulted space.
4. The required heat detector shall be listed for and required to be interconnected to all smoke detectors of the required household fire alarm system, such that the activation of the heat detector will activate all of the audible alarms of the household fire alarm system throughout the dwelling.

**Sprinklers:**
1. All one and two-family dwellings having an aggregate area greater than 14,400 square feet, including basements, but not including garages and unfinished attics shall be equipped with an automatic sprinkler system and shall be installed in accordance with NFPA 13D.

## GRAPHIC SYMBOLS

- 3 / A-3.1 — BUILDING CROSS SECTION
- 1 — DOOR NUMBER
- 106 — ROOM NUMBER
- A — WINDOW NUMBER
- ELEVATION DESIGNATION
- 5 / A-3.3 — SECTION REFERENCE
- NEW DOOR TO BE INSTALLED
- EXISTING DOOR TO REMAIN
- PARTITION TYPE
- NEW CONSTRUCTION
- EXISTING CONSTRUCTION
- DEMO CONSTRUCTION

## MATERIAL SYMBOLS

- BLOCKING
- CONCRETE
- EARTH
- BATT INSULATION
- GRAVEL
- WOOD
- DRYWALL
- TILE

## CODE

**GOVERNMENT BUILDING CODE**

**THE MASSACHUSETTS BUILDING CODE, 9TH EDITION**

## ABBREVIATIONS

| | |
|---|---|
| @ | AT |
| AFF | ABOVE FINISH FLOOR |
| ATTEN | ATTENUATING |
| BLDG | BUILDING |
| CH | CEILING HEIGHT |
| CL | CENTER LINE |
| CLR | CLEAR |
| COL | COLUMN |
| CONC | CONCRETE |
| CONT | CONTINUOUS |
| CPT | CARPET |
| CT | CERAMIC TILE |
| DIM | DIMENSION |
| DWG(S) | DRAWING(S) |
| EA | EACH |
| EIFS | EXT INSUL. FINISH SYSTEM |
| ELEC | ELECTRICAL |
| ELEV | ELEVATION |
| EQ | EQUAL |
| EWC | ELECTRICAL WATER COOLER |
| EXT | EXTERIOR |
| FC | FIRE CODE/FIRE CORE |
| FD | FLOOR DRAIN |
| FEC | FIRE EXTINGUISHER CABINET |
| FF | FINISHED FLOOR |
| FFE | FINISHED FLOOR ELEVATION |
| FIN | FINISH |
| FFL | FLUORESCENT LIGHTING |
| FOF | FACE OF FINISH |
| FOC | FACE OF CONCRETE |
| FOS | FACE OF STUD |
| FRT | FIRE RETARDANT TREATED |
| GC | GENERAL CONTRACTOR |
| GL | GLASS OR GLAZING |
| GWB | GYPSUM WALL BOARD |
| HC | HOLLOW CORE |
| HDWR | HARDWARE |
| HM | HOLLOW METAL |
| HOR | HORIZONTAL |
| HT | HEIGHT |
| HVAC | HEATING, VENT, A/C |
| HWH | HOT WATER HEATER |
| INSUL | INSULATION |
| INT | INTERIOR |
| L | LENGTH |
| LAV | LAVATORY |
| LH | LEFT HAND(ED) |
| MAX | MAXIMUM |
| MECH | MECHANICAL |
| MFR | MANUFACTURER |
| MD | MEDIUM DENSITY |
| MIN | MINIMUM |
| MO | MASONRY OPENING |
| MTL | METAL |
| NIC | NOT IN CONTRACT |
| NL | NIGHT LIGHT |
| NOM | NOMINAL |
| NTS | NOT TO SCALE |
| OC | ON CENTER |
| OD | OUTSIDE DIAMETER |
| OH | OPPOSITE HANDED |
| PLAM | PLASTIC LAMINATE |
| PLYWD | PLYWOOD |
| PT | PRESSURE TREATED |
| PR | PAIR |
| PT | PAINTED |
| QT | QUARRY TILE |
| R | RISER |
| RAD | RADIUS |
| REQ | REQUIRED |
| REF | REFERENCE |
| REV | REVISION(S) |
| RH | RIGHT HAND(ED) |
| RO | ROUGH OPENING |
| RTU | ROOF TOP UNIT |
| SA | SOUND ATTENTION BATTS |
| SD | SMOKE DETECTORS |
| SIM | SIMILAR |
| SPEC | SPECIFICATION |
| SQ | SQUARE |
| SQ FT | SQUARE FEET |
| SS | STAINLESS STEEL |
| STL | STEEL |
| STN | STAIN |
| SV | SHEET VINYL |
| T | TREAD |
| THK | THICKNESS |
| TP | TOILET PAPER DISPENSER |
| TYP | TYPICAL |
| UNO | UNLESS NOTED OTHERWISE |
| VCT | VINYL COMPOSITION TILE |
| VIF | VERIFY IN FIELD |
| VTR | VENT THROUGH ROOF |
| W/ | WITH |
| WC | WATER CLOSET |
| WD | WOOD |
| X-REF | CROSS REFERENCE |

## DRAWING INDEX


| | |
|---|---|
| T-1.1 | Title Sheet |
| T-1.2 | Zoning Compliance Sheet |
| A-1.1 | Basement Plan |
| A-1.2 | First Floor Plan |
| A-1.3 | Second Floor Plan |
| A-1.4 | Attic Floor Plan |
| A-1.5 | Roof Plan |
| A-1.6 | Solar |
| A-2.1 | Front Elevation |
| A-2.2 | Right Side Elevation |
| A-2.3 | Rear Elevation |
| A-2.4 | Left Side Elevation |
| A-3.1 | Finish, Door & Window Schedules & Specs. & Typical Wall Section |
| S-0.1 | Structural Notes |
| S-1.1 | Foundation Plan |
| S-1.2 | First Floor Framing Plan |
| S-1.3 | Second Floor Framing Plan |
| S-1.4 | Attic Floor Framing Plan |
| S-1.5 | Roof Framing Plan |


**New Residence**

**320 Grove Street**
**Needham, MA**

OWNER


mckay architects

35 Bryant Street
Dedham, MA 02026

p: 781.326.5400

www.mckayarchitects.net


REGISTERED ARCHITECT MICHAEL L. McKAY NO. AR 8947 COMMONWEALTH OF MASSACHUSETTS

| REV # | DATE | ISSUANCE |
|---|---|---|
| 1 | 11/03/22 | First Draft |
| 2 | 11/22/22 | Second Draft |
| 3 | 11/29/22 | Third Draft |
| 4 | 02/23/23 | Fourth Draft |
| 5 | 07/21/23 | Fifth Draft |
| 6 | 08/16/23 | Sixth Draft |


**OWNERSHIP & USE OF DOCUMENTS**

These drawings and specifications are the property and copyright of McKay Architects and shall not be used in whole or in part, or shall be assigned to a third party without the express written permission of McKay Architects.
Contractor to verify all information and dimensions in the field prior to start of construction and is to notify McKay Architects of any discrepancies


**Title Sheet**

| | |
|---|---|
| JOB NO | |
| DATE | 02/23/23 |
| DWG BY | |
| CKD BY | MLM |
| SCALE | AS NOTED |

**T-1.1**

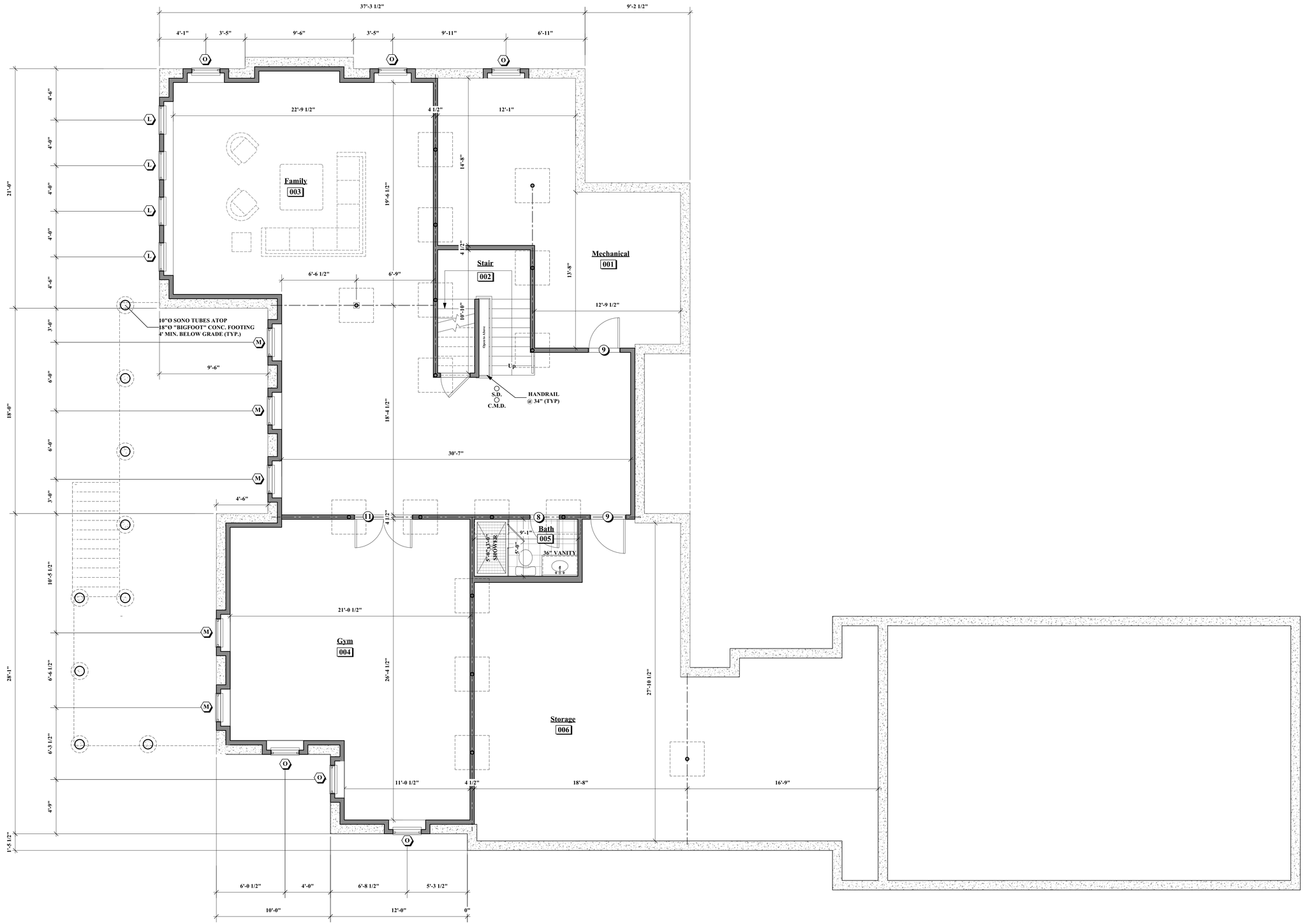


1 / A-1.1 Basement Floor Plan
1/4" = 1'-0"

**New Residence**

**320 Grove Street**
**Needham, MA**

OWNER


mckay architects

35 Bryant Street
Dedham, MA 02026

p: 781.326.5400

www.mckayarchitects.net


REGISTERED ARCHITECT
MICHAEL L. McKAY
NO. AR 8947
COMMONWEALTH OF MASSACHUSETTS

| REV # | DATE | ISSUANCE |
|---|---|---|
| 1 | 11/03/22 | First Draft |
| 2 | 11/22/22 | Second Draft |
| 3 | 11/29/22 | Third Draft |
| 4 | 02/23/23 | Fourth Draft |
| 5 | 07/21/23 | Fifth Draft |
| 6 | 08/16/23 | Sixth Draft |


**OWNERSHIP & USE OF DOCUMENTS**

These drawings and specifications are the property and copyright of McKay Architects and shall not be used in whole or in part, or shall be assigned to a third party without the express written permission of McKay Architects.

Contractor to verify all information and dimensions in the field prior to start of construction and is to notify McKay Architects of any discrepancies


**Basement Floor Plan**

JOB NO

DATE 02/23/23

DWG BY

CKD BY MLM

SCALE AS NOTED

**A-1.1**

| SQUARE FOOTAGE: | |
|---|---|
| GROSS | 3831 SF |
| LIVING | 2949 SF |
| GARAGE | 882 SF |

1 A-1.2 **First Floor Plan**
1/4" = 1'-0"

# New Residence

## 320 Grove Street
Needham, MA

OWNER


mckay architects

35 Bryant Street
Dedham, MA 02026

p: 781.326.5400

www.mckayarchitects.net


REGISTERED ARCHITECT MICHAEL L. McKAY NO. AR 6947 COMMONWEALTH OF MASSACHUSETTS

| REV # | DATE | ISSUANCE |
|---|---|---|
| 1 | 11/03/22 | First Draft |
| 2 | 11/22/22 | Second Draft |
| 3 | 11/29/22 | Third Draft |
| 4 | 02/23/23 | Fourth Draft |
| 5 | 07/21/23 | Fifth Draft |
| 6 | 08/16/23 | Sixth Draft |


OWNERSHIP & USE OF DOCUMENTS

These drawings and specifications are the property and copyright of McKay Architects and shall not be used in whole or in part, or shall be assigned to a third party without the express written permission of McKay Architects.

Contractor to verify all information and dimensions in the field prior to start of construction and is to notify McKay Architects of any discrepancies


# First Floor Plan

| | |
|---|---|
| JOB NO | |
| DATE | 02/23/23 |
| DWG BY | |
| CKD BY | MLM |
| SCALE | AS NOTED |

A-1.2

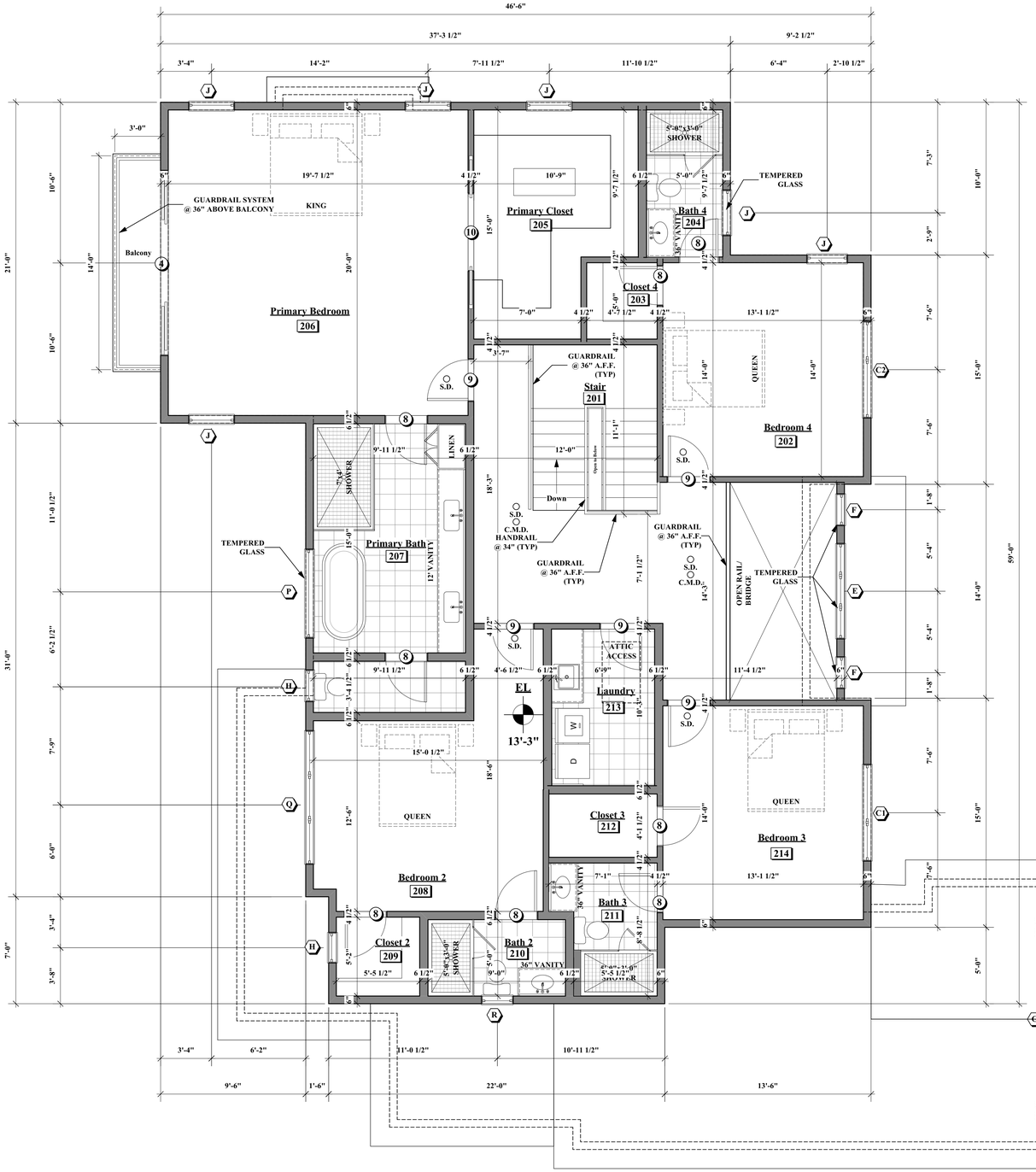


| SQUARE FOOTAGE: | |
|---|---|
| GROSS | 3172 SF |
| LIVING | 2188 SF |
| STAIRS/BASKETBALL: | 984 SF |

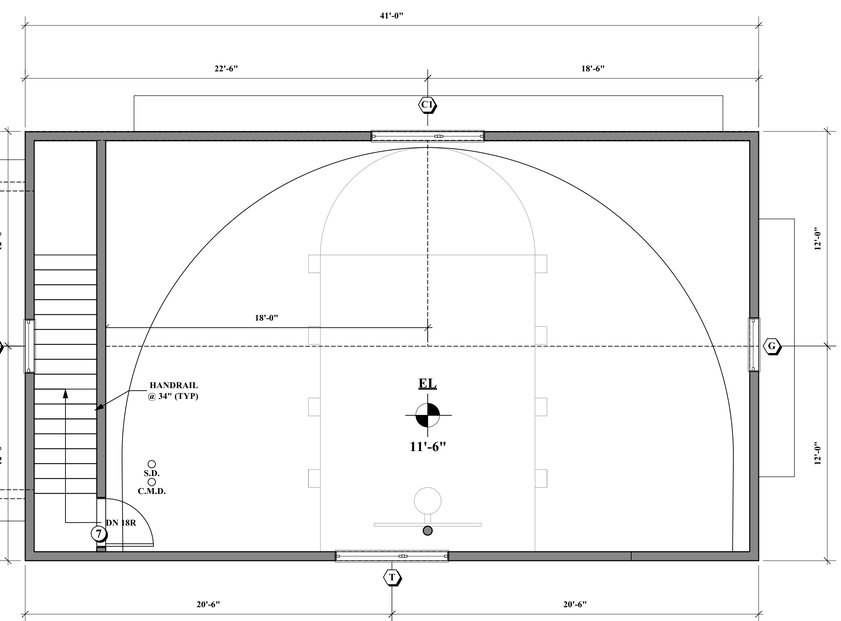


1 / A-1.3 **Second Floor Plan**
1/4" = 1'-0"

# New Residence

## 320 Grove Street
Needham, MA

OWNER


mckay architects

35 Bryant Street
Dedham, MA 02026

p: 781.326.5400

www.mckayarchitects.net


REGISTERED ARCHITECT
MICHAEL L. McKAY
NO. AR 6947
COMMONWEALTH OF MASSACHUSETTS

| REV # | DATE | ISSUANCE |
|---|---|---|
| 1 | 11/03/22 | First Draft |
| 2 | 11/22/22 | Second Draft |
| 3 | 11/29/22 | Third Draft |
| 4 | 02/23/23 | Fourth Draft |
| 5 | 07/21/23 | Fifth Draft |
| 6 | 08/16/23 | Sixth Draft |


**OWNERSHIP & USE OF DOCUMENTS**

These drawings and specifications are the property and copyright of McKay Architects and shall not be used in whole or in part, or shall be assigned to a third party without the express written permission of McKay Architects.

Contractor to verify all information and dimensions in the field prior to start of construction and is to notify McKay Architects of any discrepancies


# Second Floor Plan

| | |
|---|---|
| JOB NO | |
| DATE | 02/23/23 |
| DWG BY | |
| CKD BY | MLM |
| SCALE | AS NOTED |

A-1.3

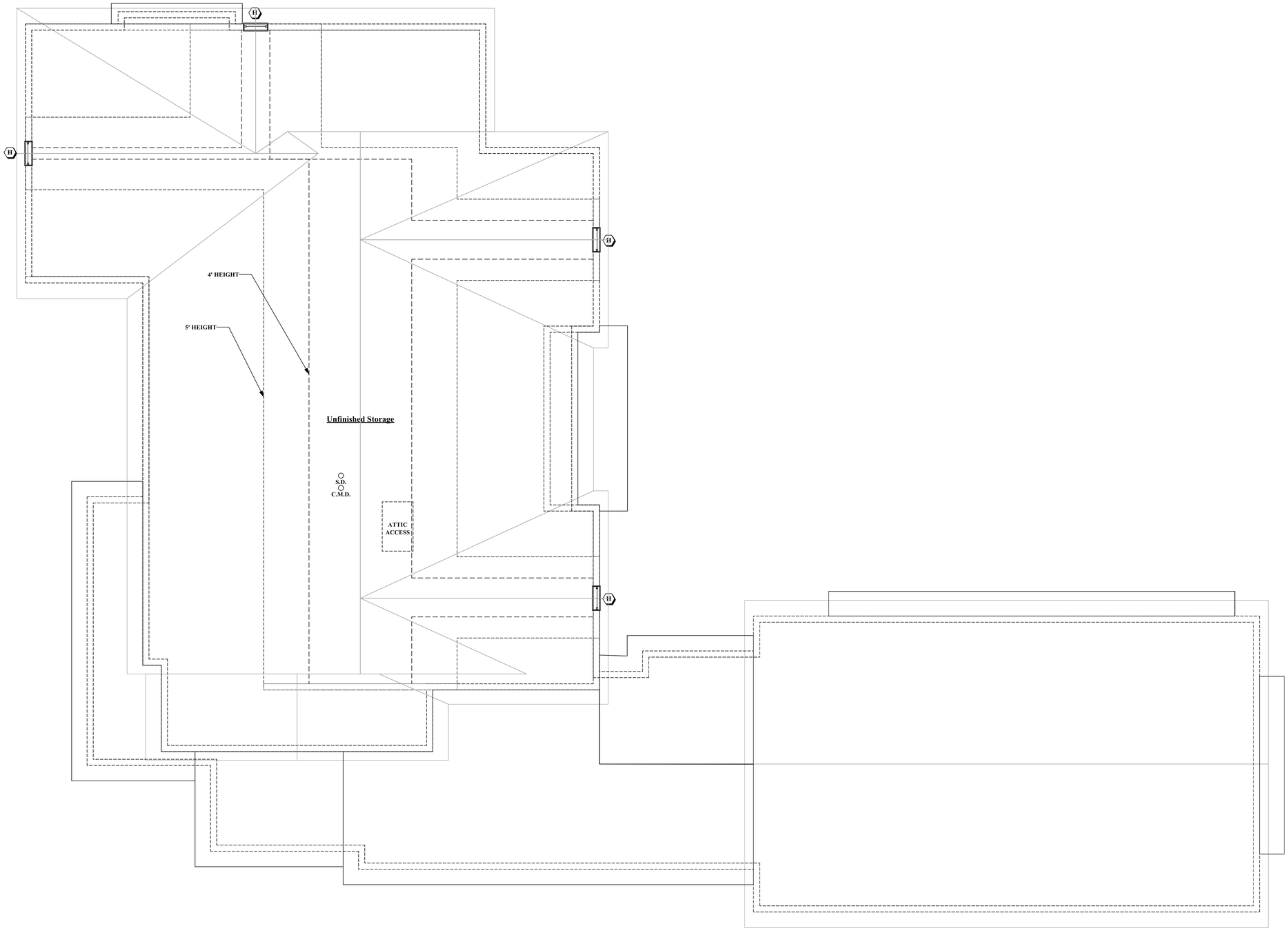


1
A-1.4

## Attic Floor Plan

1/4" = 1'-0"

**New Residence**

**320 Grove Street**
**Needham, MA**

OWNER


mckay architects

35 Bryant Street
Dedham, MA 02026

p: 781.326.5400

www.mckayarchitects.net


REGISTERED ARCHITECT
MICHAEL L. MCKAY
NO. AR 6947
COMMONWEALTH OF MASSACHUSETTS

| REV # | DATE | ISSUANCE |
|---|---|---|
| 1 | 11/03/22 | First Draft |
| 2 | 11/22/22 | Second Draft |
| 3 | 11/29/22 | Third Draft |
| 4 | 02/23/23 | Fourth Draft |
| 5 | 07/21/23 | Fifth Draft |
| 6 | 08/16/23 | Sixth Draft |


**OWNERSHIP & USE OF DOCUMENTS**

These drawings and specifications are the property and copyright of McKay Architects and shall not be used in whole or in part, or shall be assigned to a third party without the express written permission of McKay Architects.

Contractor to verify all information and dimensions in the field prior to start of construction and is to notify McKay Architects of any discrepancies


**Attic Plan**

| | |
|---|---|
| JOB NO | |
| DATE | 02/23/23 |
| DWG BY | |
| CKD BY | MLM |
| SCALE | AS NOTED |

**A-1.4**

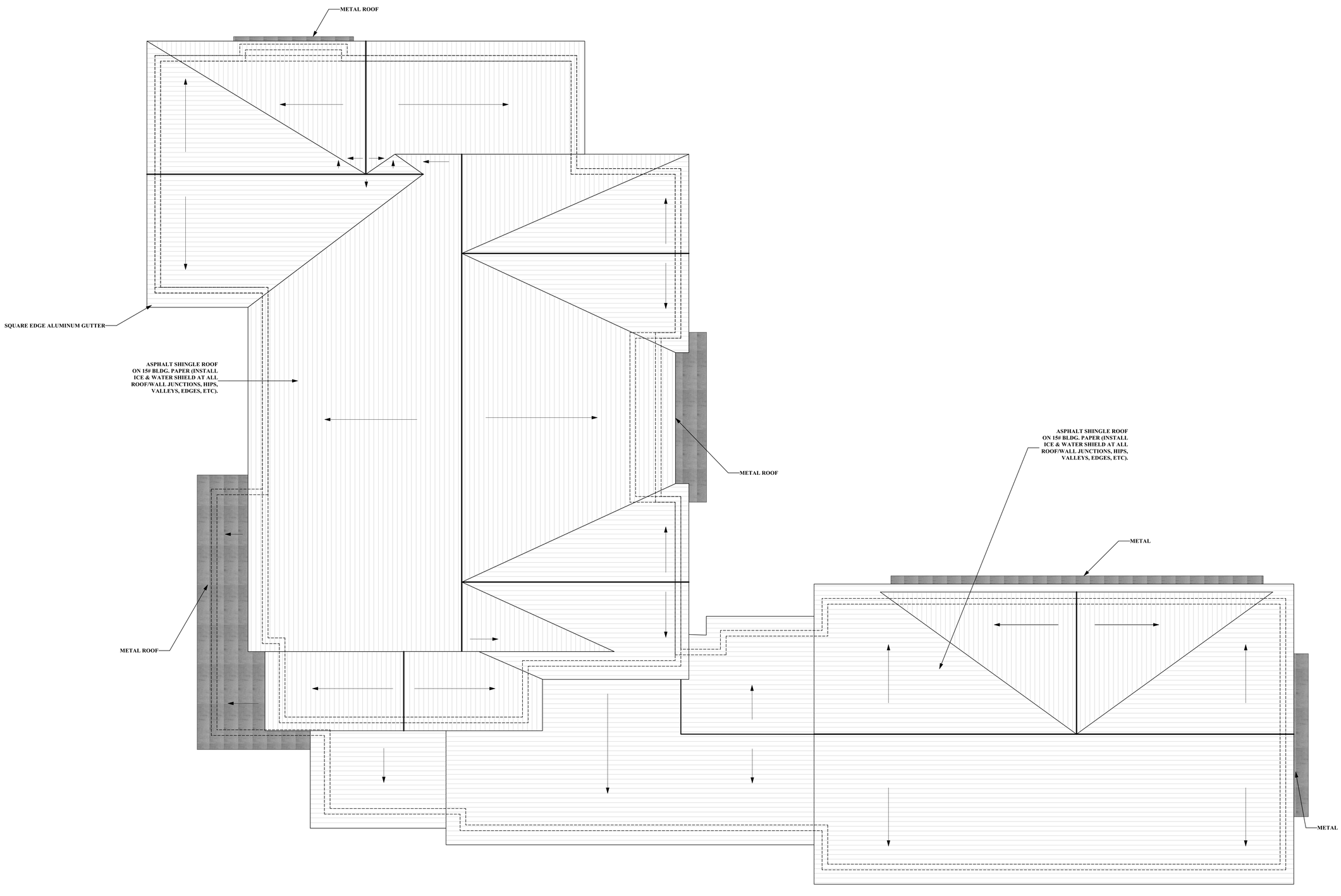


1 / A-1.5 **Roof Plan**
1/4" = 1'-0"

# New Residence

## 320 Grove Street
Needham, MA

OWNER


mckay architects

35 Bryant Street
Dedham, MA 02026

p: 781.326.5400

www.mckayarchitects.net


REGISTERED ARCHITECT MICHAEL L. McKAY NO. AR 6947 COMMONWEALTH OF MASSACHUSETTS

| REV # | DATE | ISSUANCE |
|---|---|---|
| 1 | 11/03/22 | First Draft |
| 2 | 11/22/22 | Second Draft |
| 3 | 11/29/22 | Third Draft |
| 4 | 02/23/23 | Fourth Draft |
| 5 | 07/21/23 | Fifth Draft |
| 6 | 08/16/23 | Sixth Draft |


OWNERSHIP & USE OF DOCUMENTS

These drawings and specifications are the property and copyright of McKay Architects and shall not be used in whole or in part, or shall be assigned to a third party without the express written permission of McKay Architects.

Contractor to verify all information and dimensions in the field prior to start of construction and is to notify McKay Architects of any discrepancies


# Roof Plan

| | |
|---|---|
| JOB NO | |
| DATE | 02/23/23 |
| DWG BY | |
| CKD BY | MLM |
| SCALE | AS NOTED |

A-1.5

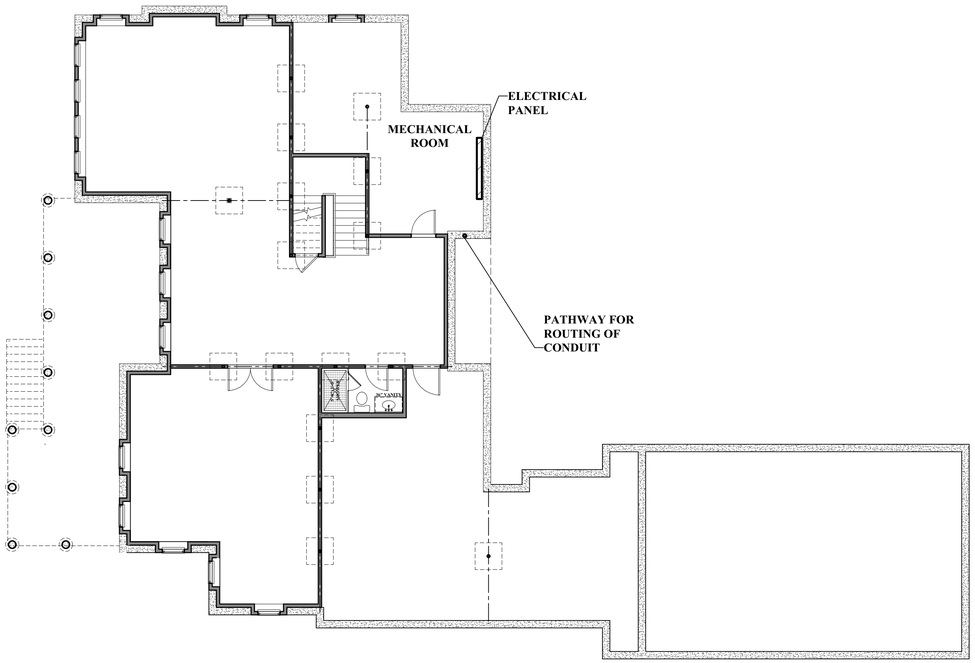


1 / A-1.1 **Basement Floor Plan**
1/8" = 1'-0"

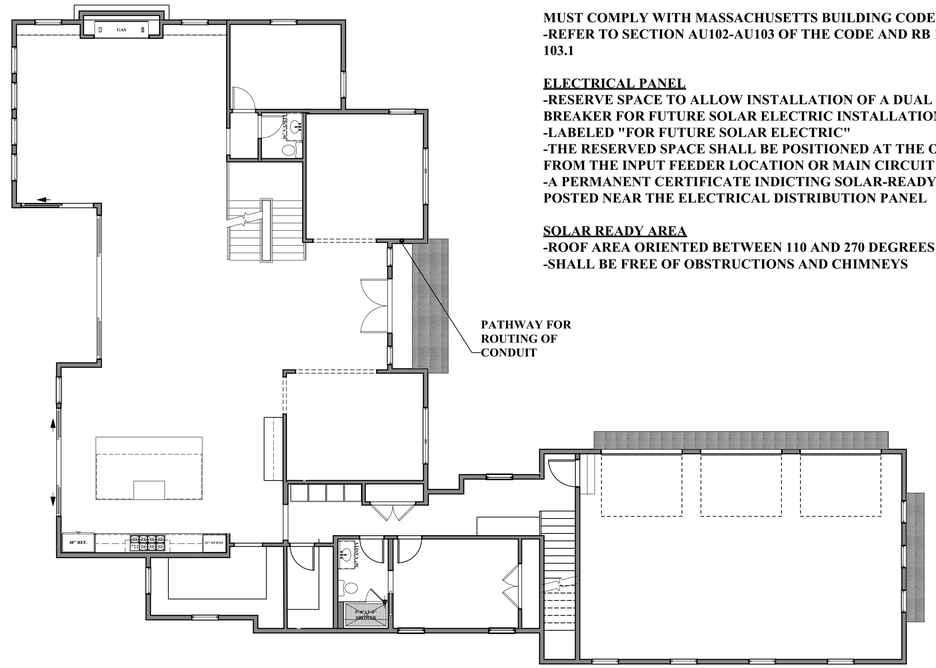


1 / A-1.2 **First Floor Plan**
1/8" = 1'-0"

MUST COMPLY WITH MASSACHUSETTS BUILDING CODE
-REFER TO SECTION AU102-AU103 OF THE CODE AND RB 103.5, 8, 9 & RB 103.1

ELECTRICAL PANEL
-RESERVE SPACE TO ALLOW INSTALLATION OF A DUAL POLE CIRCUIT BREAKER FOR FUTURE SOLAR ELECTRIC INSTALLATION
-LABELED "FOR FUTURE SOLAR ELECTRIC"
-THE RESERVED SPACE SHALL BE POSITIONED AT THE OPPOSITE END FROM THE INPUT FEEDER LOCATION OR MAIN CIRCUIT LOCATION
-A PERMANENT CERTIFICATE INDICTING SOLAR-READY ZONE SHALL BE POSTED NEAR THE ELECTRICAL DISTRIBUTION PANEL

SOLAR READY AREA
-ROOF AREA ORIENTED BETWEEN 110 AND 270 DEGREES OF TRUE NORTH
-SHALL BE FREE OF OBSTRUCTIONS AND CHIMNEYS

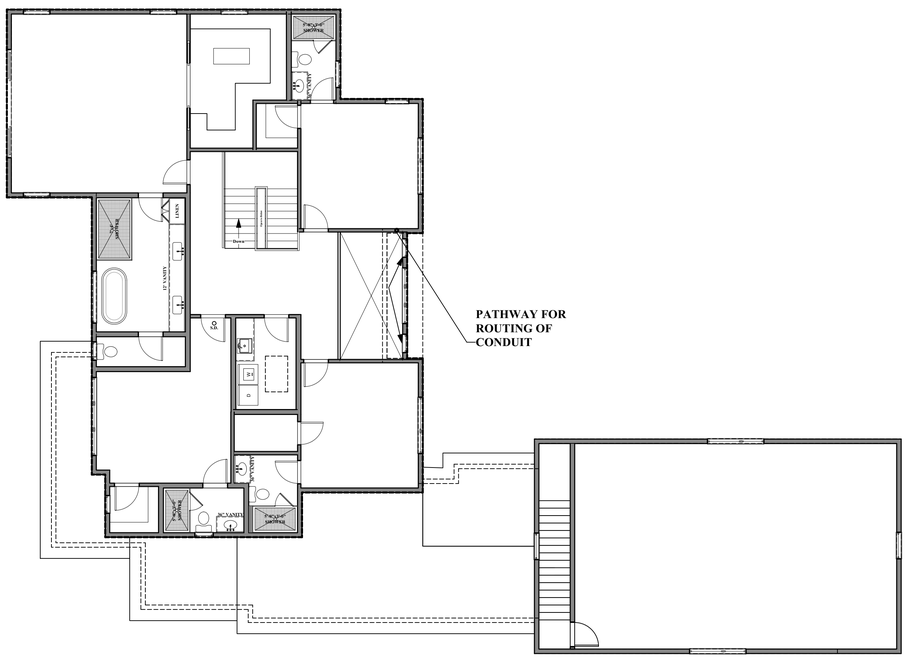


1 / A-1.3 **Second Floor Plan**
1/8" = 1'-0"

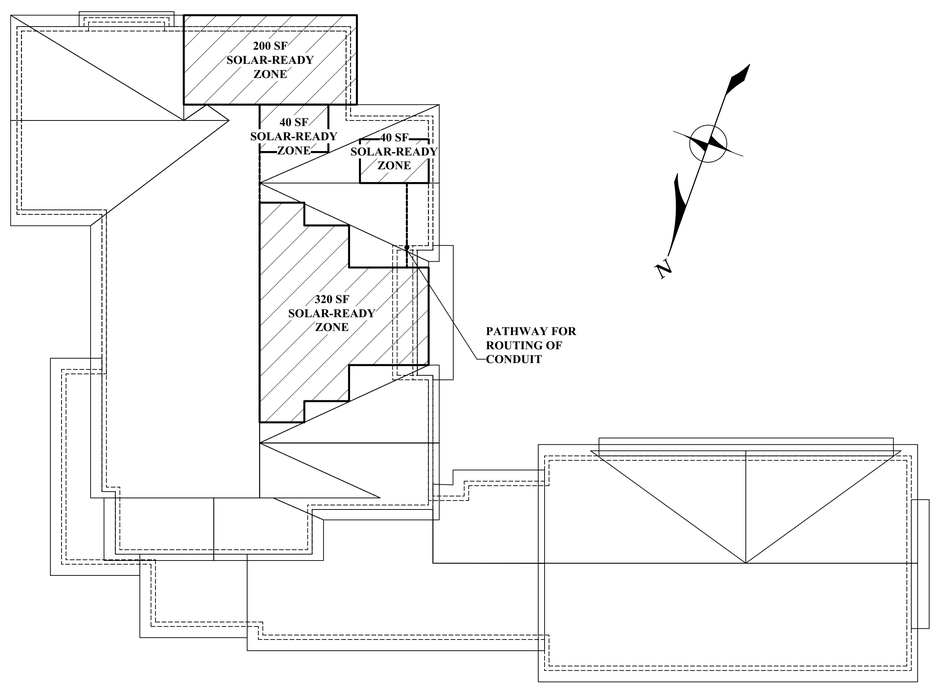


1 / A-1.4 **Attic/Roof Plan**
1/8" = 1'-0"

**New Residence**

**320 Grove Street**
**Needham, MA**

OWNER


mckay architects

35 Bryant Street
Dedham, MA 02026

p: 781.326.5400

www.mckayarchitects.net


REGISTERED ARCHITECT
MICHAEL L. McKAY
NO. AR 6947
COMMONWEALTH OF MASSACHUSETTS

| REV # | DATE | ISSUANCE |
|---|---|---|
| 1 | 11/03/22 | First Draft |
| 2 | 11/22/22 | Second Draft |
| 3 | 11/29/22 | Third Draft |
| 4 | 02/23/23 | Fourth Draft |
| 5 | 07/21/23 | Fifth Draft |
| 6 | 08/16/23 | Sixth Draft |


OWNERSHIP & USE OF DOCUMENTS

These drawings and specifications are the property and copyright of McKay Architects and shall not be used in whole or in part, or shall be assigned to a third party without the express written permission of McKay Architects.
Contractor to verify all information and dimensions in the field prior to start of construction and is to notify McKay Architects of any discrepancies


**Solar**

| | |
|---|---|
| JOB NO | |
| DATE | 02/23/23 |
| DWG BY | |
| CKD BY | MLM |
| SCALE | AS NOTED |

**A-1.6**

1 / A-2.1 Front Elevation
1/4" = 1'-0"

**New Residence**

**320 Grove Street**
**Needham, MA**

OWNER


mckay architects

35 Bryant Street
Dedham, MA 02026

p: 781.326.5400

www.mckayarchitects.net


REGISTERED ARCHITECT MICHAEL L. McKAY NO. AR 6947 COMMONWEALTH OF MASSACHUSETTS

| REV # | DATE | ISSUANCE |
|---|---|---|
| 1 | 11/03/22 | First Draft |
| 2 | 11/22/22 | Second Draft |
| 3 | 11/29/22 | Third Draft |
| 4 | 02/23/23 | Fourth Draft |
| 5 | 07/21/23 | Fifth Draft |
| 6 | 08/16/23 | Sixth Draft |


**OWNERSHIP & USE OF DOCUMENTS**

These drawings and specifications are the property and copyright of McKay Architects and shall not be used in whole or in part, or shall be assigned to a third party without the express written permission of McKay Architects.

Contractor to verify all information and dimensions in the field prior to start of construction and is to notify McKay Architects of any discrepancies


**Front Elevation**

| | |
|---|---|
| JOB NO | |
| DATE | 02/23/23 |
| DWG BY | |
| CKD BY | MLM |
| SCALE | AS NOTED |

**A-2.1**

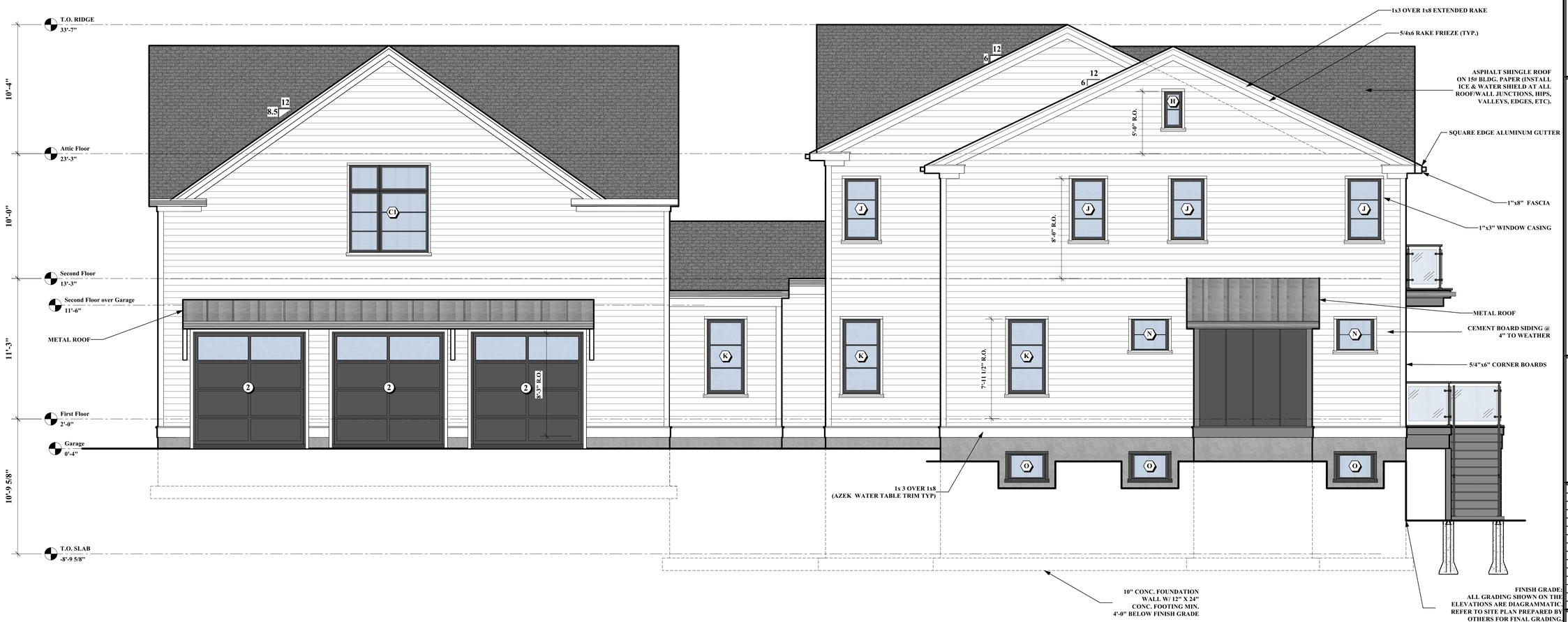


1 A-2.2 Right Side Elevation
1/4" = 1'-0"

# New Residence

## 320 Grove Street
Needham, MA

OWNER


mckay architects

35 Bryant Street
Dedham, MA 02026

p: 781.326.5400

www.mckayarchitects.net


REGISTERED ARCHITECT MICHAEL L. McKAY NO. AR 8947 COMMONWEALTH OF MASSACHUSETTS

| REV # | DATE | ISSUANCE |
|---|---|---|
| 1 | 11/03/22 | First Draft |
| 2 | 11/22/22 | Second Draft |
| 3 | 11/29/22 | Third Draft |
| 4 | 02/23/23 | Fourth Draft |
| 5 | 07/21/23 | Fifth Draft |
| 6 | 08/16/23 | Sixth Draft |


OWNERSHIP & USE OF DOCUMENTS

These drawings and specifications are the property and copyright of McKay Architects and shall not be used in whole or in part, or shall be assigned to a third party without the express written permission of McKay Architects.

Contractor to verify all information and dimensions in the field prior to start of construction and is to notify McKay Architects of any discrepancies


# Right Side Elevation

| | |
|---|---|
| JOB NO | |
| DATE | 02/23/23 |
| DWG BY | |
| CKD BY | MLM |
| SCALE | AS NOTED |

A-2.2

1 / A-2.3 Rear Elevation
1/4" = 1'-0"

**New Residence**

**320 Grove Street**
**Needham, MA**

OWNER


mckay architects

35 Bryant Street
Dedham, MA 02026

p: 781.326.5400

www.mckayarchitects.net


REGISTERED ARCHITECT MICHAEL L. MCKAY NO. AR 8947 COMMONWEALTH OF MASSACHUSETTS

| REV # | DATE | ISSUANCE |
|---|---|---|
| 1 | 11/03/22 | First Draft |
| 2 | 11/22/22 | Second Draft |
| 3 | 11/29/22 | Third Draft |
| 4 | 02/23/23 | Fourth Draft |
| 5 | 07/21/23 | Fifth Draft |
| 6 | 08/16/23 | Sixth Draft |


**OWNERSHIP & USE OF DOCUMENTS**

These drawings and specifications are the property and copyright of McKay Architects and shall not be used in whole or in part, or shall be assigned to a third party without the express written permission of McKay Architects.

Contractor to verify all information and dimensions in the field prior to start of construction and is to notify McKay Architects of any discrepancies


# Rear Elevation

| | |
|---|---|
| JOB NO | |
| DATE | 02/23/23 |
| DWG BY | |
| CKD BY | MLM |
| SCALE | AS NOTED |

**A-2.3**

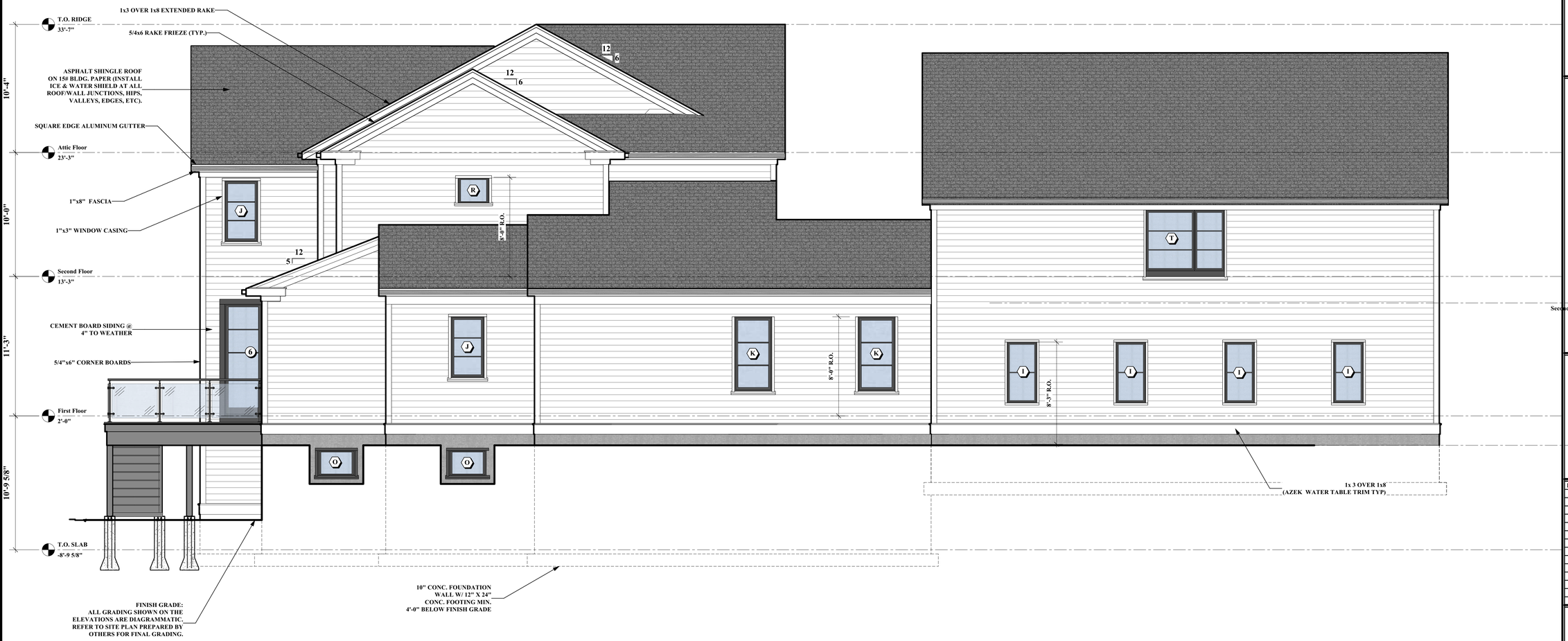


1 / A-2.4 Left Side Elevation
1/4" = 1'-0"

# New Residence

## 320 Grove Street
Needham, MA

OWNER


mckay architects

35 Bryant Street
Dedham, MA 02026

p: 781.326.5400

www.mckayarchitects.net


11'-0"
Second Floor over Garage

REGISTERED ARCHITECT
MICHAEL L. McKAY
NO. AR 8947
COMMONWEALTH OF MASSACHUSETTS

| REV # | DATE | ISSUANCE |
|---|---|---|
| 1 | 11/03/22 | First Draft |
| 2 | 11/22/22 | Second Draft |
| 3 | 11/29/22 | Third Draft |
| 4 | 02/23/23 | Fourth Draft |
| 5 | 07/21/23 | Fifth Draft |
| 6 | 08/16/23 | Sixth Draft |


OWNERSHIP & USE OF DOCUMENTS

These drawings and specifications are the property and copyright of McKay Architects and shall not be used in whole or in part, or shall be assigned to a third party without the express written permission of McKay Architects.

Contractor to verify all information and dimensions in the field prior to start of construction and is to notify McKay Architects of any discrepancies


# Left Side Elevation

| | |
|---|---|
| JOB NO | |
| DATE | 02/23/23 |
| DWG BY | |
| CKD BY | MLM |
| SCALE | AS NOTED |

A-2.4

## WINDOW SCHEDULE

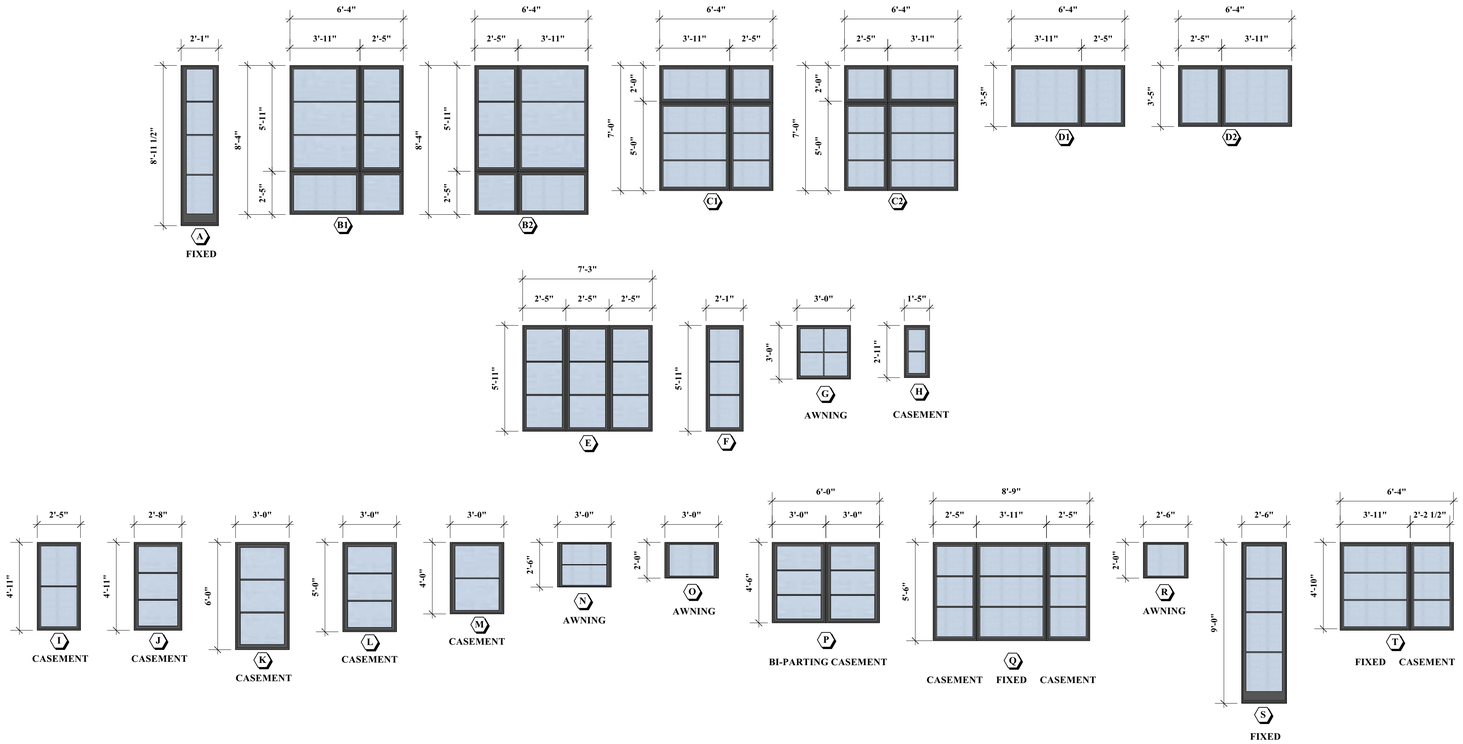


SHOP DRAWINGS OF WINDOWS ARE TO BE PROVIDED PRIOR TO ORDERING.

ALL WINDOWS AND PATIO DOORS ARE TO BE MANUFACTURED BY PELLA WINDOWS OR OWNER APPROVED EQUAL. PROVIDE SIMULATED DIVIDED LITE PATTERNS AS INDICATED. ALL UNITS ARE TO BE BLACK CLAD. UNITS ARE TO HAVE 6 5/16" JAMB THICKNESS & WHITE HARDWARE WITH FACTORY PROVIDED SCREENS. INTERIOR OF UNIT IS TO BE FACTORY PRIMED WHITE. PATIO DOORS ARE TO HAVE LOCKING HARDWARE PROVIDED WITH SCREEN DOOR UNITS. ALL GLAZING IS TO BE LOW-E INSULATED GLASS WITH U-VALUE OF .30 OR BETTER.

## DOOR SCHEDULE

| DOOR NO. | LOCATION / TYPE | SIZE | DETAILS HEAD | DETAILS JAMB | REMARKS |
|---|---|---|---|---|---|
| 1 | EXTERIOR / (ENTRY) | (2) 3'-0"x9'-0" | WOOD | WOOD | PAIR |
| 2 | EXTERIOR / (GARAGE) | 9'-0"x9'-0" | WOOD | WOOD | GARAGE OVERHEAD |
| 3 | EXTERIOR / (TYP) | 12'-0"x9'-0" | WOOD | WOOD | SLIDER |
| 4 | EXTERIOR / (PRIMARY BED) | 12'-0"x8'-0" | WOOD | WOOD | SLIDER |
| 5 | EXTERIOR / (GUEST BED) | 3'-0"x8'-0" | WOOD | WOOD | |
| 6 | EXTERIOR / (FAMILY) | 8'-0"x9'-0" | WOOD | WOOD | SLIDER |
| 7 | INTERIOR / GARAGE | 3'-0"x8'-0" | WOOD | WOOD | "C" LABEL DOOR |
| 8 | INTERIOR / (TYP) | 2'-6"x8'-0" | WOOD | WOOD | |
| 9 | INTERIOR / (TYP) | 2'-8"x8'-0" | WOOD | WOOD | |
| 10 | INTERIOR / (TYP) | (2) 2'-6"x8'-0" | WOOD | WOOD | BI-PARTING POCKET |
| 11 | INTERIOR / (TYP) | (2) 2'-6"x8'-0" | WOOD | WOOD | PAIR |
| 12 | | | | | |
| 13 | | | | | |
| 14 | | | | | |
| 15 | | | | | |
| 16 | | | | | |
| 17 | | | | | |
| 18 | | | | | |
| 19 | | | | | |
| 20 | | | | | |
| 21 | | | | | |
| 22 | | | | | |
| 23 | | | | | |
| 24 | | | | | |
| 25 | | | | | |
| 26 | | | | | |
| 27 | | | | | |
| 28 | | | | | |
| 29 | | | | | |
| 30 | | | | | |
| 31 | | | | | |
| 32 | | | | | |
| 33 | | | | | |
| 34 | | | | | |
| 35 | | | | | |

NOTE:

SHOP DRAWINGS OF DOORS ARE TO BE PROVIDED PRIOR TO ORDERING.

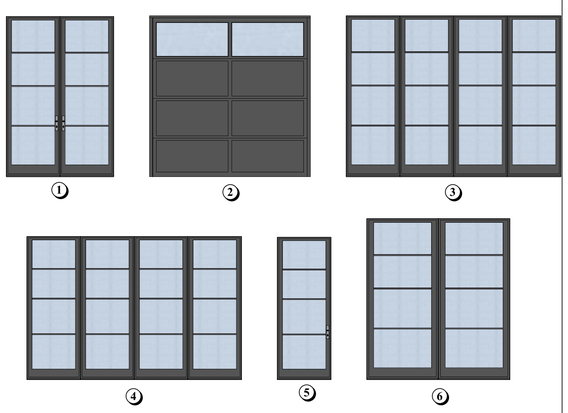


## FINISH SCHEDULE

| ROOM NO. | ROOM NAME | FLOOR | BASE | WALLS NORTH | WALLS EAST | WALLS SOUTH | WALLS WEST | CEILING | REMARKS |
|---|---|---|---|---|---|---|---|---|---|
| 001 | UNFINISHED/MECHANICALS | | | | | | | | |
| 002 | STAIR | WOOD | WOOD | GWB | GWB | GWB | GWB | GWB | |
| 003 | LOWER FAMILY | WOOD | WOOD | GWB | GWB | GWB | GWB | GWB | |
| 004 | GYM | WOOD | WOOD | GWB | GWB | GWB | GWB | GWB | |
| 005 | BATH | TILE | WOOD | GWB | GWB | GWB | GWB | GWB | |
| 006 | UNFINISHED / STORAGE | | | | | | | | |
| 101 | FOYER | WOOD | WOOD | GWB | GWB | GWB | GWB | GWB | |
| 102 | STAIR | WOOD | WOOD | GWB | GWB | GWB | GWB | GWB | |
| 103 | LIVING | WOOD | WOOD | GWB | GWB | GWB | GWB | GWB | |
| 104 | OFFICE | WOOD | WOOD | GWB | GWB | GWB | GWB | GWB | |
| 105 | POWDER | TILE | WOOD | GWB | GWB | GWB | GWB | GWB | |
| 106 | FAMILY | WOOD | WOOD | GWB | GWB | GWB | GWB | GWB | |
| 107 | KITCHEN | WOOD | WOOD | GWB | GWB | GWB | GWB | GWB | |
| 108 | PANTRY | WOOD | WOOD | GWB | GWB | GWB | GWB | GWB | |
| 109 | DINING | WOOD | WOOD | GWB | GWB | GWB | GWB | GWB | |
| 110 | MUD ROOM | WOOD | WOOD | GWB | GWB | GWB | GWB | GWB | |
| 111 | BATH | TILE | WOOD | GWB | GWB | GWB | GWB | GWB | |
| 112 | GUEST BEDROOM | WOOD | WOOD | GWB | GWB | GWB | GWB | GWB | |
| 113 | 3 CAR GARAGE | | | GWB | GWB | GWB | GWB | GWB | 5/8" TYPE "X" GWB |
| 114 | SITTING ROOM | WOOD | WOOD | GWB | GWB | GWB | GWB | GWB | |
| 115 | BAKERS KITCHEN | WOOD | WOOD | GWB | GWB | GWB | GWB | GWB | |
| 201 | STAIR | WOOD | WOOD | GWB | GWB | GWB | GWB | GWB | |
| 202 | BEDROOM 4 | WOOD | WOOD | GWB | GWB | GWB | GWB | GWB | |
| 203 | CLOSET 4 | WOOD | WOOD | GWB | GWB | GWB | GWB | GWB | |
| 204 | BATH 4 | TILE | WOOD | GWB | GWB | GWB | GWB | GWB | |
| 205 | PRIMARY CLOSET | WOOD | WOOD | GWB | GWB | GWB | GWB | GWB | |
| 206 | PRIMARY BEDROOM | WOOD | WOOD | GWB | GWB | GWB | GWB | GWB | |
| 207 | PRIMARY BATH | TILE | WOOD | GWB | GWB | GWB | GWB | GWB | |
| 208 | BEDROOM 2 | WOOD | WOOD | GWB | GWB | GWB | GWB | GWB | |
| 209 | CLOSET 2 | WOOD | WOOD | GWB | GWB | GWB | GWB | GWB | |
| 210 | BATH 2 | TILE | WOOD | GWB | GWB | GWB | GWB | GWB | |
| 211 | BATH 3 | TILE | WOOD | GWB | GWB | GWB | GWB | GWB | |
| 212 | CLOSET 3 | WOOD | WOOD | GWB | GWB | GWB | GWB | GWB | |
| 213 | LAUNDRY | TILE | WOOD | GWB | GWB | GWB | GWB | GWB | |
| 214 | BEDROOM 3 | WOOD | WOOD | GWB | GWB | GWB | GWB | GWB | |

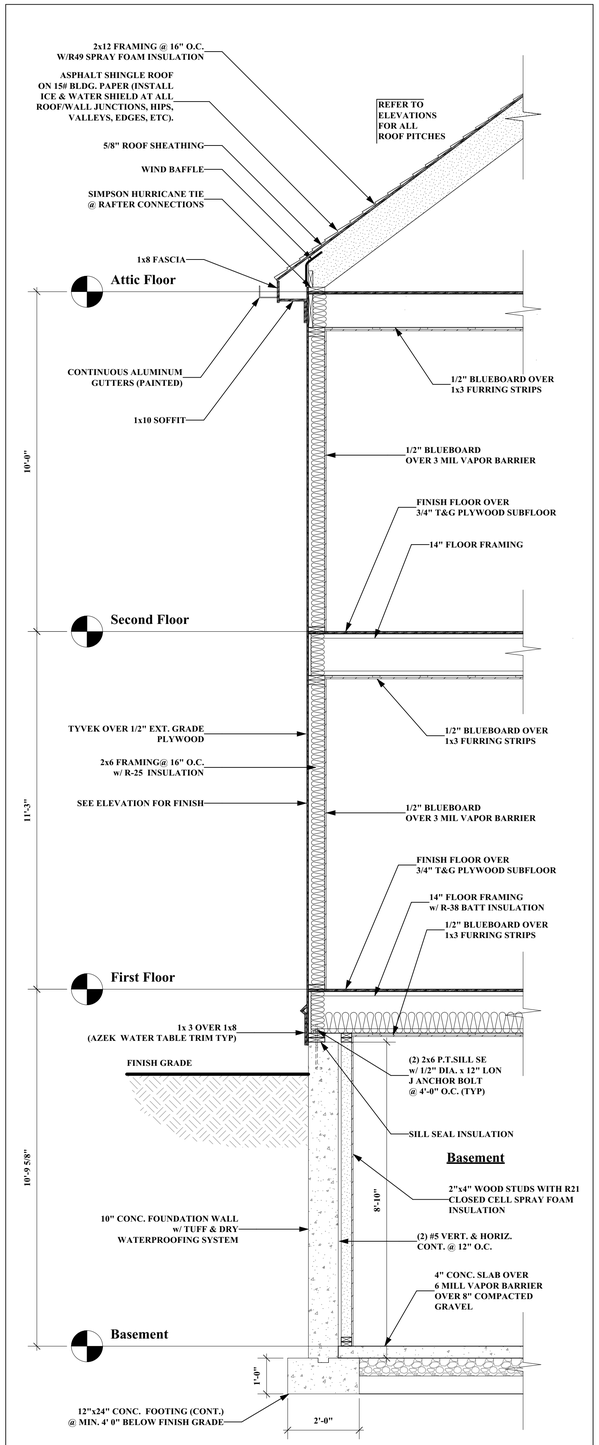


1 / A-3.2 Typical Section
1/2" = 1'-0"

**New Residence**

**320 Grove Street**
**Needham, MA**

OWNER


mckay architects

35 Bryant Street
Dedham, MA 02026

p: 781.326.5400

www.mckayarchitects.net

| REV # | DATE | ISSUANCE |
|---|---|---|
| 1 | 11/03/22 | First Draft |
| 2 | 11/22/22 | Second Draft |
| 3 | 11/29/22 | Third Draft |
| 4 | 02/23/23 | Fourth Draft |
| 5 | 07/21/23 | Fifth Draft |
| 6 | 08/16/23 | Sixth Draft |


**OWNERSHIP & USE OF DOCUMENTS**

These drawings and specifications are the property and copyright of McKay Architects and shall not be used in whole or in part, or shall be assigned to a third party without the express written permission of McKay Architects.
Contractor to verify all information and dimensions in the field prior to start of construction and is to notify McKay Architects of any discrepancies


**Schedules and Typical Section**

| | |
|---|---|
| JOB NO | |
| DATE | 02/23/23 |
| DWG BY | |
| CKD BY | MLM |
| SCALE | AS NOTED |

**A-3.1**

**General Notes Design Loads**
Massachusetts state building code code regulation 780 CMR 51.00 9th edition

1. Floor live loads: residential: 40 PSF
2. Ground snow load (PG): 40 PSF
3. Wind load basic wind speed (exposure C)- 127 MPH
4.Temporary shores shall be designed, erected, supported, braced, and maintained by the contractor to support safely all dead loads presently carried by the structural work being shored, and any construction live loads.
5. All dimensions, elevations, shelves, beam pockets, cut-outs, underground utilities, piers, footings, slabs, and all other items shall be fully coordinated with civil, geotechnical, mechanical, architectural and all other trades' drawings prior to construction

## Foundation Plan:
Scale:1/4" = 1'-0"

**Foundation Plan Notes:**
1. T.O. First floor sub floor shall be called elevation 0'-0"
2. All dimensions, elevations, shelves, beam pockets, cut-outs, underground utilities, piers, footings, slabs, and all other items shall be fully coordinated with civil, geotechnical, mechanical, architectural and all other trades' drawings prior to construction.
3. See general notes for additional foundation information & specifications.

**Foundation Notes:**
1. All topsoil, subsoil, and oil containing organic or unsuitable bearing material shall be cleared from the building footprint.
2. All soil supported footings shall be founded upon compacted natural subgrade or compacted bank run gravel fill with a bearing capacity of at least 3000 PSF. Soil bearing capacity shall be verified by a professional engineer registered in the project state.
3. G.C. shall be responsible for determining the site's suitability to support the building. Furthermore, the G.C. shall be responsible for constructing the building and surrounding site/subgrade in strict accordance with this requirement.
4. All footings shall extend at least 48" below finished grade. G.C. shall coordinate all proposed grades prior to construction.
5. Bedrock/ Ledge shall be excavated a minimum of 4" below bottom of footing elevation and covered with a layer of compacted gravel.
6. Soil shall be compacted to not less than 95% of maximum dry density per ASTM D1557 in lifts not to exceed 6" loose depth.
7. Backfill symmetrically against all foundation walls in increments not to exceed 2 feet maximum differential.
8. See plumbing and electrical drawings for under floor systems and special granular fill material requirements.
9. No footings or slabs shall be poured into or against subgrade containing free water or ice.
10. All slabs-on-grade shall be placed on a layer of compacted fine granular fill under a 10 MIL. Poly vapor retarder. Coordinate additional subgrade preparation requirements with civil and/or geotechnical engineers of record.
11. All slabs-on-grade shall be placed on a vapor barrier on a 6" compacted gravel base.
12. Forces due to hydrostatic pressure have not been considered in the design of the foundation for this structure. It is the responsibility of the General Contractor/owner to confirm with a geotechnical engineer, civil engineer, or other qualified design professional to ensure hydrostatic forces do not exist.
13. General Contractor shall coordinate all insulation, drainage, damp-proofing and water-proofing details with Architect of record.
14. A modified proctor test shall be performed by a soils testing lab on each type of soil to be compacted.
15. Field density tests shall be performed by an independent soils testing lab to verify compaction. A copy of all test reports shall be filed with the Architect of record.

**Concrete Notes:**
1. All footing and wall concrete shall have a compressive strength of not less than 4000 PSI at 28 days (entrained air content between 4.5% and 7%)
2. All interior slab concrete shall have a compressive strength of not less than 3000 PSI at 28 days and contain no air entrainment.
3. All exterior slab concrete shall have a compressive strength of not less than 4000 PSI at 28 days (entrained air content between 4.5% and 7%).
4. All concrete shall contain an approved water-reducing admixture.
5. No calcium chloride shall be used in any concrete.
6. All reinforcing bars shall be ASTM A-615 grade 60 unless noted otherwise.
7. All reinforcing bar splices shall conform to requirements of ACI 318, but in no case shall they be less than 2'-0" or 48xDIA.
8. All welded wire fabric shall conform to ASTM A-185, Fy=60 KSI
9. All welded wire fabric shall be lapped two (2) full mesh panels at sides and ends and be securely wired together.
10. See architectural drawings for type and location of all floor finishes, floor depressions and cut outs.
11. Coordinate all foundation penetrations with Architect, plumbing, mechanical, electrical contractors and local agencies.
12. All concrete shall be detailed, formed, handled, placed, and protected in accordance with procedures and guidelines prescribed in the latest edition of "building code requirements for reinforced concrete" ACI-318, manual of standard practice for reinforced concrete structures, ACI-201, and ACI-305/306 guides for hot/cold weather concreting.
13. General Contractor shall carefully coordinate all form-work, rebar placement, concrete mix design, and concrete placement to ensure accurate and complete concrete distribution throughout. All precautions, shall be taken to avoid "honeycombing" and voids in concrete foundation. Techniques, such as pre-staging concrete vibrators in congested areas, modified concrete mix designs to promote complete distribution, etc. shall be employed at the contractor's discretion.
14. Concrete voids and excessive "honey-combing" shall be documented and reported to the Architect of record for analysis and preparation of a repair method. Parging, Dry-packing, and "floating" the adjacent slab to fill voids are un-acceptable methods of repair for filling significant voids.
15. G.C. shall coordinate all concrete finishes with Architect of record. All concrete that shall be considered architecturally exposed shall be poured and finished in a manner which will produce the desired architectural finish. G.C. shall coordinate the concrete mix design (I.E. self-consolidating concrete), rebar placement, and methods of vibration to produce a fully consolidated concrete pour fee of voids and/or "honey-combing".
16. Checked shop drawings (5 sets) showing reinforcing details, including steel sizes, spacing and placement, shall be submitted by the contractor for approval prior to fabrication. The General Contractor must review the shop drawings prior to submission to the Architect of record. All copies of the shop drawing submittals shall bear a dated and signed shop drawing stamp which documents the General Contractor's approval.
17. A mix design (5 copies) shall be submitted for approval for each type of concrete. Mix design submittal shall include historical break data for each mix of concrete.
18. A set of four (4) concrete tests cylinders shall be taken by an independent concrete testing lab on each day when concrete placement exceeds 5 cubic yards. One cylinder shall be broken at 7 days, two at 28 days, and one at 56 days. A copy of all test reports shall be filed with the Architect of record.

## First Floor Framing:
Scale:1/4" = 1'-0"

**Plan Notes:**
1. #J-#K Jack and King studs shall be same dimensional stud lumber as adjacent studs. (i.e. 2J-2K means 2 full-height king studs with 2 jack studs supporting the header)
2. 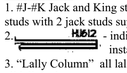

- indicates Simpson Strong-Tie type hanger required at beam connection. All Simpson hangers shall be installed per manufacturer's specifications with the maximum fastener size and quantity.
3. "Lally Column" all lally columns shall be filled solid with concrete. Provide 1/2" thick "Springfield" cap and base plates at all lally columns.
4. Unless otherwise notes on plans, all headers over door and window openings shall be supported on ea. end by a single jack stud ganged to a double king stud.
5. Beams and columns on plan marked "P.T." denote pressure treated or wolmanized lumber.
6. Refer to general notes for further requirements.
7. All full-height columns which pass through floor or ceiling framing systems shall be fully blocked and tied into that framing to effectively brace the column in both directions.
8. All platform framed posts, walls, and/or beam loads shall be transferred to supports below with cripple studs, "squash blocks", and/or full-depth solid blocking.
9. All multi-ply wood and/or engineered members shall be ganged together in accordance with manufacturer's requirements and prevailing state building code.
10. Refer to general notes and prevailing state building code for connections not specifically specified on plans.
11. Member layout depicted on this plan is intended as a general guide to framing. The exact framing layout, material take-off, and framing method shall be closely coordinated wit the architectural and structural drawings and ultimately determined by the General Contractor. Any substantial change in framing method/layout shall be reported to Architect of record.
12. All dimensions, elevations, shelves, beam pockets, cut-outs, underground utilities, piers, footings, slabs, and all other items shall be fully coordinated with civil, geotechnical, mechanical, architectural, and all other trades' drawings prior to construction.
13. All trim, soffits, rakes, eaves, brackets, gutters, corbels, build-outs, pad-outs, and all other applied architectural features and embellishments be the responsibility of others and fully coordinated with the Architect of record.

**General Notes Pre-Engineered Wood Trusses:**
1. Wood trusses shall be designed per the "design specification for metal plate connected wood trusses," published by the truss plate institute.
2. All roof trusses and overhanging wood members shall be held down with uplift anchors per truss manufacturer's requirements.
3. Wood truss fabricator shall submit to the Architect for approval prior to fabrication, shop drawings bearing seal and signature of the design professional engineer, registered in the state of Massachusetts. Shop drawings shall be reviewed and approved by the General Contractor prior to submitting to Architect. Shop drawings shall include but are not limited to: truss layout plan; truss detail sheets showing configuration, dimensions, loads, member sizes, and grades, member forces, connection plate sizes, permanent bracing requirements, uplift anchorage hardware (specified by truss designer), etc.
4. Truss designer shall include all loads required by the Massachusetts state building code and all further requirements included in the structural and architectural contract documents. Additional requirements may include, but are not limited to additional design loads due to wind and/or earthquake, snow drifting, point loads and/or additional loading from other framing members, special top chord slope requirements for drainage etc. truss designer shall carefully coordinate all loads due to mechanical equipment and plumbing fixtures with the G.C., Architect, and mechanical design.
5. Truss designer shall design, manufacture, and furnish all floor trusses which meet a live load deflection criteria of L/600 and all roof trusses which meet a total load deflection criteria of the lesser of ¾" or L/360 unless specifically approved otherwise.
6. Wood truss erector shall be responsible for design and installation of all temporary erection bracing.
7. Truss spacing shown in structural engineering plans are for reference only. General Contractor shall refer to approved truss shop drawings for actual truss layout and spacing (for both bidding and construction purposes).
8. Truss layout and design shall be coordinated with the mechanical equipment layout.

**Structural Lumber, Engineered Lumber:**
1. All material and workmanship shall be in accordance with the latest edition of "timber construction standards" of the American Institute of Timber Construction and the "National Design Specification for Stress-Grade Lumber and its Fastenings" of the National Forest Products Association.
2. The minimum grades and design values required for conventional, structural lumber shall be:
3. Studs: construction grade spruce-pine-fir, FC= 1000 PSI, E=1,300,000 PSI
4. Joists/Rafters/Beams: spruce-pine-fir No.2, FB=875 PSI, E=1,400,000 PSI
5. Pressure treated lumber: Southern Pine No.1, E=1,400,000 PSI
6. All exterior wall studs shall be at least 2x6 @ 16" O.C. unless noted otherwise. Furthermore, all wall studs adjacent to steel columns shall be fastened to face of column with Hilti X-U powder driven fasteners @ 16" O.C.
7. All multiple member beams and headers shall be supported on not less than an equal number of studs at each end, unless noted otherwise.
8. Wood columns made with three or more wood studs shall be nailed together with 16d nails. Nail spacing shall be in 2 rows, spaced 8" O.C. from both sides staggered 4" apart.
9. Unless otherwise noted, all exterior openings shall have not less than one jack stud and two full height studs at each side of the opening. All interior bearing wall openings shall have not less than two jack studs and one full height stud at each side of the opening unless noted otherwise.
10. All conventional lumber roof rafters shall have a Simpson Uplift Anchor at each bearing location. Use Simpson LSSU Skewed and/ or Sloped Hangers at each rafter as required. Provide and install 1.25"x20 GA ridge straps (10) 8d nails) at all conventional rafter pairs (or approved substitution).
11. Flush framing shall be supported by joist hangers designed for the full capacity of the supported member.
12. Provide and install double floor joists or properly designed trusses under all partitions running parallel to span.
13. All wood in contact with concrete or masonry shall be pressure treated with preservative.
14. Exterior wall sheathing shall be minimum 15/32 APA structural I rated sheathing or exterior grade. Sheathing shall be nailed with 8d nails not less than 6" O.C. on all panel edges. All wall horizontal panel edges within 48" of building corners must be blocked and nailed. Sheathing panels shall be installed to span across floor levels (centered on band joist) to achieve continuous uplift load path from roof to foundation.
15. Sub-flooring shall be ¾" tongue & groove APA Structural I Rated Sheathing exposure I unless noted otherwise. Fasten sub-floor to supporting framing with industry standard sub-floor adhesive and 8d nails @ 6" O.C.
16. Roof sheathing on flat roofs shall be minimum ¾" T&G APA Structural I Rated Sheathing.
17. Roof sheathing on non-curved sloping framing shall be minimum 5/8" T&G APA structural I rated sheathing.
18. Roof sheathing on flat roofs and non-curved sloping framing shall be nailed with 8d nails not more than 6" O.C. on all supported panel edges. Nails shall be spaced 4" O.C. in areas within 48" of ridges, hips, rakes, and eaves.
19. Roof sheathing on curved framing members shall be three layers on ¼" APA Rated Plywood sheathing with end and side joists staggered between successive layers. Each layer of sheathing shall be fastened to the supporting framing with 8d rink-shank nails @ 12" O.C. all nails shall be staggered between nails from successive layers.
20. Solid blocking shall be provided at ridges and eaves to support and fasten panel edges in all circumstances for all roof types where standard framing does not provide substrate for continuous panel edge support and fastening.
21. Engineered lumber supplier shall submit to the engineer of record for approval, shop drawings for all engineered lumber and I-Joists. Shop drawings shall include but are not limited to: Framing layout plan, member sizes, nailing patterns for multiple members, bearing lengths, connection hangers, blocking bridging, and squash blocks.
22. Laminated Veneer Lumber (LVL), Laminated Strand Lumber (LSL) and Parallel Strand Lumber (PSL) shall be versa-lam by boise cascade or equal.
23. LVL and PSL beams shall have the following minimum properties: FB=3100 PSI, FT= 2150 PSI, FC=750 PSI, FC= 3000 PSI, FV= 285 PSI, E=2,000,000 PSI
24. PSL columns/posts shall have the following minimum properties: FB=2650 PSI, FT=1650 PSI, FC=750 PSI, FC= 3000 PSI, FV=285 PSI, E=1,700,000 PSI
25. LVL's and PSL's shall be free of finger joints, scarf joints or mechanical connections for the full length of the member.
26. Adhesive used shall be waterproof, meeting the requirements of ASTM D-2559-76.
27. All Simpson Connectors (hangers, straps, uplift connectors, post caps, etc.) shall be coated with z-max corrosion resistance or approved substitute.
28. All fasteners in contact with pressure-treated lumber shall be certified for use with the preservative treatment used.
29. All fasteners exposed to moisture, expected condensation, pressure treated lumber, and/or the weather shall be made from non-corrosive materials or coated with an approved anti-corrosive coating certified and approved for use with the materials to be fastened.
30. All porch roof and floor beams shall be fastened to resist uplift loads with Simpson 20GA coil straps. Straps shall be centered over the top of the beam and bent down along both sides of post. Fasten straps with IOD nails through all available nail holes.
31. All ceiling framing (including truss bottom chords) adjacent to exterior walls shall be framed in order to brace the exterior walls against lateral movements. Coordinate all ceiling framing with Architect of record.
32. At all over framed roof conditions framed with conventional lumber, provide & install continuous 2x8 cleat fastened through sheathing and into each roof rafter with (2) #10 decking screws. Fasten over-framed rafters to cleat with (4) 16d toe-nails and single #10 decking screw through top of rafter.

## Second Floor & Low Roof Framing
Scale:1/4" = 1'-0"

**Plan Notes:**
1. #J-#K jack and king studs shall be same dimensional stud lumber as adjacent studs. (i.e. 2J-2K means 2 full-height king studs with 2 jack studs supporting the header).

2. 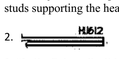

- indicates Simpson Strong-Tie type hanger required at beam connection. All Simpson hangers shall be installed per manufacturer's specifications with the maximum fastener size and quantity.
3. "Lally Column" all lally columns shall filled solid with concrete. Provide ½" thick "Springfield" cap and base plates at all lally columns.
4. Unless otherwise noted on plans, all headers over door and window openings shall be supported on ea. end by a single jack stud ganged to a double king stud.
5. Beams and columns on plan marked "P.T." denote pressure treated or wolmanized lumber.
6. Refer to general notes for further requirements.
7. All full-height columns which pass through floor or ceiling framing systems shall be fully blocked and tied into that framing to effectively brace the column in both directions.
8. All platform framed posts, walls, and/or beam loads shall be transferred to supports below with cripple studs, "squash blocks" and/or full-depth solid blocking.
9. All multi-ply wood and/or engineered members shall be ganged together in accordance with manufacturer's requirements and prevailing State Building Code.
10. Refer to general notes and prevailing State Building Code for connections not specifically specified on plans.
11. Member layout depicted on this plan is intended as a general guide to framing. The exact framing layout, material take-off, and framing method shall be closely coordinated with the architectural and structural drawings and ultimately determined by the General Contractor. Any substantial change in framing method/layout shall be reported to Architect of record.
12. All dimensions, elevations, shelves, beam pockets, cut-outs, underground utilities, piers, footings, slabs, and all other items shall be fully coordinated with civil, geotechnical, mechanical, architectural and all other trades' drawings prior to construction.
13. All trim, soffits, rakes, eaves, brackets, gutters, corbels, build-outs, pad-outs, and all other applied architectural features and embellishments be the responsibility of others and fully coordinated with the Architect of record.

**Structural Steel Notes:**
1. All detailing, fabrication and erection shall conform to the AISC specifications and codes, latest edition.
2. All wide flange section structural beams (W) shall be ASTM A992 Fy=50 KSI. Base plates, channels, angles, and misc. structural steel shall be ASTM A-36, Fy= 36 KSI. All square and rectangular hollow structural sections (HSS) shall be ASTM A-500 grade B FY minimum 46 KSI.
3. All anchor bolts and threaded rods shall conform to the requirements of ASTM F1554 and A307.
4. All bolts, nuts, and washers shall conform to the requirements of ASTM A-325 for ¾" diameter high strength bolts unless noted otherwise.
5. All welding electrodes shall be E7OXX.
6. All welding shall be done by certified welders and shall conform to the AWS "code for ARC and gas welding in building construction", latest edition.
7. No connection shall consist of less than two ¾" diameter bolts or welds developing a minimum of 10,000 pounds unless noted otherwise.
8. All fillet welds shall be a minimum of ¼" unless noted otherwise.
9. All welds shall be visually inspected and all full penetration welds shall be inspected by ultra-sonic testing.
10. An independent steel testing agency shall perform all inspection and testing. The structural steel fabricator and erector shall schedule all work to allow the above testing requirements to be completed. A copy of all test reports shall be filed with the Architect.
11. The contractor shall be responsible for the control of all erection procedures and sequences with relation to temperature differentials and stability.
12. After fabrication, all steel, except that to be galvanized shall be cleaned of all rust, loose mill scale and other foreign materials and receive one coat of approved primer paint or approved prefatory application specified by the corrosion inhibiting coating manufacturer.
13. The fabricator shall furnish checked shop and erection drawings and obtain approval prior to fabricating and structural steel.
14. Cuts, holes, openings, etc. required in structural steel members for the work of other trades shall be shown on shop drawings for structural steel and shall be made in the shop. Burning of holes or cuts in structural steel members in the field will not be permitted except by written permission from the structural engineer of record.
15. Full moment connections shall be designed and detailed to develop the full capacity of the members being connected.
16. Submit shop drawings for review and approval prior to construction.

## Upper Roof Framing
Scale: ¼" = 1'- 0"

**Plan Notes:**
1. #J-#K jack and king studs shall be same dimensional stud lumber as adjacent studs. (e.e.2J-2K means 2 full height king studs with 2 jack studs supporting the header).

2. 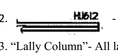

- indicates Simpson Strong-Tie type hanger required at beam connection. All Simpson hangers shall be installed per manufacturer's specifications with the maximum fastener size and quantity.
3. "Lally Column"- All lally columns shall be filled solid with concrete. Provide ½" thick "Springfield" cap and base plates at all lally columns.
4. Unless otherwise noted on plans, all headers over door and window openings shall be supported on ea. end by a single jack stud ganged to a double king stud.
5. Beams and columns on plan marked "P.T." denote pressure treated or wolmanized lumber.
6. Refer to general notes for further requirements.
7. All full-height columns which pass through floor or ceiling framing systems shall be fully blocked and tied into that framing to effectively brace the column in both directions.
8. All platform framed posts, walls, and/or beam loads shall be transferred to supports below with cripple studs, "squash blocks", and/or full-depth solid blocking.
9. All multi-ply wood and/or engineered members shall be ganged together in accordance with manufacturer's requirements and prevailing State Building Code.
10. Refer to general notes and prevailing State Building Code for connections not specifically specified on plans.
11. Member layout depicted on this plan is intended as a general guide to framing. The exact framing layout, material take-off, and framing method shall be closely coordinated with the architectural and structural drawings and ultimately determined by the General Contractor. Any substantial change in framing method/layout shall be reported to Architect of record.
12. All dimensions, elevations, shelves, beam pockets, cut-outs, underground utilities, piers, footings, slabs, and all other items shall be fully coordinated with civil, geotechnical, mechanical, architectural and all other trades' drawings prior to construction.
13. All trim, soffits, rakes, eaves, brackets, gutters, corbels, build-outs, pad -outs, and all other applied architectural features and embellishments be the responsibility of others and fully coordinated with the Architect of record.

## First Floor Shear Walls
Scale: ¼" = 1'-0"

**Holdown Notes:**
1. All threaded rod holdowns shall be fastened to concrete foundations with Hilti Hit Hy 200 EPOXY system installed in strict accordance with manufacturer's requirements.
2. All multi-ply wall studs fastened to holdowns shall be ganged together in accordance with building code and general notes.
3. Where upper wall is not in line with lower wall, "STI" strap holdowns shall be extended through floor sheathing and fastened to beams/blocking below. Strap may be extended down and bent around underside of framing as required. See typical shearwall details for further information.
4. All dimensions, elevations, shelves, beam pockets cut-outs, underground utilities, piers, footings, slabs, and all other items shall be fully coordinated with civil, geotechnical, mechanical, architectural and all other trades' drawings prior to construction.

## Second Floor Shear Walls
Scale: ¼" = 1'-0"

**Holdown Notes:**
1. All threaded rod holdowns shall be fastened to concrete foundations with Hilti Hit Hy 200 EPOXY system installed in strict accordance with manufacturer's requirements.
2. All multi-ply wall studs fastened to holdowns shall be ganged together in accordance with building code and general notes.
3. Where upper wall is not in line with lower wall, "STI" strap holdowns shall be extended through floor sheathing and fastened to beams/blocking below. Strap may be extended down and bent around underside of framing as required. See typical shearwall details for further information.
4. All dimensions, elevations, shelves, beam pockets cut-outs, underground utilities, piers, footings, slabs, and all other items shall be fully coordinated with civil, geotechnical, mechanical, architectural and all other trades' drawings prior to construction.

**New Residence**

**320 Grove Street**
**Needham, MA**

OWNER


mckay architects

35 Bryant Street
Dedham, MA 02026

p: 781.326.5400

www.mckayarchitects.net

| REV # | DATE | ISSUANCE |
|---|---|---|
| 1 | 11/03/22 | First Draft |
| 2 | 11/22/22 | Second Draft |
| 3 | 11/29/22 | Third Draft |
| 4 | 02/23/23 | Fourth Draft |
| 5 | 07/21/23 | Fifth Draft |
| 6 | 08/16/23 | Sixth Draft |


**OWNERSHIP & USE OF DOCUMENTS**

These drawings and specifications are the property and copyright of McKay Architects and shall not be used in whole or in part, or shall be assigned to a third party without the express written permission of McKay Architects.
Contractor to verify all information and dimensions in the field prior to start of construction and is to notify McKay Architects of any discrepancies


**Structural Notes**

| | |
|---|---|
| JOB NO | |
| DATE | 02/23/23 |
| DWG BY | |
| CKD BY | MLM |
| SCALE | AS NOTED |

**S-0.1**

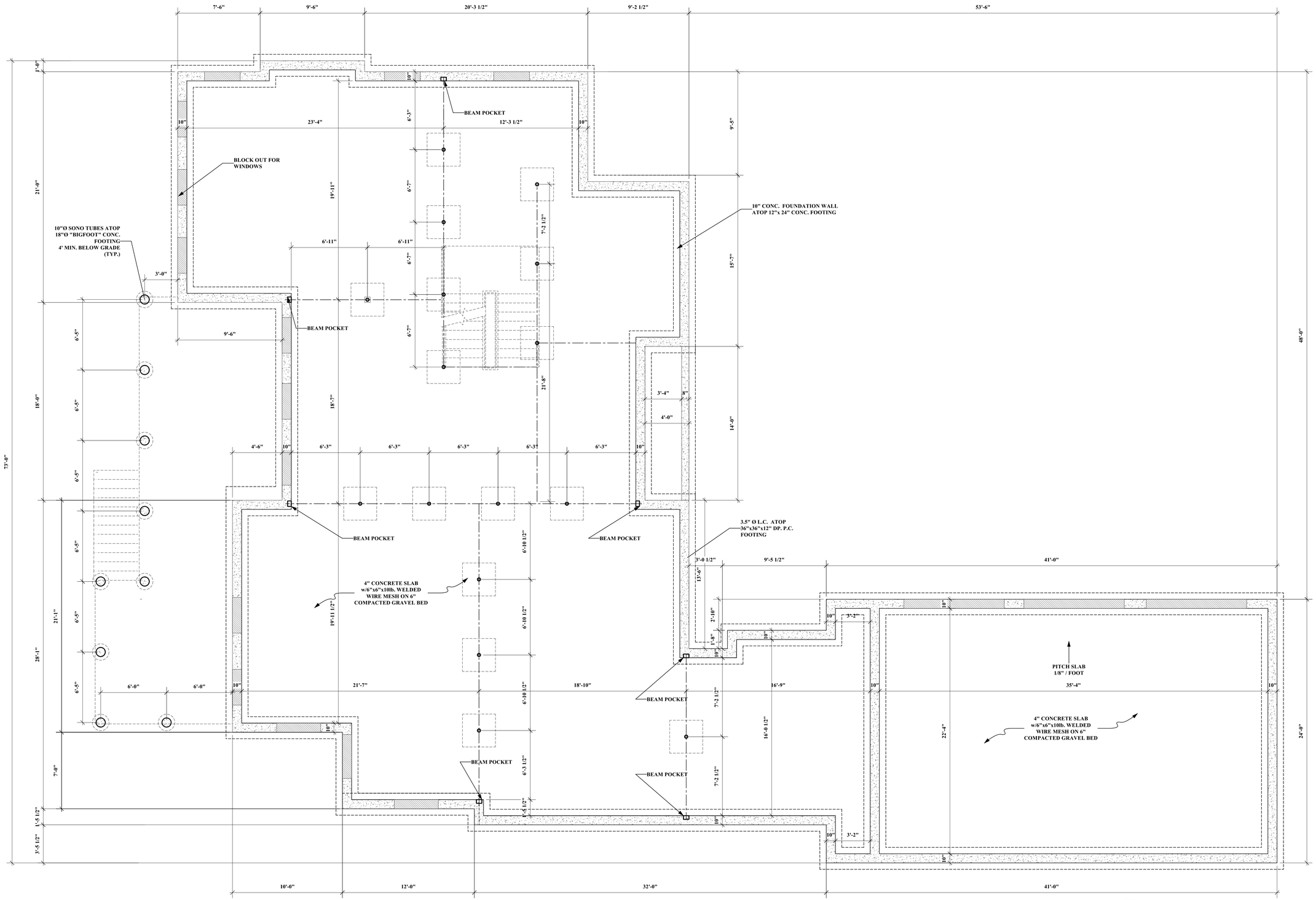


1 / S-1.1 Foundation Plan
1/4" = 1'-0"

# New Residence

## 320 Grove Street
Needham, MA

OWNER


mckay architects

35 Bryant Street
Dedham, MA 02026

p: 781.326.5400

www.mckayarchitects.net


REGISTERED ARCHITECT MICHAEL L. McKAY NO. AR 8947 COMMONWEALTH OF MASSACHUSETTS

| REV # | DATE | ISSUANCE |
|---|---|---|
| 1 | 11/03/22 | First Draft |
| 2 | 11/22/22 | Second Draft |
| 3 | 11/29/22 | Third Draft |
| 4 | 02/23/23 | Fourth Draft |
| 5 | 07/21/23 | Fifth Draft |
| 6 | 08/16/23 | Sixth Draft |


**OWNERSHIP & USE OF DOCUMENTS**

These drawings and specifications are the property and copyright of McKay Architects and shall not be used in whole or in part, or shall be assigned to a third party without the express written permission of McKay Architects.

Contractor to verify all information and dimensions in the field prior to start of construction and is to notify McKay Architects of any discrepancies


# Foundation Plan

| | |
|---|---|
| JOB NO | |
| DATE | 02/23/23 |
| DWG BY | |
| CKD BY | MLM |
| SCALE | AS NOTED |

S-1.1

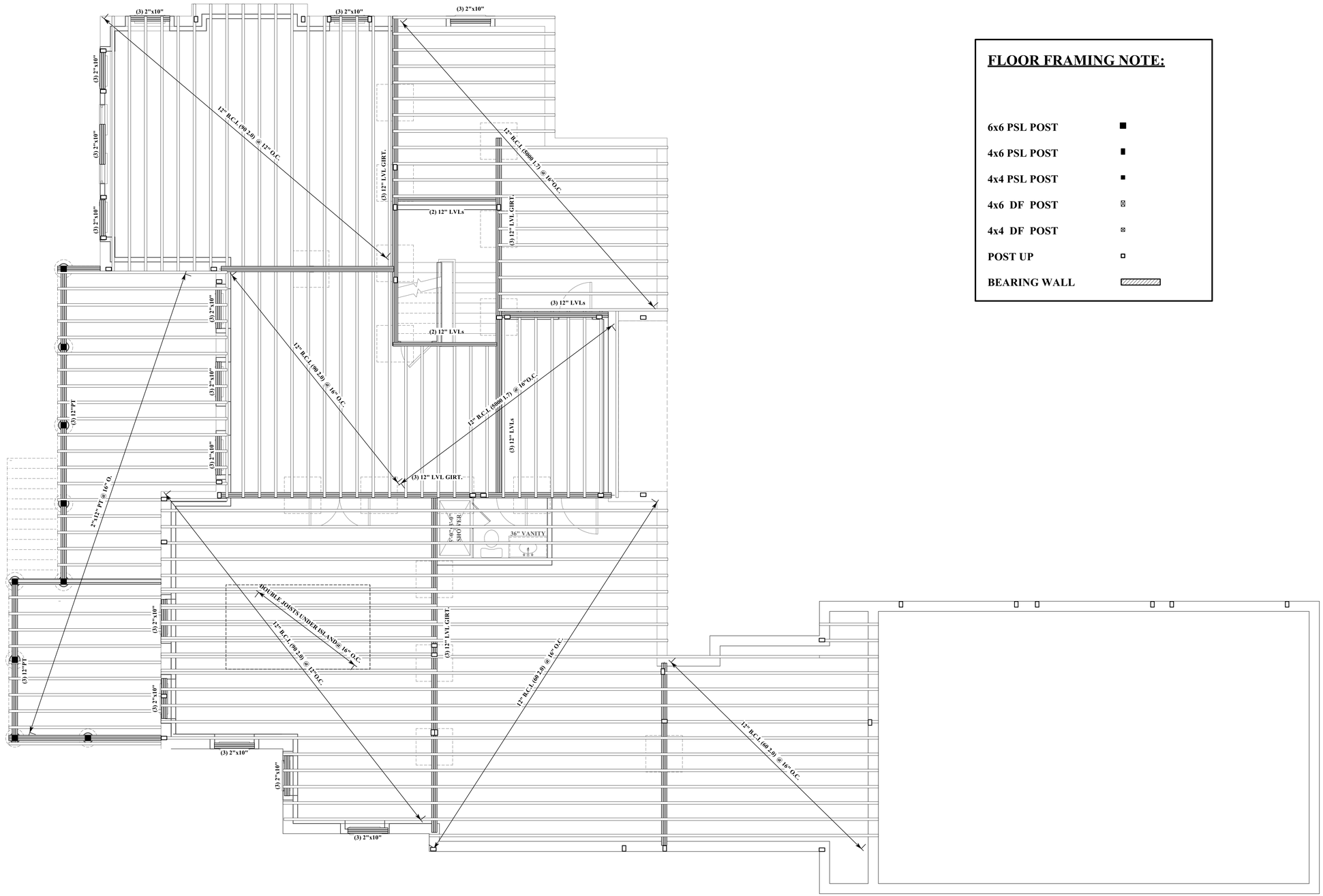


## FLOOR FRAMING NOTE:

| | |
|---|---|
| 6x6 PSL POST | ■ |
| 4x6 PSL POST | ▮ |
| 4x4 PSL POST | ▪ |
| 4x6 DF POST | ⊠ |
| 4x4 DF POST | ⊠ |
| POST UP | ▫ |
| BEARING WALL | ▨ |

1 / S-1.2 First Floor Framing Plan
1/4" = 1'-0"

**New Residence**

**320 Grove Street**
**Needham, MA**

OWNER


mckay architects

35 Bryant Street
Dedham, MA 02026

p: 781.326.5400

www.mckayarchitects.net


REGISTERED ARCHITECT
MICHAEL L. McKAY
NO. AR 8947
COMMONWEALTH OF MASSACHUSETTS

| REV # | DATE | ISSUANCE |
|---|---|---|
| 1 | 11/03/22 | First Draft |
| 2 | 11/22/22 | Second Draft |
| 3 | 11/29/22 | Third Draft |
| 4 | 02/23/23 | Fourth Draft |
| 5 | 07/21/23 | Fifth Draft |
| 6 | 08/16/23 | Sixth Draft |


**OWNERSHIP & USE OF DOCUMENTS**

These drawings and specifications are the property and copyright of McKay Architects and shall not be used in whole or in part, or shall be assigned to a third party without the express written permission of McKay Architects.

Contractor to verify all information and dimensions in the field prior to start of construction and is to notify McKay Architects of any discrepancies


# First Floor Framing Plan

| | |
|---|---|
| JOB NO | |
| DATE | 02/23/23 |
| DWG BY | |
| CKD BY | MLM |
| SCALE | AS NOTED |

**S-1.2**

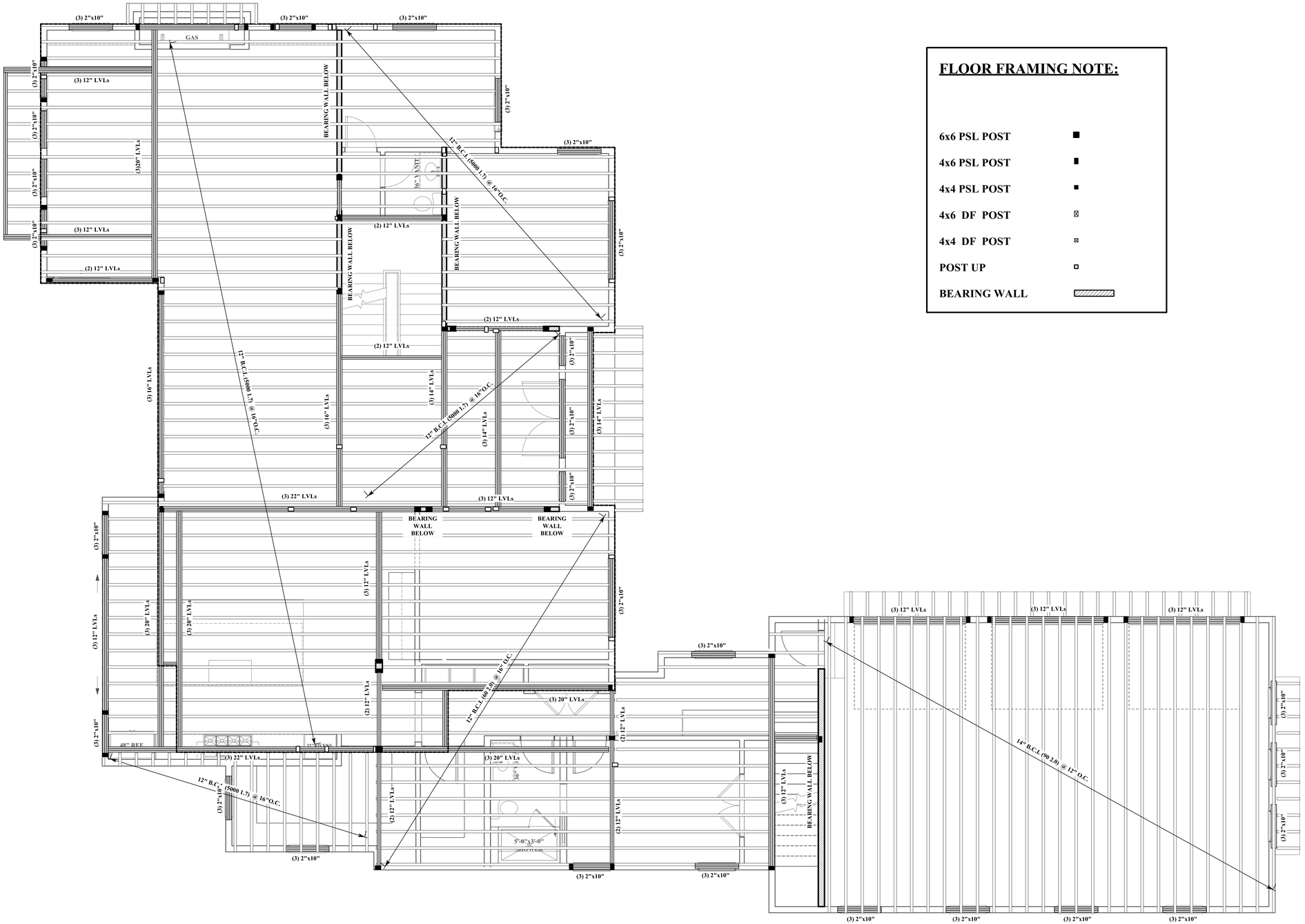


## FLOOR FRAMING NOTE:

| | |
|---|---|
| 6x6 PSL POST | ■ |
| 4x6 PSL POST | ▮ |
| 4x4 PSL POST | ▪ |
| 4x6 DF POST | ⊠ |
| 4x4 DF POST | ⊠ |
| POST UP | ▫ |
| BEARING WALL | ▨ |

1 / S-1.3 Second Floor Framing Plan
1/4" = 1'-0"

**New Residence**

**320 Grove Street**
**Needham, MA**

OWNER


mckay architects

35 Bryant Street
Dedham, MA 02026

p: 781.326.5400

www.mckayarchitects.net


REGISTERED ARCHITECT MICHAEL L. McKAY NO. AR 6947 COMMONWEALTH OF MASSACHUSETTS

| REV # | DATE | ISSUANCE |
|---|---|---|
| 1 | 11/03/22 | First Draft |
| 2 | 11/22/22 | Second Draft |
| 3 | 11/29/22 | Third Draft |
| 4 | 02/23/23 | Fourth Draft |
| 5 | 07/21/23 | Fifth Draft |
| 6 | 08/16/23 | Sixth Draft |


**OWNERSHIP & USE OF DOCUMENTS**

These drawings and specifications are the property and copyright of McKay Architects and shall not be used in whole or in part, or shall be assigned to a third party without the express written permission of McKay Architects.

Contractor to verify all information and dimensions in the field prior to start of construction and is to notify McKay Architects of any discrepancies


# Second Floor Framing Plan

| | |
|---|---|
| JOB NO | |
| DATE | 02/23/23 |
| DWG BY | |
| CKD BY | MLM |
| SCALE | AS NOTED |

**S-1.3**

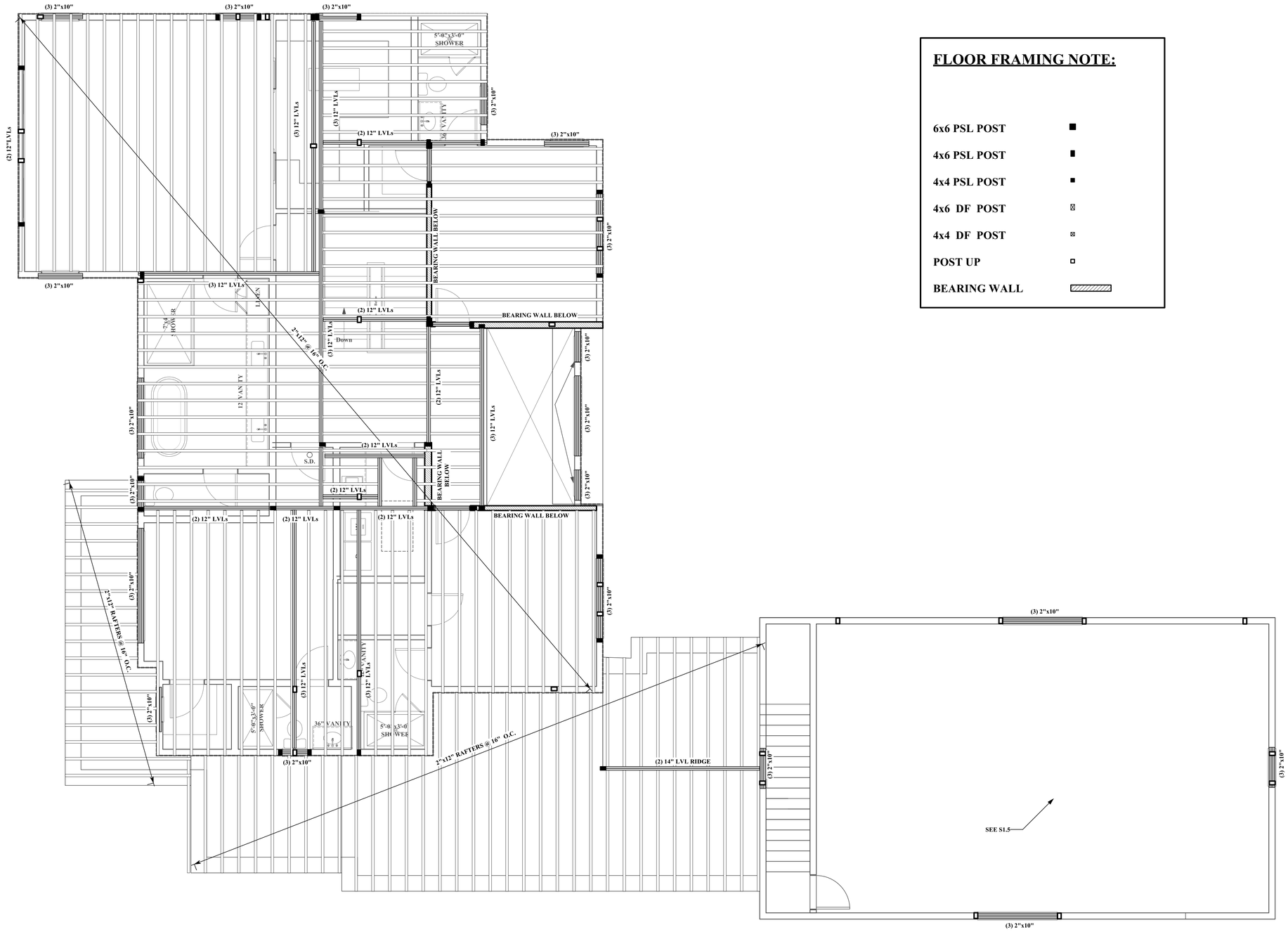


1
S-1.4
Attic Floor Framing Plan
1/4" = 1'-0"

## FLOOR FRAMING NOTE:

| | |
|---|---|
| 6x6 PSL POST | ■ |
| 4x6 PSL POST | ▮ |
| 4x4 PSL POST | ▪ |
| 4x6 DF POST | ⊠ |
| 4x4 DF POST | ⊠ |
| POST UP | ▫ |
| BEARING WALL | ▨ |

# New Residence

## 320 Grove Street
Needham, MA

OWNER


mckay architects

35 Bryant Street
Dedham, MA 02026

p: 781.326.5400

www.mckayarchitects.net


REGISTERED ARCHITECT
MICHAEL L. McKAY
NO. AR 6947
COMMONWEALTH OF MASSACHUSETTS

| REV # | DATE | ISSUANCE |
|---|---|---|
| 1 | 11/03/22 | First Draft |
| 2 | 11/22/22 | Second Draft |
| 3 | 11/29/22 | Third Draft |
| 4 | 02/23/23 | Fourth Draft |
| 5 | 07/21/23 | Fifth Draft |
| 6 | 08/16/23 | Sixth Draft |


**OWNERSHIP & USE OF DOCUMENTS**

These drawings and specifications are the property and copyright of McKay Architects and shall not be used in whole or in part, or shall be assigned to a third party without the express written permission of McKay Architects.

Contractor to verify all information and dimensions in the field prior to start of construction and is to notify McKay Architects of any discrepancies


# Attic Floor Framing Plan

| | |
|---|---|
| JOB NO | |
| DATE | 02/23/23 |
| DWG BY | |
| CKD BY | MLM |
| SCALE | AS NOTED |

S-1.4

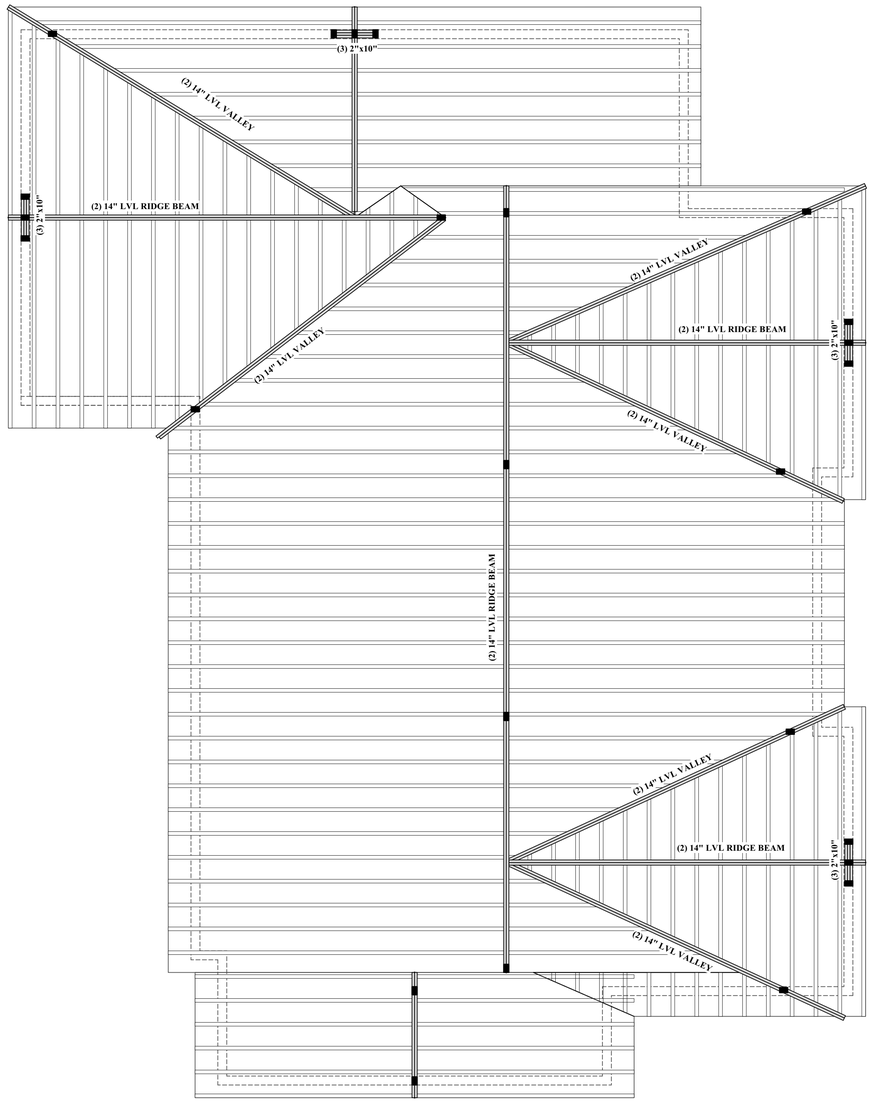


## ROOF FRAMING NOTE:

ALL RAFTERS TO BE 2x12 @ 16" O.C.
w/2x10 COLLAR TIES @ 16" O.C. (U.N.O.)

| | |
|---|---|
| 6x6 PSL POST | ■ |
| 4x6 PSL POST | ▮ |
| 4x4 PSL POST | ▪ |
| 4x6 DF POST | ⊠ |
| 4x4 DF POST | ⊠ |
| POST UP | ▫ |
| BEARING WALL | ▨ |

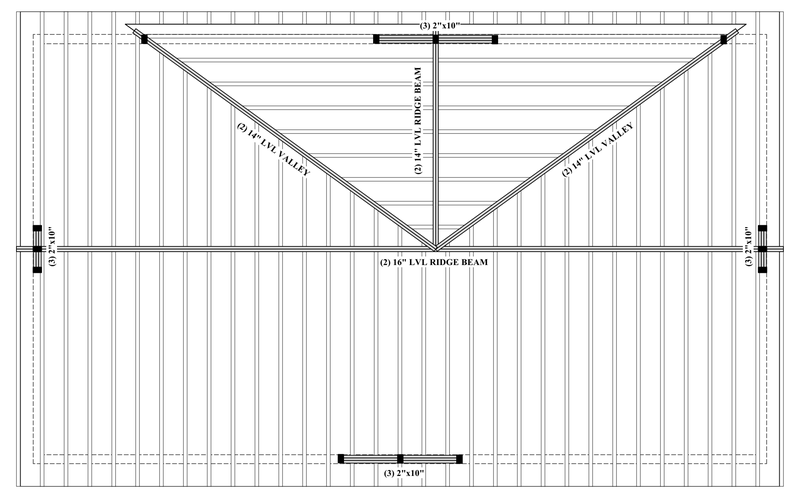


1
S-1.5
Roof Framing Plan
1/4" = 1'-0"

**New Residence**

**320 Grove Street**
**Needham, MA**

OWNER


mckay architects

35 Bryant Street
Dedham, MA 02026

p: 781.326.5400

www.mckayarchitects.net


REGISTERED ARCHITECT
MICHAEL L. McKAY
NO. AR 6947
COMMONWEALTH OF MASSACHUSETTS

| REV # | DATE | ISSUANCE |
|---|---|---|
| 1 | 11/03/22 | First Draft |
| 2 | 11/22/22 | Second Draft |
| 3 | 11/29/22 | Third Draft |
| 4 | 02/23/23 | Fourth Draft |
| 5 | 07/21/23 | Fifth Draft |
| 6 | 08/16/23 | Sixth Draft |


**OWNERSHIP & USE OF DOCUMENTS**

These drawings and specifications are the property and copyright of McKay Architects and shall not be used in whole or in part, or shall be assigned to a third party without the express written permission of McKay Architects.

Contractor to verify all information and dimensions in the field prior to start of construction and is to notify McKay Architects of any discrepancies


# Roof Framing Plan

| | |
|---|---|
| JOB NO | |
| DATE | 02/23/23 |
| DWG BY | |
| CKD BY | MLM |
| SCALE | AS NOTED |

**S-1.5**

PLANNING & COMMUNITY DEVELOPMENT
PLANNING DIVISION

December 5, 2023

Mr. Jonathan Tamkin, Chair, and Members
Zoning Board of Appeals
Public Services Administration Building
500 Dedham Avenue
Needham, MA 02492

Dear Mr. Tamkin and Members of the Zoning Board of Appeals:

At its meeting of December 5, 2023, the Planning Board reviewed the applications to be heard by the Board of Appeals on December 14, 2023, and made the following recommendations:

1. **30 Wilshire Park –**Jeremy & Jessica Karlin, owners, applied for a Special Permit under Sections 1.4.6, and any other applicable section of the By-Law to alter, enlarge and extend a pre-existing, non-conforming single-family to allow the demolition of an existing deck and stairs and replace it with a basement and a family room above. The property is located at 30 Wilshire Park, Needham, MA in the Single-Residence B (SRB) District.

   The Planning Board previously commented on this application by letter dated October 3, 2023. The comments were as follows: The subject proposal will require a variance. The property is currently conforming as to FAR at .37. In the SRB district the maximum permissible FAR is .38. The addition as proposed creates a noncompliant FAR of .42. This change is not permissible by special permit and will require a variance. Section 1.4.6 of the By Law states as follows: "*The issuance of a special permit hereunder shall not authorize the violation of any dimensional, parking or intensity regulations with which the structure or use was therefore in conformity.*" The Planning Board further notes that the ZBA should ensure that the proposal meets the Stormwater By-Law. (This was a vote of 3-0, as Planning Board Chair Adam Block recused himself).

2. **460 Hillside Avenue** - Dish Wireless, LLC, applicant, applied to the Board of Appeals for a Special Permit under Sections 6.7.3.3 (b) (c) and any other applicable section of the By-Law to install as part of their wireless telecommunications network some of the following equipment: 3 antennas, 6 remote radio units, 3 junctions boxes, 3 fiber cables, and 3 power cables. The property is located at 460 Hillside Avenue, Needham, MA in the Industrial (I) District.

   The Planning Board makes NO COMMENT.
   (This was a vote of 4-0, as Planning Board Member Jeanne S. McKnight recused herself).

3. **320 Grove Street -** Corbin Petro and Jessica Gelman, owners, applied to the Board of Appeals for a Variance under MGL 40A, Section 10, 4.2.3, and Section 7.5.3 and any other applicable section of the Needham By-Law to seek zoning relief to allow side setbacks of no less than 15 feet where 25 feet are allowed due to unusual soil, shape of topography of the land. This request is associated with the demolition and reconstruction of an existing non-conforming single family home.

   The Planning Board makes NO COMMENT.

4. **1688 Central Avenue -** Holly Clarke, Gregg Darish, Robert DiMase, Matthew and Nicole Heideman, Carl Jonasson, Ann and Peter Lyons, and Eileen Sullivan, appellants, applied to the Board of Appeals for an Appeal of Building Inspector Decision (ABID) of Building Permit BC23-10079 issued to Matt Borrelli and Needham Enterprise LLC dated September 19, 2023, for the construction of a childcare facility. The ABID concludes that the Building Permit plans on file do not demonstrate that the construction, alteration or use as proposed complies with the Zoning By-Laws as limited by the Dover Amendment MGL 40A, Section 3. The property is located at 1688 Central Street, Needham, MA in the Single-Residence A (SRA) District.

   The Planning Board previously commented on this application by letter dated November 7, 2023. The comments were as follows:
   The Planning Board makes NO COMMENT.
   (This was a vote of 3-0, as Planning Board Vice-Chair Natasha Espada and Planning Board Member Paul S. Alpert recused themselves).

NEEDHAM PLANNING BOARD

*Lee Newman*

Lee Newman

Director of Planning and Community Development

**TOWN OF NEEDHAM, MASSACHUSETTS**
**PUBLIC WORKS DEPARTMENT**
**500 Dedham Avenue, Needham, MA 02492**
**Telephone (781) 455-7550 FAX (781) 449-9023**

December 5th, 2023

Needham Zoning Board of Appeals
Needham Public Safety Administration Building
Needham, MA 02492

RE: Case Review-Variance
320 Grove Street- Variance

Dear Members of the Board,

The Department of Public Works has completed its review of the above referenced variance for the proposed 2 Story wood framed new construction home.

The documents submitted for review are as follows:

- Application for Special Permit dated 11/28/23;
- Cover letter prepared by applicant dated 11/21/23
- Certified Plot Plan by Field Resources Dated 11/10/23
- 320 Grove Street New Residence prepared by McKay Architects consisting of 19 sheets date 8/16/23

Our comments and recommendations are as follows:

- Due to the risk of flooding in the area, along with the low-lying topography of the lot, it is strongly advised to delete the finished basement portion of the project.

- There is no reference to a civil engineer on record for the proposed grading or storm water plan. Applicants must submit stamped engineered storm water plan before the building permit is issued.

- In accordance with the Town of Needham Stormwater Bylaw, the proposed plan must include stamped drainage calculations and stormwater plan with adequate infiltration system, to store/infiltrate 1" of runoff off for the proposed impervious areas. The plans should be revised prior to receiving a building permit that shows the required storm water system.

- In accordance with the Town of Needham Stormwater Bylaw, the proposed new structure requires erosion control measures. The plans should be revised prior to receiving a building permit that show erosion controls at the work zone.

If you have any questions regarding the above, please contact our office at 781-455-7538.

Truly yours,

Thomas A Ryder
Town Engineer

**TOWN OF NEEDHAM**
**CONSERVATION DEPARTMENT**
**Public Services Administration Building**
**500 Dedham Avenue**
**Needham, MA 02492**

**TEL: (781) 455-7550 x248**

TO: Zoning Board of Appeals

FROM: Debbie Anderson, PWS, Director of Conservation

DATE: December 5, 2023

SUBJECT: Variance Application
Map 220, Parcel 3
320 Grove Street

---

The Conservation Department is in receipt of the Variance application for the ("subject property") project site referenced above, as it relates to the jurisdiction of the Needham Conservation Commission (NCC). The NCC's jurisdiction is established under the Massachusetts Wetlands Protection Act ("WPA"; MGL Ch. 131 S. 40) and the Town of Needham Wetlands Protection Bylaw ("Bylaw"; Needham General Bylaws Section 6).

The Applicant previously submitted a Notice of Intent for the proposed improvements to the subject property. On July 27, 2023, the Conservation Commission issued an Order of Conditions (OOC) approving the proposed project. The OOC (attached) includes several special conditions related to the construction.

The majority of this property is located on the opposite side of the stream channel located to the rear of the existing house and due to the forested/wetland nature of that portion of the property, it would be considered wildlife habitat that connects to the adjacent Conservation Commission owned property. The Conservation Commission would not approve of the necessary crossing over the stream to access the wooded/wetland portion of the property for development. In short, any development, from a Conservation Commission point of view is required to leave the natural areas untouched.

Should you have any questions, please do not hesitate to contact me or Clayton Hutchinson in the Conservation Department.

**TOWN OF NEEDHAM**
**CONSERVATION DEPARTMENT**
**Public Services Administration Building**
**500 Dedham Avenue**
**Needham, MA 02492**

VIA CERTIFIED MAIL & EMAIL
**7016 3010 0001 0243 2141**

To: Brian Nelson, P.E.
MetroWest Engineering, Inc.
75 Franklin Street
Framingham, MA. 01702

From: Debbie Anderson, Director of Conservation DA

Re: 320 Grove Street; Order of Conditions
**DEP File #234-908**

Date: July 27, 2023

I have enclosed both an original and a copy of the Order of Conditions issued by the Needham Conservation Commission for the proposed project at 320 Grove Street. **The original must be recorded at the Norfolk County Registry of Deeds, and proof of recording must be provided to the Conservation Department prior to the start of work.**

**Please remember that at the completion of the project a Certificate of Compliance must be requested, approved by the Conservation Commission and recorded in the Registry of Deeds to remove the encumbrance placed on the property title by the Order of Conditions.**

If you have any questions, please contact our office at (781) 455-7550 x 248.

*Thank you.*

cc: Brian Nelson (bnelson@mwengineering.com)
Jessica Gelman (corbin.petro@gmail.com)
MA Department of Environmental Protection
Building (via email)
File

**Massachusetts Department of Environmental Protection**
Bureau of Resource Protection - Wetlands

# WPA Form 5 – Order of Conditions

Massachusetts Wetlands Protection Act M.G.L. c. 131, §40

Provided by MassDEP:
234-908
MassDEP File #

eDEP Transaction #

Needham
City/Town

## A. General Information

**Please note:** this form has been modified with added space to accommodate the Registry of Deeds Requirements

**Important:** When filling out forms on the computer, use only the tab key to move your cursor - do not use the return key.

1. From: Needham
Conservation Commission

2. This issuance is for (check one): a. ☒ Order of Conditions b. ☐ Amended Order of Conditions

3. To: Applicant:

Jessica/Corbin
a. First Name

Gelman/Petro
b. Last Name

c. Organization

320 Grove Street
d. Mailing Address

Needham
e. City/Town

MA
f. State

02492
g. Zip Code

4. Property Owner (if different from applicant):

a. First Name

b. Last Name

c. Organization

d. Mailing Address

e. City/Town

f. State

g. Zip Code

5. Project Location:

320 Grove Street
a. Street Address

Needham
b. City/Town

220
c. Assessors Map/Plat Number

3
d. Parcel/Lot Number

Latitude and Longitude, if known: 42.16'43" N
d. Latitude

-71.17'12" W
e. Longitude

**Massachusetts Department of Environmental Protection**
Bureau of Resource Protection - Wetlands
# WPA Form 5 – Order of Conditions
Massachusetts Wetlands Protection Act M.G.L. c. 131, §40

Provided by MassDEP:
234-908
MassDEP File #

eDEP Transaction #

Needham
City/Town

## A. General Information (cont.)

6. Property recorded at the Registry of Deeds for (attach additional information if more than one parcel):

| | |
|---|---|
| Norfolk | 186119 |
| a. County | b. Certificate Number (if registered land) |
| | |
| c. Book | d. Page |

7. Dates:

| May 25, 2023 | July 13, 2023 | July 27, 2023 |
|---|---|---|
| a. Date Notice of Intent Filed | b. Date Public Hearing Closed | c. Date of Issuance |

8. Final Approved Plans and Other Documents (attach additional plan or document references as needed):

Proposed Site Plan, 320 Grove Street in Wellesley/Needham, Mass."
a. Plan Title

| | |
|---|---|
| MetroWest Engineering, Inc. | Robert A. Gemma, P.E., P.L.S. |
| b. Prepared By | c. Signed and Stamped by |
| June 28, 2023 | 1" = 20' |
| d. Final Revision Date | e. Scale |

**See Exhibit A**
f. Additional Plan or Document Title — g. Date

## B. Findings

1. Findings pursuant to the Massachusetts Wetlands Protection Act:

Following the review of the above-referenced Notice of Intent and based on the information provided in this application and presented at the public hearing, this Commission finds that the areas in which work is proposed is significant to the following interests of the Wetlands Protection Act (the Act). Check all that apply:

a. ☒ Public Water Supply b. ☐ Land Containing Shellfish c. ☒ Prevention of Pollution

d. ☒ Private Water Supply e. ☐ Fisheries f. ☒ Protection of Wildlife Habitat

g. ☒ Groundwater Supply h. ☒ Storm Damage Prevention i. ☒ Flood Control

2. This Commission hereby finds the project, as proposed, is: (check one of the following boxes)

**Approved** subject to:

a. ☒ the following conditions which are necessary in accordance with the performance standards set forth in the wetlands regulations. This Commission orders that all work shall be performed in accordance with the Notice of Intent referenced above, the following General Conditions, and any other special conditions attached to this Order. To the extent that the following conditions modify or differ from the plans, specifications, or other proposals submitted with the Notice of Intent, these conditions shall control.

**Massachusetts Department of Environmental Protection**
Bureau of Resource Protection - Wetlands
# WPA Form 5 – Order of Conditions
Massachusetts Wetlands Protection Act M.G.L. c. 131, §40

Provided by MassDEP:
234-908
MassDEP File #

eDEP Transaction #

Needham
City/Town

## B. Findings (cont.)

**Denied** because:

b. ☐ the proposed work cannot be conditioned to meet the performance standards set forth in the wetland regulations. Therefore, work on this project may not go forward unless and until a new Notice of Intent is submitted which provides measures which are adequate to protect the interests of the Act, and a final Order of Conditions is issued. **A description of the performance standards which the proposed work cannot meet is attached to this Order.**

c. ☐ the information submitted by the applicant is not sufficient to describe the site, the work, or the effect of the work on the interests identified in the Wetlands Protection Act. Therefore, work on this project may not go forward unless and until a revised Notice of Intent is submitted which provides sufficient information and includes measures which are adequate to protect the Act's interests, and a final Order of Conditions is issued. **A description of the specific information which is lacking and why it is necessary is attached to this Order as per 310 CMR 10.05(6)(c).**

3. ☐ Buffer Zone Impacts: Shortest distance between limit of project disturbance and the wetland resource area specified in 310 CMR 10.02(1)(a) — 1-foot (a. linear feet)

**Inland Resource Area Impacts:** Check all that apply below. (For Approvals Only)

| Resource Area | Proposed Alteration | Permitted Alteration | Proposed Replacement | Permitted Replacement |
|---|---|---|---|---|
| 4. ☐ Bank | a. linear feet | b. linear feet | c. linear feet | d. linear feet |
| 5. ☐ Bordering Vegetated Wetland | a. square feet | b. square feet | c. square feet | d. square feet |
| 6. ☐ Land Under Waterbodies and Waterways | a. square feet | b. square feet | c. square feet | d. square feet |
| | e. c/y dredged | f. c/y dredged | | |
| 7. ☐ Bordering Land Subject to Flooding | a. square feet | b. square feet | c. square feet | d. square feet |
| Cubic Feet Flood Storage | e. cubic feet | f. cubic feet | g. cubic feet | h. cubic feet |
| 8. ☐ Isolated Land Subject to Flooding | a. square feet | b. square feet | | |
| Cubic Feet Flood Storage | c. cubic feet | d. cubic feet | e. cubic feet | f. cubic feet |
| 9. ☐ Riverfront Area | a. total sq. feet | b. total sq. feet | | |
| Sq ft within 100 ft | c. square feet | d. square feet | e. square feet | f. square feet |
| Sq ft between 100-200 ft | g. square feet | h. square feet | i. square feet | j. square feet |

**Massachusetts Department of Environmental Protection**
Bureau of Resource Protection - Wetlands
# WPA Form 5 – Order of Conditions
Massachusetts Wetlands Protection Act M.G.L. c. 131, §40

Provided by MassDEP:
234-908
MassDEP File #

eDEP Transaction #

Needham
City/Town

## B. Findings (cont.)

**Coastal Resource Area Impacts:** Check all that apply below. (For Approvals Only)

| | Proposed Alteration | Permitted Alteration | Proposed Replacement | Permitted Replacement |
|---|---|---|---|---|
| 10. ☐ Designated Port Areas | Indicate size under Land Under the Ocean, below | | | |
| 11. ☐ Land Under the Ocean | a. square feet | b. square feet | | |
| | c. c/y dredged | d. c/y dredged | | |
| 12. ☐ Barrier Beaches | Indicate size under Coastal Beaches and/or Coastal Dunes below | | | |
| 13. ☐ Coastal Beaches | a. square feet | b. square feet | cu yd c. nourishment | cu yd d. nourishment |
| 14. ☐ Coastal Dunes | a. square feet | b. square feet | cu yd c. nourishment | cu yd d. nourishment |
| 15. ☐ Coastal Banks | a. linear feet | b. linear feet | | |
| 16. ☐ Rocky Intertidal Shores | a. square feet | b. square feet | | |
| 17. ☐ Salt Marshes | a. square feet | b. square feet | c. square feet | d. square feet |
| 18. ☐ Land Under Salt Ponds | a. square feet | b. square feet | | |
| | c. c/y dredged | d. c/y dredged | | |
| 19. ☐ Land Containing Shellfish | a. square feet | b. square feet | c. square feet | d. square feet |
| 20. ☐ Fish Runs | Indicate size under Coastal Banks, Inland Bank, Land Under the Ocean, and/or inland Land Under Waterbodies and Waterways, above | | | |
| | a. c/y dredged | b. c/y dredged | | |
| 21. ☐ Land Subject to Coastal Storm Flowage | a. square feet | b. square feet | | |
| 22. ☐ Riverfront Area | a. total sq. feet | b. total sq. feet | | |
| Sq ft within 100 ft | c. square feet | d. square feet | e. square feet | f. square feet |
| Sq ft between 100-200 ft | g. square feet | h. square feet | i. square feet | j. square feet |

**Massachusetts Department of Environmental Protection**
Bureau of Resource Protection - Wetlands
# WPA Form 5 – Order of Conditions
Massachusetts Wetlands Protection Act M.G.L. c. 131, §40

Provided by MassDEP:
234-908
MassDEP File #

eDEP Transaction #
Needham
City/Town

## B. Findings (cont.)

* **#23.** If the project is for the purpose of restoring or enhancing a wetland resource area in addition to the square footage that has been entered in Section B.5.c (BVW) or B.17.c (Salt Marsh) above, please enter the additional amount here.

23. ☐ Restoration/Enhancement *:

a. square feet of BVW | b. square feet of salt marsh

24. ☐ Stream Crossing(s):

a. number of new stream crossings | b. number of replacement stream crossings

## C. General Conditions Under Massachusetts Wetlands Protection Act

**The following conditions are only applicable to Approved projects.**

1. Failure to comply with all conditions stated herein, and with all related statutes and other regulatory measures, shall be deemed cause to revoke or modify this Order.
2. The Order does not grant any property rights or any exclusive privileges; it does not authorize any injury to private property or invasion of private rights.
3. This Order does not relieve the permittee or any other person of the necessity of complying with all other applicable federal, state, or local statutes, ordinances, bylaws, or regulations.
4. The work authorized hereunder shall be completed within three years from the date of this Order unless either of the following apply:
   a. The work is a maintenance dredging project as provided for in the Act; or
   b. The time for completion has been extended to a specified date more than three years, but less than five years, from the date of issuance. If this Order is intended to be valid for more than three years, the extension date and the special circumstances warranting the extended time period are set forth as a special condition in this Order.
   c. If the work is for a Test Project, this Order of Conditions shall be valid for no more than one year.
5. This Order may be extended by the issuing authority for one or more periods of up to three years each upon application to the issuing authority at least 30 days prior to the expiration date of the Order. An Order of Conditions for a Test Project may be extended for one additional year only upon written application by the applicant, subject to the provisions of 310 CMR 10.05(11)(f).
6. If this Order constitutes an Amended Order of Conditions, this Amended Order of Conditions does not extend the issuance date of the original Final Order of Conditions and the Order will expire on _____ unless extended in writing by the Department.
7. Any fill used in connection with this project shall be clean fill. Any fill shall contain no trash, refuse, rubbish, or debris, including but not limited to lumber, bricks, plaster, wire, lath, paper, cardboard, pipe, tires, ashes, refrigerators, motor vehicles, or parts of any of the foregoing.

**Massachusetts Department of Environmental Protection**
Bureau of Resource Protection - Wetlands
# WPA Form 5 – Order of Conditions
Massachusetts Wetlands Protection Act M.G.L. c. 131, §40

Provided by MassDEP:
234-908
MassDEP File #

eDEP Transaction #

Needham
City/Town

## C. General Conditions Under Massachusetts Wetlands Protection Act

8. This Order is not final until all administrative appeal periods from this Order have elapsed, or if such an appeal has been taken, until all proceedings before the Department have been completed.

9. No work shall be undertaken until the Order has become final and then has been recorded in the Registry of Deeds or the Land Court for the district in which the land is located, within the chain of title of the affected property. In the case of recorded land, the Final Order shall also be noted in the Registry's Grantor Index under the name of the owner of the land upon which the proposed work is to be done. In the case of the registered land, the Final Order shall also be noted on the Land Court Certificate of Title of the owner of the land upon which the proposed work is done. The recording information shall be submitted to the Conservation Commission on the form at the end of this Order, which form must be stamped by the Registry of Deeds, prior to the commencement of work.

10. A sign shall be displayed at the site not less then two square feet or more than three square feet in size bearing the words,

    "Massachusetts Department of Environmental Protection" [or, "MassDEP"]

    "File Number 234-908 "

11. Where the Department of Environmental Protection is requested to issue a Superseding Order, the Conservation Commission shall be a party to all agency proceedings and hearings before MassDEP.

12. Upon completion of the work described herein, the applicant shall submit a Request for Certificate of Compliance (WPA Form 8A) to the Conservation Commission.

13. The work shall conform to the plans and special conditions referenced in this order.

14. Any change to the plans identified in Condition #13 above shall require the applicant to inquire of the Conservation Commission in writing whether the change is significant enough to require the filing of a new Notice of Intent.

15. The Agent or members of the Conservation Commission and the Department of Environmental Protection shall have the right to enter and inspect the area subject to this Order at reasonable hours to evaluate compliance with the conditions stated in this Order, and may require the submittal of any data deemed necessary by the Conservation Commission or Department for that evaluation.

16. This Order of Conditions shall apply to any successor in interest or successor in control of the property subject to this Order and to any contractor or other person performing work conditioned by this Order.

**Massachusetts Department of Environmental Protection**
Bureau of Resource Protection - Wetlands
# WPA Form 5 – Order of Conditions
Massachusetts Wetlands Protection Act M.G.L. c. 131, §40

Provided by MassDEP:
234-908
MassDEP File #

eDEP Transaction #

Needham
City/Town

## C. General Conditions Under Massachusetts Wetlands Protection Act (cont.)

17. Prior to the start of work, and if the project involves work adjacent to a Bordering Vegetated Wetland, the boundary of the wetland in the vicinity of the proposed work area shall be marked by wooden stakes or flagging. Once in place, the wetland boundary markers shall be maintained until a Certificate of Compliance has been issued by the Conservation Commission.

18. All sedimentation barriers shall be maintained in good repair until all disturbed areas have been fully stabilized with vegetation or other means. At no time shall sediments be deposited in a wetland or water body. During construction, the applicant or his/her designee shall inspect the erosion controls on a daily basis and shall remove accumulated sediments as needed. The applicant shall immediately control any erosion problems that occur at the site and shall also immediately notify the Conservation Commission, which reserves the right to require additional erosion and/or damage prevention controls it may deem necessary. Sedimentation barriers shall serve as the limit of work unless another limit of work line has been approved by this Order.

19. The work associated with this Order (the "Project")
    (1) ☐ is subject to the Massachusetts Stormwater Standards
    (2) ☒ is NOT subject to the Massachusetts Stormwater Standards

    **If the work is subject to the Stormwater Standards, then the project is subject to the following conditions:**

    a) All work, including site preparation, land disturbance, construction and redevelopment, shall be implemented in accordance with the construction period pollution prevention and erosion and sedimentation control plan and, if applicable, the Stormwater Pollution Prevention Plan required by the National Pollution Discharge Elimination System Construction General Permit as required by Stormwater Condition 8. Construction period erosion, sedimentation and pollution control measures and best management practices (BMPs) shall remain in place until the site is fully stabilized.

    b) No stormwater runoff may be discharged to the post-construction stormwater BMPs unless and until a Registered Professional Engineer provides a Certification that:
    *i.* all construction period BMPs have been removed or will be removed by a date certain specified in the Certification. For any construction period BMPs intended to be converted to post construction operation for stormwater attenuation, recharge, and/or treatment, the conversion is allowed by the MassDEP Stormwater Handbook BMP specifications and that the BMP has been properly cleaned or prepared for post construction operation, including removal of all construction period sediment trapped in inlet and outlet control structures;
    *ii.* as-built final construction BMP plans are included, signed and stamped by a Registered Professional Engineer, certifying the site is fully stabilized;
    *iii.* any illicit discharges to the stormwater management system have been removed, as per the requirements of Stormwater Standard 10;

**Massachusetts Department of Environmental Protection**
Bureau of Resource Protection - Wetlands
**WPA Form 5 – Order of Conditions**
Massachusetts Wetlands Protection Act M.G.L. c. 131, §40

Provided by MassDEP:
234-908
MassDEP File #

eDEP Transaction #

Needham
City/Town

## C. General Conditions Under Massachusetts Wetlands Protection Act (cont.)

*iv.* all post-construction stormwater BMPs are installed in accordance with the plans (including all planting plans) approved by the issuing authority, and have been inspected to ensure that they are not damaged and that they are in proper working condition;

*v.* any vegetation associated with post-construction BMPs is suitably established to withstand erosion.

c) The landowner is responsible for BMP maintenance until the issuing authority is notified that another party has legally assumed responsibility for BMP maintenance. Prior to requesting a Certificate of Compliance, or Partial Certificate of Compliance, the responsible party (defined in General Condition 18(e)) shall execute and submit to the issuing authority an Operation and Maintenance Compliance Statement ("O&M Statement) for the Stormwater BMPs identifying the party responsible for implementing the stormwater BMP Operation and Maintenance Plan ("O&M Plan") and certifying the following:

i.) the O&M Plan is complete and will be implemented upon receipt of the Certificate of Compliance, and

ii.) the future responsible parties shall be notified in writing of their ongoing legal responsibility to operate and maintain the stormwater management BMPs and implement the Stormwater Pollution Prevention Plan.

d) Post-construction pollution prevention and source control shall be implemented in accordance with the long-term pollution prevention plan section of the approved Stormwater Report and, if applicable, the Stormwater Pollution Prevention Plan required by the National Pollution Discharge Elimination System Multi-Sector General Permit.

e) Unless and until another party accepts responsibility, the landowner, or owner of any drainage easement, assumes responsibility for maintaining each BMP. To overcome this presumption, the landowner of the property must submit to the issuing authority a legally binding agreement of record, acceptable to the issuing authority, evidencing that another entity has accepted responsibility for maintaining the BMP, and that the proposed responsible party shall be treated as a permittee for purposes of implementing the requirements of Conditions 18(f) through 18(k) with respect to that BMP. Any failure of the proposed responsible party to implement the requirements of Conditions 18(f) through 18(k) with respect to that BMP shall be a violation of the Order of Conditions or Certificate of Compliance. In the case of stormwater BMPs that are serving more than one lot, the legally binding agreement shall also identify the lots that will be serviced by the stormwater BMPs. A plan and easement deed that grants the responsible party access to perform the required operation and maintenance must be submitted along with the legally binding agreement.

f) The responsible party shall operate and maintain all stormwater BMPs in accordance with the design plans, the O&M Plan, and the requirements of the Massachusetts Stormwater Handbook.

**Massachusetts Department of Environmental Protection**
Bureau of Resource Protection - Wetlands
# WPA Form 5 – Order of Conditions
Massachusetts Wetlands Protection Act M.G.L. c. 131, §40

Provided by MassDEP:
234-908
MassDEP File #

eDEP Transaction #

Needham
City/Town

## C. General Conditions Under Massachusetts Wetlands Protection Act (cont.)

g) The responsible party shall:
1. Maintain an operation and maintenance log for the last three (3) consecutive calendar years of inspections, repairs, maintenance and/or replacement of the stormwater management system or any part thereof, and disposal (for disposal the log shall indicate the type of material and the disposal location);
2. Make the maintenance log available to MassDEP and the Conservation Commission ("Commission") upon request; and
3. Allow members and agents of the MassDEP and the Commission to enter and inspect the site to evaluate and ensure that the responsible party is in compliance with the requirements for each BMP established in the O&M Plan approved by the issuing authority.

h) All sediment or other contaminants removed from stormwater BMPs shall be disposed of in accordance with all applicable federal, state, and local laws and regulations.
i) Illicit discharges to the stormwater management system as defined in 310 CMR 10.04 are prohibited.
j) The stormwater management system approved in the Order of Conditions shall not be changed without the prior written approval of the issuing authority.
k) Areas designated as qualifying pervious areas for the purpose of the Low Impact Site Design Credit (as defined in the MassDEP Stormwater Handbook, Volume 3, Chapter 1, Low Impact Development Site Design Credits) shall not be altered without the prior written approval of the issuing authority.

l) Access for maintenance, repair, and/or replacement of BMPs shall not be withheld. Any fencing constructed around stormwater BMPs shall include access gates and shall be at least six inches above grade to allow for wildlife passage.

Special Conditions (if you need more space for additional conditions, please attach a text document):

**See Exhibit A for Findings and Conditions adopted under the MA Wetlands Protection Act (M.G.L. Ch. 131 S. 40) and the Needham General Wetlands Protection Bylaw (Article 6).**

20. For Test Projects subject to 310 CMR 10.05(11), the applicant shall also implement the monitoring plan and the restoration plan submitted with the Notice of Intent. If the conservation commission or Department determines that the Test Project threatens the public health, safety or the environment, the applicant shall implement the removal plan submitted with the Notice of Intent or modify the project as directed by the conservation commission or the Department.

**Massachusetts Department of Environmental Protection**
Bureau of Resource Protection - Wetlands
# WPA Form 5 – Order of Conditions
Massachusetts Wetlands Protection Act M.G.L. c. 131, §40

Provided by MassDEP:
234-908
MassDEP File #

eDEP Transaction #

Needham
City/Town

## D. Findings Under Municipal Wetlands Bylaw or Ordinance

1. Is a municipal wetlands bylaw or ordinance applicable? ☒ Yes ☐ No
2. The Needham (Conservation Commission) hereby finds (check one that applies):
   a. ☐ that the proposed work cannot be conditioned to meet the standards set forth in a municipal ordinance or bylaw, specifically:

      1. Municipal Ordinance or Bylaw _____ 2. Citation _____

      Therefore, work on this project may not go forward unless and until a revised Notice of Intent is submitted which provides measures which are adequate to meet these standards, and a final Order of Conditions is issued.

   b. ☒ that the following additional conditions are necessary to comply with a municipal ordinance or bylaw:

      1. Municipal Ordinance or Bylaw: Needham Wetlands Protection Bylaw
      2. Citation: Article 6
3. The Commission orders that all work shall be performed in accordance with the following conditions and with the Notice of Intent referenced above. To the extent that the following conditions modify or differ from the plans, specifications, or other proposals submitted with the Notice of Intent, the conditions shall control.
   The special conditions relating to municipal ordinance or bylaw are as follows (if you need more space for additional conditions, attach a text document):

   **See Exhibit A for Findings and Conditions adopted under the MA Wetlands Protection Act (M.G.L. Ch. 131 S. 40) and the Needham General Wetlands Protection Bylaw (Article 6).**

**Massachusetts Department of Environmental Protection**
Bureau of Resource Protection - Wetlands
# WPA Form 5 – Order of Conditions
Massachusetts Wetlands Protection Act M.G.L. c. 131, §40

Provided by MassDEP:
234-908
MassDEP File #

eDEP Transaction #

Needham
City/Town

## E. Signatures

This Order is valid for three years, unless otherwise specified as a special condition pursuant to General Conditions #4, from the date of issuance.

7/27/23
1. Date of Issuance

Please indicate the number of members who will sign this form.
This Order must be signed by a majority of the Conservation Commission.

6
2. Number of Signers

The Order must be mailed by certified mail (return receipt requested) or hand delivered to the applicant. A copy also must be mailed or hand delivered at the same time to the appropriate Department of Environmental Protection Regional Office, if not filing electronically, and the property owner, if different from applicant.

| Signature | Printed Name |
|---|---|
| | David Herer |
| | Sue Barber |
| | Fred ~~Modor~~ Moder |
| | Reade Everett |
| | Peter Oehlkers |
| | Alison Richardson |
| | Polina Safran |
| | |

☐ by hand delivery on

Date

☒ by certified mail, return receipt requested, on 7/27/23

Date

**Massachusetts Department of Environmental Protection**
Bureau of Resource Protection - Wetlands
**WPA Form 5 – Order of Conditions**
Massachusetts Wetlands Protection Act M.G.L. c. 131, §40

Provided by MassDEP:
234-908
MassDEP File #

eDEP Transaction #

Needham
City/Town

## F. Appeals

The applicant, the owner, any person aggrieved by this Order, any owner of land abutting the land subject to this Order, or any ten residents of the city or town in which such land is located, are hereby notified of their right to request the appropriate MassDEP Regional Office to issue a Superseding Order of Conditions. The request must be made by certified mail or hand delivery to the Department, with the appropriate filing fee and a completed Request for Departmental Action Fee Transmittal Form, as provided in 310 CMR 10.03(7) within ten business days from the date of issuance of this Order. A copy of the request shall at the same time be sent by certified mail or hand delivery to the Conservation Commission and to the applicant, if he/she is not the appellant.

Any appellants seeking to appeal the Department's Superseding Order associated with this appeal will be required to demonstrate prior participation in the review of this project. Previous participation in the permit proceeding means the submission of written information to the Conservation Commission prior to the close of the public hearing, requesting a Superseding Order, or providing written information to the Department prior to issuance of a Superseding Order.

The request shall state clearly and concisely the objections to the Order which is being appealed and how the Order does not contribute to the protection of the interests identified in the Massachusetts Wetlands Protection Act (M.G.L. c. 131, § 40), and is inconsistent with the wetlands regulations (310 CMR 10.00). To the extent that the Order is based on a municipal ordinance or bylaw, and not on the Massachusetts Wetlands Protection Act or regulations, the Department has no appellate jurisdiction.

**Massachusetts Department of Environmental Protection**
Bureau of Resource Protection - Wetlands
# WPA Form 5 – Order of Conditions
Massachusetts Wetlands Protection Act M.G.L. c. 131, §40

Provided by MassDEP:
234-908
MassDEP File #

eDEP Transaction #

Needham
City/Town

## G. Recording Information

Prior to commencement of work, this Order of Conditions must be recorded in the Registry of Deeds or the Land Court for the district in which the land is located, within the chain of title of the affected property. In the case of recorded land, the Final Order shall also be noted in the Registry's Grantor Index under the name of the owner of the land subject to the Order. In the case of registered land, this Order shall also be noted on the Land Court Certificate of Title of the owner of the land subject to the Order of Conditions. The recording information on this page shall be submitted to the Conservation Commission listed below.

Needham
Conservation Commission

Detach on dotted line, have stamped by the Registry of Deeds and submit to the Conservation Commission.

To:

Needham
Conservation Commission

Please be advised that the Order of Conditions for the Project at:

320 Grove Street
Project Location

234-908
MassDEP File Number

Has been recorded at the Registry of Deeds of:

Norfolk
County

Book

Page

for:
Property Owner

and has been noted in the chain of title of the affected property in:

Book

Page

In accordance with the Order of Conditions issued on:

Date

If recorded land, the instrument number identifying this transaction is:

Instrument Number

If registered land, the document number identifying this transaction is:

Document Number

Signature of Applicant

**Massachusetts Department of Environmental Protection**
Bureau of Resource Protection - Wetlands

# Request for Departmental Action Fee Transmittal Form

Massachusetts Wetlands Protection Act M.G.L. c. 131, §40

DEP File Number:

Provided by DEP

## A. Request Information

1. Location of Project

a. Street Address | b. City/Town, Zip

c. Check number | d. Fee amount

**Important:** When filling out forms on the computer, use only the tab key to move your cursor - do not use the return key.

2. Person or party making request (if appropriate, name the citizen group's representative):

Name

Mailing Address

City/Town | State | Zip Code

Phone Number | Fax Number (if applicable)

3. Applicant (as shown on Determination of Applicability (Form 2), Order of Resource Area Delineation (Form 4B), Order of Conditions (Form 5), Restoration Order of Conditions (Form 5A), or Notice of Non-Significance (Form 6)):

Name

Mailing Address

City/Town | State | Zip Code

Phone Number | Fax Number (if applicable)

4. DEP File Number:

## B. Instructions

1. When the Departmental action request is for (check one):

- ☐ Superseding Order of Conditions – Fee: $120.00 (single family house projects) or $245 (all other projects)
- ☐ Superseding Determination of Applicability – Fee: $120
- ☐ Superseding Order of Resource Area Delineation – Fee: $120

**Massachusetts Department of Environmental Protection**
Bureau of Resource Protection - Wetlands

# Request for Departmental Action Fee Transmittal Form

Massachusetts Wetlands Protection Act M.G.L. c. 131, §40

DEP File Number:

Provided by DEP

## B. Instructions (cont.)

Send this form and check or money order, payable to the *Commonwealth of Massachusetts,* to:

Department of Environmental Protection
Box 4062
Boston, MA 02211

2. On a separate sheet attached to this form, state clearly and concisely the objections to the Determination or Order which is being appealed. To the extent that the Determination or Order is based on a municipal bylaw, and not on the Massachusetts Wetlands Protection Act or regulations, the Department has no appellate jurisdiction.

3. Send a **copy** of this form and a **copy** of the check or money order with the Request for a Superseding Determination or Order by certified mail or hand delivery to the appropriate DEP Regional Office (see https://www.mass.gov/service-details/massdep-regional-offices-by-community).

4. A copy of the request shall at the same time be sent by certified mail or hand delivery to the Conservation Commission and to the applicant, if he/she is not the appellant.

**ORDER OF CONDITIONS**
**DEP FILE NO. 234-908**
**EXHIBIT A**

**Project**: The project will consist of the demolition of the existing single-family house and construction of a new single-family house with attached garages, driveway, hardscape and landscape areas, stormwater management system, supporting utilities and mitigation planting area. The work is located within the 100-foot Buffer Zone to Bordering Vegetated Wetlands and the Bank of an intermittent stream. Portions of a proposed porous pavement patio, deck and mitigation plantings will be located within the 25-foot Buffer Zone.

**Applicant**: Jessica Gelman & Corbin Petro
320 Grove Street
Needham, MA 02492

**Owner**: Same

**Location**: 320 Grove Street (Assessors Map 220 Lot 3)

**Documents of Record**:

- WPA Form 3 – Notice of Intent and supporting documents received May 25, 2023.
- Needham Wetlands Protection Bylaw Application for a Permit received May 25, 2023.
- Plan entitled: "Existing Conditions Plan, 310/320 Grove Street in Wellesley/Needham, Mass.", prepared by MetroWest Engineering, Inc., signed and stamped by Robert A. Gemma, P.E., P.L.S., dated 5/19/2023, final revision date 6/28/2023.
- Plan entitled: "Proposed Layout Plan, 320 Grove Street in Wellesley/Needham, Mass.", prepared by MetroWest Engineering, Inc.., signed and stamped by Robert A. Gemma, P.E., P.L.S., dated 5/19/2023, final revision date 6/28/2023.
- Plan entitled: "Proposed Site Plan, 320 Grove Street in Wellesley/Needham, Mass.", prepared by MetroWest Engineering, Inc.., signed and stamped by Robert A. Gemma, P.E., P.L.S., dated 5/19/2023, final revision date 6/28/2023.
- Plan entitled: "Details Plan, 320 Grove Street in Wellesley/Needham, Mass.", prepared by MetroWest Engineering, Inc.., signed and stamped by Robert A. Gemma, P.E., P.L.S., dated 5/19/2023, final revision date 6/28/2023.
- Document titled: "Request for Waiver of Local Bylaw Fee, 320 Grove Street, Needham", prepared by Brian Nelson, P.E., Metro West Engineering, Inc., dated July 3, 2023
- Document titled "Hydrologic Analysis, Proposed Site Development, 320 Grove Street, Needham/Wellesley, MA", prepared by MetroWest Engineering, Inc., dated May 2023.

## FINDINGS OF FACT:

The Applicant's are proposing to tear down an existing 2,102 square foot single family house on a 4.7 acre property located in both Needham and Wellesley. Approximately 8,070 square feet of the property is located in Wellesley. The house is located in Needham but is accessed by a driveway located in Wellesley. The existing house has been plagued by water flooding into the basement due to drainage issues created by the undersized drainage pipe that receives the flow from the intermittent stream. The flooding has created a health hazard due to growth of mold.

The construction of the new house will reduce the amount of impervious area within the 25-foot Buffer Zone by 1,501 square feet and within the 50-foot Buffer Zone by 512 square feet. The total increase in impervious area within the 100-foot Buffer Zone is 1,148 square feet. The Applicant will be removing two (2) trees for the project and is proposing installation of two (2) red maple (*Acer rubrum*) trees and sixteen (16) native shrubs to meet the Conservation Commission *Guidelines for Reviewing Tree Removal Projects*.

The project includes installation of a subsurface stormwater management infiltration system. An Operations and Maintenance (O&M) plan will be implemented to maintain the intended post-construction functions and operations of the infiltration chambers, to be signed by the property owners upon or before a Certificate of Compliance is requested.

Proposed work within the 25-foot Buffer Zone includes installation of a portion of a porous paver patio and a deck within the footprint of the existing deck and patio. Details of the proposed porous paver patio and the construction of the deck are included on the approved "Details" plan. These uses within the 25-foot Buffer Zone are permitted as discussed in the:

"*Town of Needham Wetlands Protection Regulations, Article 6", 2.06 Land Within 100 feet of a Water Body, Waterway, Bank, or Vegetated Wetland (The Buffer Zone):*

*(3) Performance Standards*

*The performance standards listed below are critical to the protection of the Interests of the Bylaw. These include short- and long-term protection of the wildlife habitat capacity and water quality within the adjacent Water Body, Waterway, Bank, or Vegetated Wetland, as well as the wildlife habitat present within the Buffer Zone and adjacent resources.*

*(a) No construction within 25 feet of the limit of Bank or Vegetated Wetland ("The 25-Foot Buffer Zone") may be permitted. Construction is here defined to include (but not limited to) all new roadways, driveways, buildings, decks (except as in (b) below), clearing and grading, stormwater detention basins, and point-source discharges. Any construction within the Buffer Zone must be designed to preserve a minimum of 25 feet of undisturbed natural vegetation and soils adjacent to a Vegetated Wetland or Bank.*

*(b) Work within 25 feet of the limit of Bank or Vegetated wetland may be permitted when the work consists of:*

- *removing existing structures;*
- *planting native tree, shrub, or herbaceous species;*
- *removing invasive plant species and restoring native vegetation;*
- *adding a deck or patio to a dwelling, where no new impervious surfaces are proposed and the work area is existing lawn.*

A Waiver from strict compliance with the Regulations for work within the wetland and 25-foot Buffer Zone to Bordering Vegetated Wetlands is required. The Needham Wetlands Protection Bylaw Regulations, Section 1.11, allows the Commission to consider granting a waiver when, in the judgment of the Commission, the action will serve a substantial public interest and the following criteria are met: (a) there are no practicable alternatives to the proposed action; (b) alteration of the resource area has been minimized to the greatest extent practicable; and (c) compensatory or mitigating measures are taken, even at an off-site location, to protect the public interest in the Protected Resource Area to be removed, filled, dredged, built upon, or altered.

The Commission finds of the proposed work to occur within the 25-foot Buffer Zone that (1) there are no practicable alternatives to the proposed project that will decrease impacts to the resource areas; (2) alterations have been minimized to the maximum extent practicable; and (3) the proposed mitigation planting area within the 25-foot Buffer Zone, removal of existing impervious area from the 25-foot Buffer Zone and installation of stormwater infiltration chambers will contribute to the interests of the Needham Wetlands Protection Bylaw. The Commission therefore grants a Waiver for the proposed work.

The Applicant has requested a Waiver of the Waiver Fee for work located in the 25-foot Buffer Zone. The Commission finds that the Waiver of the Waiver Fee is appropriate.

The Commission finds that the work can be conditioned to protect the Interests of the MA Wetlands Protection Act and the Needham Wetlands Protection Bylaw.

## SPECIAL CONDITIONS:

### GENERAL

1. Except where modified by the following conditions, all work shall be performed in accordance with the plans and the Notice of Intent referenced above.
2. The Needham Conservation Commission and Needham Conservation Department staff reserve the right to enter upon the premises to inspect the work for compliance with the Order of Conditions.
3. The Contractor and/or Applicant may be fined for any applicable non-compliance with the conditions contained herein. This may include a non-criminal penalty of up to $200.00 per day, per violation issued under the Needham Wetlands Protection Bylaw.
4. If any change is intended to be made in the work permitted hereunder, the Applicant shall submit a written request to the Commission with plans that reflect the proposed changes. The Commission shall review said request and plans, and may require the applicant to submit a request for amendment to the Order of Conditions. No changes shall be made prior to said written request to the Commission and approval thereof. Failure to comply with this condition shall be deemed a violation of the Order and may result in the issuance of non-criminal penalties of up to $200 per day.
5. If any change is made, altered or revised without prior approval of the Commission, or if erosion, siltation or other adverse impact to the Resource occurs, the Commission may impose additional conditions as necessary to protect the interests of the Wetlands Protection Act and the Town of Needham Wetlands Protection Bylaw.

### PRE-CONSTRUCTION

6. **Prior to commencing any activity subject to this Order, the Applicant and contractor(s) shall meet with the Conservation Commission or their designee at the project site to review this Order of Conditions. At (or prior to) this meeting the applicant shall submit evidence that this Order has been filed at the Registry of Deeds. At the meeting, the DEP file number sign and erosion control barrier will be available for inspection by the Conservation Commission or their designee. Failure to schedule the pre-construction meeting may results in Enforcement action and fines.**
7. **Prior to installation, a soil test pit shall be excavated in the areas of the proposed system and a certified, competent soils professional shall determine if the areas will adequately infiltrate, as proposed in the application. The certified, competent soils professional shall thereafter submit documentation to the Conservation Commission either verifying that the proposed infiltration area will function as intended or proposing an alternative means to recharge runoff.**
8. A copy of the approved plans, the Notice of Intent, and this Order of Conditions must be provided to the Contractor prior to the commencement of work.
9. Any person performing work on the activity that is the subject of this Order of Conditions is individually responsible for understanding and complying with the requirements of this Order and Needham's Wetlands Protection Bylaw and Regulations. The Applicant must provide the Commission with the name, address, e-mail and telephone number of the person responsible for site supervision and compliance with this Order. Such person shall have authority, among other things, to receive comments from the Conservation Commission and/or their Agent, and to direct any contractor working on the site to take measures to control erosion and sedimentation or otherwise protect the Resource Area, and to order all or any portion of the work to cease.
10. A sign shall be displayed at the site not less than two square feet or more than three square feet in size bearing the words "Massachusetts Department of Environmental Protection (or, "MassDEP") File Number 234-908." Such sign shall be located as to be visible to the public. The sign shall NOT be affixed to a living tree.
11. Erosion controls shall be installed at the limit of work as shown on the approved plan, and in accordance with the manufacturer instructions. Any substitute erosion control barrier must be approved by the

Conservation Commission or their designee prior to installation. Hay bales are not an approved barrier due to the presence of weed seeds. The contractor shall install a protective device within any catch basins that are within 100-feet of the project site. No work may proceed until the Conservation Commission or their Agent has inspected and approved the installation of the erosion control barrier.

12. The Applicant shall notify the Conservation Office at least 3 business days before any work begins (781-455-7550 x 248 or conservation@needhamma.gov).

**CONSTRUCTION**

13. In the event that dewatering is necessary to complete construction in any areas, the Contractor shall provide to the Conservation Department a dewatering plan which specifies means and methods of dewatering, including location of discharge points outside of resource areas.
14. No work, disturbance or alteration shall occur on the Resource Area side of the erosion controls which shall serve as the limit of work. No heavy equipment may operate beyond the limit of work at any time.
15. The Applicant shall remove all silt caught by the erosion control barrier periodically. In no event shall the silt be allowed to collect to a height greater than six inches.
16. The erosion control barrier must be regularly inspected by the Applicant and be continually maintained in good condition until all upgradient areas have been permanently stabilized with vegetation or other approved means and all construction is completed. No erosion controls may be removed without the approval of the Conservation Commission or their designee.
17. At no time shall silt or sediment be allowed to enter the resource area. The Commission must be notified within 24 hours if any silt or sediment enters any resource area or drainage system.
18. No fueling or maintenance of vehicles shall be allowed within the 100-foot Buffer Zone.
19. Any stockpiled soil or similar material must be enclosed within an erosion control barrier or covered by a secured tarp to prevent erosion or siltation into the Resource Area or undisturbed Buffer Zone.
20. No construction materials, debris, leaves, or other materials shall be deposited, intentionally or unintentionally, within Resource Areas or downgradient of the limit of work.
21. In the event that earthwork ceases for more than 30 days, all exposed soils must be stabilized with a temporary vegetative cover, straw mulch, or other method of erosion control accepted by the Massachusetts Department of Environmental Protection.

**PLANTING WORK AND MONITORING**

22. The planting plan submitted by the Applicant includes the installation of eight (8) sweet pepperbush (*Clethra alnifolia*), and eight red osier dogwood (*Cornus sericea*) shrubs, two (2) red maple (*Acer rubrum*) trees a minimum of 2.5" caliper and twenty-five (25) cinnamon fern within a 1,380 square foot area. Plants shall be installed in accordance with the approved planting plan.
23. Required mitigation planting areas within the 25-foot Buffer Zone shall be maintained in perpetuity in their predominantly natural condition (i.e., mowing is prohibited). **This condition shall survive the issuance of a Certificate of Compliance.**
24. The Applicant shall submit notification to the Conservation Department of the mitigation planting work within 30 days of its completion or additional monitoring time may be required before a Certificate of Compliance is issued.
25. Following completion of work, all mitigation plantings shall be monitored for a period of two years. Annual reports documenting the condition of the plantings shall be submitted during each of the two years of required monitoring. The monitoring reports shall document the health of all plantings and document the overall survival rate. For an individual planting to be considered alive, it must be documented to have at least 85% live wood. The name and qualifications of the restoration monitor shall be submitted to the Commission with each annual report. Annual monitoring reports shall be submitted no later than December 1st of each year. Failure to submit annual reports shall constitute a

violation of the Order of Conditions and the Owner of the property shall be subject to enforcement action, including fines in the amount of $200 per day.

26. At the completion of the two-year monitoring period and following submission of the required reports, the Commission will evaluate whether the plantings adequately comply with this Order of Conditions. In order to be considered successful, the plantings shall have a minimum 75% survival rate.

**POST-CONSTRUCTION**

27. An Operation and Maintenance (O&M) Plan must be submitted prior to or with the submission of a Request for Certificate of Compliance and must be signed by the property owner. The O&M Plan shall be followed to maintain the intended post-construction functions and operations of the infiltration chambers.

28. A Certificate of Compliance Request shall be submitted in writing on WPA Form 8A. An As-Built plan showing all structures, grading and plantings, signed and stamped by a Professional Engineer or Registered Land Surveyor, must be submitted to the Commission at the time a Certificate of Compliance is requested. This plan shall be accompanied by a separate certificate signed by a Registered Surveyor or Professional Engineer stating that all work has been completed strictly in accordance with the Order of Conditions. If such work has not been so completed, this Certificate must describe any deviations from the plans as approved by the Commission.

29. It shall be presumed that any work or alteration, which includes, but is not limited to, building, grading, clearing, dumping of leaves or other landscaping debris or other materials, mowing or in any way disturbing the areas protected by the Act and By-law that is inconsistent with, or not specifically authorized by, this Order of Conditions shall require the filing of a new Notice of Intent, and the issuance of an Order of Conditions from the Conservation Commission. **This condition shall survive the issuance of a Certificate of Compliance.**

## Daphne Collins

**From:** John Schlittler
**Sent:** Tuesday, December 5, 2023 11:24 AM
**To:** Daphne Collins
**Subject:** RE: 320 Grove Street - ZBA Administrative Review - Due December 5, 2023 -FINAL

Police has no issues

**From:** Daphne Collins <dcollins@needhamma.gov>
**Sent:** Tuesday, December 5, 2023 9:36 AM
**To:** Joseph Prondak <jprondak@needhamma.gov>; Thomas Ryder <tryder@needhamma.gov>; Tara Gurge <TGurge@needhamma.gov>; John Schlittler <JSchlittler@needhamma.gov>; Tom Conroy <TConroy@needhamma.gov>; Donald Anastasi <DAnastasi@needhamma.gov>; Jay Steeves <steevesj@needhamma.gov>; Ronnie Gavel <rgavel@needhamma.gov>; Deb Anderson <andersond@needhamma.gov>; Clayton Hutchinson <chutchinson@needhamma.gov>
**Subject:** FW: 320 Grove Street - ZBA Administrative Review - Due December 5, 2023 -FINAL

Good Morning All-
Friendly reminder ZBA Administrative Review comments are due today.
Thank you,
Daphne

**Daphne M. Collins**
Zoning Specialist

Phone 781-455-7550, x 261
Web https://www.needhamma.gov/
https://needhamma.gov/1101/Board-of-Appeals
www.needhamma.gov/NeedhamYouTube

Town of Needham
Planning and Community Development
500 Dedham Avenue
Needham, MA 02492

**Regular Office Hours: Mon-Wed 8:00am – 5:00pm**
**Remote Hours: Thurs 8:00am-5:00pm**

**From:** Daphne Collins
**Sent:** Wednesday, November 29, 2023 9:04 PM
**To:** Joseph Prondak <jprondak@needhamma.gov>; Thomas Ryder <tryder@needhamma.gov>; Tara Gurge <TGurge@needhamma.gov>; John Schlittler <JSchlittler@needhamma.gov>; Tom Conroy <TConroy@needhamma.gov>; Donald Anastasi <DAnastasi@needhamma.gov>; Jay Steeves <steevesj@needhamma.gov>; Ronnie Gavel <rgavel@needhamma.gov>; Deb Anderson <andersond@needhamma.gov>; Clayton Hutchinson <chutchinson@needhamma.gov>
**Subject:** FW: 320 Grove Street - ZBA Administrative Review - Due December 5, 2023 -FINAL

Good Evening Folks-
Please use this attached *320 Grove Street – Application AR final* when reviewing and making comments for the ZBA.
The previous version had a draft document.
My apologies for any confusion.

## Daphne Collins

**From:** Tara Gurge
**Sent:** Tuesday, December 5, 2023 11:36 AM
**To:** Daphne Collins
**Subject:** RE: 320 Grove Street - ZBA Administrative Review - Due December 5, 2023 -FINAL

Daphne –

The Public Health Division conducted our Zoning Board review for the property located at **#320 Grove Street.** See comments noted below:

- Prior to the proposed house demolition, the owner must apply for the Public Health Division Demolition review online, via the Towns ViewPoint Cloud online permitting system. See direct link to this permit review application- https://needhamma.viewpointcloud.com/categories/1073/record-types/1006508. This form will need to be completed along with the uploading of the required supplemental report documents for our review and approval (as noted on the form.) **PLEASE NOTE**: Pest control reports, along with the asbestos sampling reports, etc., must be uploaded to our online system for review and approval, prior to the issuance of a Demolition permit by the Building Department.

- On-going pest control must be conducted during demolition AND on-going pest control must be conducted throughout construction.

Please let us know if you have any follow-up questions or if you need any additional information from us on those requirements.

Thanks,

**TARA E. GURGE, R.S., C.E.H.T., M.S.** (she/her/hers)
**ASSISTANT PUBLIC HEALTH DIRECTOR**
**Needham Public Health Division**
**Health and Human Services Department**
**178 Rosemary Street**
**Needham, MA 02494**
**Ph- (781) 455-7940; Ext. 211/Fax- (781) 455-7922**
**Mobile- (781) 883-0127**
**Email - tgurge@needhamma.gov**
**Web- www.needhamma.gov/health**

*please consider the environment before printing this email*

*STATEMENT OF CONFIDENTIALITY*
*This e-mail, including any attached files, may contain confidential and privileged information for the sole use of the intended recipient(s). Any review, use, distribution or disclosure by others is strictly prohibited. If you are not the intended recipient (or authorized to receive information for the recipient), please contact the sender by reply e-mail and delete all copies of this message. Thank you.*

## Daphne Collins

**From:** Tom Conroy
**Sent:** Tuesday, December 5, 2023 3:02 PM
**To:** Daphne Collins
**Subject:** RE: 320 Grove Street - ZBA Administrative Review - Due December 5, 2023 -FINAL

Hi Daphne,
Fire approves.

Thomas M. Conroy
**Fire Chief - Needham Fire Department**
tconroy@needhamma.gov
**Ph (781) 455-7580**

**From:** Daphne Collins <dcollins@needhamma.gov>
**Sent:** Tuesday, December 5, 2023 9:36 AM
**To:** Joseph Prondak <jprondak@needhamma.gov>; Thomas Ryder <tryder@needhamma.gov>; Tara Gurge <TGurge@needhamma.gov>; John Schlittler <JSchlittler@needhamma.gov>; Tom Conroy <TConroy@needhamma.gov>; Donald Anastasi <DAnastasi@needhamma.gov>; Jay Steeves <steevesj@needhamma.gov>; Ronnie Gavel <rgavel@needhamma.gov>; Deb Anderson <andersond@needhamma.gov>; Clayton Hutchinson <chutchinson@needhamma.gov>
**Subject:** FW: 320 Grove Street - ZBA Administrative Review - Due December 5, 2023 -FINAL

Good Morning All-
Friendly reminder ZBA Administrative Review comments are due today.
Thank you,
Daphne

Daphne M. Collins
Zoning Specialist

Phone 781-455-7550, x 261
Web https://www.needhamma.gov/
https://needhamma.gov/1101/Board-of-Appeals
www.needhamma.gov/NeedhamYouTube

Town of Needham
Planning and Community Development
500 Dedham Avenue
Needham, MA 02492

**Regular Office Hours: Mon-Wed 8:00am – 5:00pm**
**Remote Hours: Thurs 8:00am-5:00pm**

**From:** Daphne Collins
**Sent:** Wednesday, November 29, 2023 9:04 PM
**To:** Joseph Prondak <jprondak@needhamma.gov>; Thomas Ryder <tryder@needhamma.gov>; Tara Gurge <TGurge@needhamma.gov>; John Schlittler <JSchlittler@needhamma.gov>; Tom Conroy <TConroy@needhamma.gov>;

Town of Needham
Building Department
500 Dedham Ave.
Needham, MA 02492

*Tel.781-455-7550 x 308*

December 5, 2023

Town of Needham / Zoning Board of Appeals
500 Dedham Ave.
Needham, MA. 02492

Re: Application review for the December Hearing

**320 Grove Street**

Dear Board Members,

The applicants, Corbin Petro and Jessica Gelman are proposing to demolish an existing single-family home and build a new single-family home at their property, 320 Grove Street.

The property lies in an SRA Zoning District. The lot could be considered non-conforming with respect to frontage as the lot fronts in Wellesley with only 79.42 lineal feet of frontage when 150 feet is normally required, although the bylaw is not specific for lots that front in another municipality. The existing home is considered pre-existing, non-conforming with respect to side setbacks of 15 feet on the left side and 20.7' on the right side, when 25' on each side is now required.

This proposal seeks to build this new home at a distance of 17.5 feet from the left side line and 15.3 feet from the right side line. Whereas Section 4.2.3 of the Zoning Bylaw, Table of (dimensional) Regulations requires 25' setbacks from each sideline in the case of new construction, the Building Permit has been denied. The applicants have the right to seek relief in the form of a variance from the Zoning Board of Appeals.

While it has been noted that the applicants stated that this proposal was located on the site with the verbal approval of the prior Building Commissioner, staff and I were unable to find a path to move it forward. Otherwise, this office has no objection to the proposal.

Sincerely,

Joe Prondak
Building Commissioner
Town of Needham

## Daphne Collins

**From:** Tom Conroy
**Sent:** Tuesday, December 5, 2023 3:02 PM
**To:** Daphne Collins
**Subject:** RE: 320 Grove Street - ZBA Administrative Review - Due December 5, 2023 -FINAL

Hi Daphne,
Fire approves.

Thomas M. Conroy
**Fire Chief - Needham Fire Department**
tconroy@needhamma.gov
**Ph (781) 455-7580**

**From:** Daphne Collins <dcollins@needhamma.gov>
**Sent:** Tuesday, December 5, 2023 9:36 AM
**To:** Joseph Prondak <jprondak@needhamma.gov>; Thomas Ryder <tryder@needhamma.gov>; Tara Gurge <TGurge@needhamma.gov>; John Schlittler <JSchlittler@needhamma.gov>; Tom Conroy <TConroy@needhamma.gov>; Donald Anastasi <DAnastasi@needhamma.gov>; Jay Steeves <steevesj@needhamma.gov>; Ronnie Gavel <rgavel@needhamma.gov>; Deb Anderson <andersond@needhamma.gov>; Clayton Hutchinson <chutchinson@needhamma.gov>
**Subject:** FW: 320 Grove Street - ZBA Administrative Review - Due December 5, 2023 -FINAL

Good Morning All-
Friendly reminder ZBA Administrative Review comments are due today.
Thank you,
Daphne

Daphne M. Collins
Zoning Specialist

Phone 781-455-7550, x 261
Web https://www.needhamma.gov/
https://needhamma.gov/1101/Board-of-Appeals
www.needhamma.gov/NeedhamYouTube

Town of Needham
Planning and Community Development
500 Dedham Avenue
Needham, MA 02492

**Regular Office Hours: Mon-Wed 8:00am – 5:00pm**
**Remote Hours: Thurs 8:00am-5:00pm**

**From:** Daphne Collins
**Sent:** Wednesday, November 29, 2023 9:04 PM
**To:** Joseph Prondak <jprondak@needhamma.gov>; Thomas Ryder <tryder@needhamma.gov>; Tara Gurge <TGurge@needhamma.gov>; John Schlittler <JSchlittler@needhamma.gov>; Tom Conroy <TConroy@needhamma.gov>;

## Daphne Collins

**From:** Timothy McDonald
**Sent:** Monday, December 4, 2023 11:12 PM
**To:** Daphne Collins; Howard Goldman
**Cc:** Tara Gurge; Timothy McDonald
**Subject:** RE: 1688 Central Avenue

Hi Howard and Daphne.

The Public Health Division and the Board of Health will provide no further official comments on 1688 Central Avenue.

I will only add that the Public Health Division approved a septic permit for the property on Monday November 20th; the Board of Health was informed of the pending application and did hear an informal presentation from concerned neighbors at its meeting on Friday November 17th but chose to take no action.

At its September meeting, the Board of Health had an extensive discussion about public health legal and regulatory powers and under which circumstances the protection of the public's health trumps something like personal property rights. The gist of that discussion was that if the BOH was to intervene using its regulatory powers, it would do so based upon documentation and evidence (like MA DEP reports or environmental spill notifications, or official write-ups from Needham Fire or Public Health about an on-scene investigation of chemical exposures), not based upon anecdotal reports and old photographs. The BOH's discussion with two legal experts is included in the meeting minutes, available **here**.

If you have questions or want to discuss further, I'm happy to set up a quick call or a Zoom meeting.

Thanks,
TMM

---

Timothy Muir McDonald
*He/Him/His* (What's this?)

Director, Needham Department of Health & Human Services

Rosemary Recreation Complex
178 Rosemary Street
Needham, MA 02494

Public Health Division Office: 781-455-7940
Public Health Division Fax: 781-455-7922
Email: tmcdonald@needhamma.gov

---

Follow Needham Public Health on Twitter!

**From:** Daphne Collins <dcollins@needhamma.gov>
**Sent:** Tuesday, November 21, 2023 4:15 PM
**To:** Howard Goldman <hgoldman@goldmanpease.com>

# Board of Health
# Meeting Minutes
# DRAFT

Date: September 8, 2023

Location: via Zoom

Members: Tejal K. Gandhi, MD, MPH Chair; Kathleen Ward Brown, ScD, Member; Edward Cosgrove, PhD, Member; Robert A. Partridge, MD, MPH, Member; Stephen Epstein, MD, MPP, Member

Staff Present: Tara Gurge, Assistant Director of Public Health; Tiffany (Zike) Benoit, Assistant Director of Public Health; Sainath Palani; Kerry Dunnell; Samantha Menard; Julie McCarthy; Taleb Abdelrahim; Ginnie Chacon-Lopez; Lydia Cunningham; Lynn Schoeff.

Also Present: Cheryl Sbarra, J.D., Executive Director and Senior Staff Attorney (Massachusetts Association of Health Boards); Christopher Heep, Town Counsel; Justin McCullen; and John Portman

**Welcome & Public Comment Period**
Dr. Gandhi called the meeting to order at 9:00AM and initiated a roll call. Present were Dr. Gandhi – Y, Dr. Epstein – Y, Dr. Brown – Y, Dr. Partridge – Y, Dr. Cosgrove – Y.

According to Chapter 107 of the Acts of 2022, as an act relative to extending certain states of emergency accommodations, as passed by the General Court, and signed into law by Acting Governor Karyn Polito, on July 16 2022, revised Section 20 of Chapter 20, the Acts of 2021. In so doing, provided modifications to the Massachusetts Open Meeting Law, which allow for flexibility to hold remote only, and hybrid meetings, while preserving public access and, where appropriate, public participation. Currently, that additional flexibility will expire on March 31, 2025, unless additional legislative action occurs. As part of today's hybrid meeting, all votes will occur via roll call.

Doug Fox requested that the Board consider putting regulations in place for outside dining to allow dogs. There is not a dog park close to downtown, and it would be nice to allow this for owners. This could also be helpful to restaurants. Establishments generally have to apply and show which areas on the site would allow this. Needham currently only allows service dogs.

The Board discussed asking surrounding communities about their experiences.

**Review of Minutes** – (July 14, 2023)
Upon motion duly made by Dr. Cosgrove, and seconded by Dr. Epstein, it was voted to approve the minutes of July 14, 2023, as submitted. Motion passed: Dr. Gandhi – A, Dr. Epstein – A, Dr. Brown – Y, Dr. Partridge – Y, Dr. Cosgrove – Y.

**Legal Discussion of Board of Health Powers**

Town Counsel Christopher Heep explained that the Board has received correspondence regarding environmental testing of 1688 Central Avenue, where there is a proposed childcare facility. This proposal is currently in litigation. He stated that he has not found a clear basis in regulations or statute for the Board to take action on this and require environmental testing. The concerns expressed should be handled by the State. The Planning Board permit has been overturned by the Land Court, including a condition urged to be included by this Board.

Dr. Epstein stated that he would like the Board to take whatever actions it can regarding this item.

Cheryl Sbarra, J.D., Executive Director, and Senior Staff Attorney of the Massachusetts Association of Health Boards stated that she spoke with the Timothy McDonald on this item and the Board can continue to act in its discretionary function. The Board's job is compliance, not punishment. If mitigation is required on this site, 6"-12" of soil cover will likely be needed and the developer is willing to do so. This would lead to compliance.

Dr. Brown stated that she does not believe the Board should continue to pursue this item. The Board previously looked to find an LSP (licensed site professional) to review the developer's work, but no LSP could be found to do the work.

Dr. Epstein asked what will happen if the developer chooses not to add the soil cover. Ms. Sbarra stated that the State could then be contacted to review this.

Holly Clarke, 1652 Central Avenue, expressed concern regarding digging that may occur on the site before the fill is placed. Ms. Clarke said that this site was run as a demolition company for years and there are legitimate concerns from abutters. Evidence has been presented to the Board to show this. The Board of Health should protect the health of Needham and the children who may eventually be using this site. Under Chapter 111, Section 131, the Board of Health can examine to prevent nuisance or source of illness. There is a statutory basis for the Board to continue to look into this item. Ms. Clarke asked the Board to continue to address concerns regarding this property.

Ms. Gurge noted that this property plans to connect to municipal sewer, as long as it is available on the street.

Dr. Gandhi stated that digging on this site appears to be under the jurisdiction of DEP. Staff have spoken to DEP regarding this item. The Board agreed to draft a letter to DEP and the Building Department regarding these concerns.

**Biosafety Committee Introduction**

Justin McCullen and John Portman introduced themselves to the Board as applicants for the resident positions on the Biosafety Committee. The Board thanked the applicants for their interest.

Ms. McCarthy noted that staff have worked to amend the online biosafety permit.

DRAFT

TOWN OF NEEDHAM
MASSACHUSETTS

# BOARD OF APPEALS

## *Appeal of Building Inspector Decision*

***Holly Clark, Gregg Darish, Robert DiMase, Matthew & Nicole Heidenman, Carl Jonasson, Ann & Peter Lyons, and Eileen Sullivan, Appellants***

***Needham Enterprises, LLC, Owner***

***1688 Central Avenue***
***Building Permit #BC-23-10079***
***Map 213, Page 199***
***October 19, 2023***

DRAFT

Holly Clarke, Gregg Darish, Robert DiMase, Matthew and Nicole Heideman, Carl Jonasson, Ann and Peter Lyons, and Eileen Sullivan, appellants, applied to the Board of Appeals for an Appeal of Building Inspector Decision (ABID) of Building Permit BC23-10079 issued to Matt Borrelli and Needham Enterprise LLC dated September 19, 2023, for the construction of a childcare facility at 1688 Central Avenue. The ABID asserts that the Building Permit plans on file do not demonstrate that the construction, alteration or use as proposed complies with the Zoning By Laws, as limited by the Dover Amendment MGL 40A, Section 3. The property is located at 1688 Central Street, Needham, MA in the Single-Residence A (SRA) District. A hybrid public hearing was held in person in the Charles River Room, Public Services Administration Building, 500 Dedham Avenue, Needham, MA, on Thursday, November 16, 2023 at 7:45 p.m and livestreamed on Zoom ID number 869-6475-7241.

***Documents of Record:***

- 1688 Central Avenue, Notice of Appeal Building Permit #BC-23-10079 prepared by C. Dylan Sanders, Beveridge & Diamond, Clerk stamped October 19, 2023.
- Application for Hearing, Clerk stamped October 23, 2023.
- 1688 Central Avenue, Major Project Site Plan Review Decision, Planning Board, March 1, 2022

- Needham Enterprises, LLC v Needham Planning Board, Memorandum of Decision, Commonwealth of Massachusetts, Land Court, Department of the Trial Court, dated August 15, 2023.
- Letter with Exhibits 1-4 from Evans Huber, Frieze Cramer Rosen & Huber, dated November 13, 2023.
- Erosion Control Plans prepared by Glosa Engineering, Inc., stamped by Registered Engineer, dated November 9, 2023.
- Memorandum with Exhibits 1-20 from Appellants submitted November 13, 2023.
- Letter from Joe Prondack, Building Commissioner, dated November 8, 2023.
- Letter from Planning Board, prepared by Lee Newman, Director Planning and Community Development, January 4, 2022.
- Email from Tara Gurge, Assistant Public Health Director, November 7, 2023.
- Emails from Chief Tom Conroy, Fire Department, November 7, 2023.
- Letter from Thomas A. Ryder, Town Engineer, dated November 8, 2023 and email dated November 15, 2023..
- Email from Kimberly Grasso, November 7, 2023.
- Email from Alan Langsner, November 13, 2023.
- Email from Patricia Falcao, November 13, 2023.
- Email from Leon Shaigorodsky, November 12, 2023.
- Email from Meredith Fried, November 13, 2023.
- Email from Karen Langsner, November 13, 2023.
- Email from Robert Onofrey, November 14, 2023.
- Email from Andrea Dannenberg, November 14, 2023.
- Email from Norman MacLeod, November 13, 2023.
- Email from Stanley Keller, November 14, 2023.
- Email from Mike Grasso, November 15, 2023.
- Email from Randy Hammer, November 15, 2023.
- Email from Sally McKechnie, November 15, 2023.
- Email from Robert Dimase, November 16, 2023.
- Letter from Evan Gould, November 13, 2023.
- Email from Dustin Pevear, November 16, 2023.
- Choose Safe Places for Early Care and Education Guidance Manual, April 2017.
- GIS Views of Property 1999, 2009, 2011-12, 2013, 2019.
- Transcript Needham Enterprises, LLC vs. Needham Planning Board, et al., Status Conference before the Honorable Jennifer S. D. Roberts, August 22, 2023.
- Email from Timothy McDonald, Director, Department of Health and Human Services, December 4, 2023.

**<u>November 16, 2023</u>**

Prior to the opening of the Public Hearing, Jonathan D. Tamkin, Chair, recused himself and designated Mr. Goldman to Chair the hearing and appointed Mr. Friedenberg and Ms. Elzon to serve as members. Mr. Tamkin left the meeting and premises at 7:35 p.m.

Mr. Goldman opened the hearing at 7:45 p.m. by reading the public notice.

DRAFT

C. Dylan Sanders, attorney representing the Appellants, noted he represented nine individuals composed of seven families. He identified that all the Appellants are direct abutters or neighbors to the property. He acknowledged that the Appellants agree that a day care facility can be built in this residential area. Their objection are to the issuance of the Building Permit, the design, the siting and bulk of the proposed project in their residential neighborhood. He noted that the neighborhood had concerns about the Planning Board's Site Plan Decision but did not appeal or reject it. They felt the conditions imposed by the Planning Board protected the neighborhood.

Mr. Sanders reported that the Appellants are appealing the Building Inspector's Decision based on the following:

- The issuance of the Building Permit is premature as the project is still the subject of a judicial appeal. The neighbors' appeal is pending in Land Court. The decision of this appeal may be a retrial of the Site Plan Review Decision and may affirm the Planning Board's Decision with all or some of the conditions.
- The project does not have a Site Plan Approval from the Planning Board as required in the By Law.
- The developer is not entitled to a building permit. He may apply for one.
- The project proposes two non-residential buildings on the lot in violation of Section 3.2.1 of the By Law associated with the 4,800 square foot barn.
- The Building Permit did not include a stormwater management plan and erosion control plan required by Section 5.3.2 of the By Law. Mr. Sanders acknowledged that both plans have since been filed. He argued they were insufficient to protect during construction and future uses.
- No landscape plan to provide an at least 25-foot-wide landscape transition and screening between institutional use and residential use was submitted as required by Section 4.2.14 of the By Law.
- There are environmental concerns regarding potential releases of hazardous materials associated with the prior uses at the site which included an excavation company, refuse yard, race cars assembly and repairs, and landscaping company. The Health Department requested a license site professional ("LSP") be engaged to assess the site and provide a report. Mr. Sanders requested that the conditions established in the Site Plan Review be included as part of an amended Building Permit if the permit is not denied.
- Section 5.3.5 of the By Law regarding Traffic studies and mitigation plans conditioned in the Site Plan Review should be included as part of an amended Building Permit. He felt it would be easy to incorporate as the Owner was agreeable to these conditions in the Site Plan Review.
- Section 5.3.4 of the By Law regarding Lighting Mitigation Measures conditioned in the Site Plan Review should be continued if the Building Permit is upheld.

Mr. Sanders said that the project would negatively affect the neighborhood due to the additional traffic generated by the project on an already busy street; the lack of soil and erosion mitigation plan; no conditions to address the environmental concerns during and post construction; the small front setback; the allowance of a second non-residential structure on the lot; and the Building Inspector issuing a Building Permit on a project that is currently under appeal.

DRAFT

Joe Prondak, Building Commissioner, reported that he issued a Building Permit, based on the following and in consultation with the Town Attorney:

- it is not the Town responsibility to curtail the developer from building the project due to a pending appeal. The developer is proceeding at his own risk should the appeal prevail.
- the developer did go through a Site Plan process as required by the Town By Law. The Site Plan was appealed and annulled by the Court.
- The developer has been made aware that the barn can only be used accessory to the childcare facility. Protected by the Dover Amendment, childcare use is permissible in the residential zone and as such it is entitled to an accessory use. There is nothing that limits the size of an accessory structure. If the developer were to use the structure for anything other than accessory to childcare, they would be in violation of the Zoning By Law and the Building Department has authority and remedies to cure that violation. Mr. Friendenberg asked what the mechanism for enforcement was if there was a violation of the accessory use. Mr. Prondak stated he had the enforcement authority to cite the violation with a process in place to bring the violation into compliance.
- The developer submitted a Storm Water Management Plan as required under the Storm Water By Law which showed significant drainage and underground storage in the parking area and hard surface areas of the project. The mandate for the Storm Water By Law is to protect the Charles River from storm water discharge as mandated by the federal Clean Water Act. However, based on the plan there is no runoff to the adjacent properties because of this project.
- The Landscape Plan required under the By Law is not permitted under the Dover Amendment. Open Space is not tied to landscaping. The Dover Amendment only allows for reasonable regulation pertaining to building coverage, bulk, height, parking requirements and open space. Open space refers to non-built areas. Mr. Goldman asked the Building Commissioner what his rationale was for determining that Landscape was different than Open Space. Mr. Prondak responded that Open Space is an area that does contain a building. The By Law was silent on the definition of Open Space.
- There is no Building Department jurisdictional regulations pertaining to contaminations. This is the purview of the Health Department. They reviewed this issue and their concerns were addressed in a condition of the Site Plan Review which was annulled by the Court. Mr. Goldman noted that in materials prepared by the Appellants they indicated that the Health Department had concerns in 2021. Mr. Prondak reported that the Health Department was consulted as part of the Building Permit application process under the Viewpoint Cloud which they approved.
- The Dover Amendment does not allow the inquiry of traffic concerns or mitigations. However, Mr. Prondak did review an independent traffic study for the project which indicated that the drop-off and pick-up was staggered over a two-hour period and there was a queuing lane on the property to accommodate 10 to 12 cars. Mr. Prondak felt that traffic was sufficiently addressed and that that the project did not generated traffic that would significantly impact the flow of traffic.
- The Dover Amendment does not allow for issues regarding lighting. However, lighting spill onto adjacent properties are easily addressed, controlled and remedied if issues come up. Mr. Friedenberg inquired if lighting was included in the plans reviewed. Mr. Prondak

DRAFT

replied that a lighting plan was included but he did not review it.

Ms. Elzon asked if the number of parking was sufficient for the project. Mr. Prondak noted the By Law is silent on the parking number requirement for childcare use. When silent, the By Law allows the Building Inspector to use the recommended parking calculations based on the *ITE Parking Generation Manual, 2nd Edition* which for chilcare is 8 parking spaces plus 1 for every 40 students, plus 1 space each for the of maximum staff on duty. For 115 students and 18 teachers the parking requirement is 29 spaces (8+3+18=29). The project includes 30 on-site spaces which satisfies the requirement of the By Law.

Evans Huber, attorney representing the developer and recipient of the Building Permit, noted that under Section 7.2.1 of the By Law no Building Permit shall be issued until the proposed construction complies with all aspects of the By Law. The only issue before the Board was whether the Building Permit was issued in violation of a specific Town By Law. Appellants need to identify a specific By-Law provision which is being violated.

Mr. Huber argued that the issues of concern by the Appellants are issues addressed by a Site Plan Review which is outside the jurisdiction of the Board and is the sole authority of the Planning Board. The Planning Board conducted a Site Plan Review which Land Court found impermissible.

Mr. Huber disagreed that the project violated Section 5.3.5 of the By Law. This section refers to the protection of pedestrian and vehicular movement *"within the site and egressing from it, through the selection of egress points and provisions for adequate sight distances."* This By Law does not address off site traffic issues such as traffic on Central Avenue, police detail, or changing timing of street lights at intersections.

Mr. Huber noted that the Town By Law under Section 3.2.1, which does not allow for more than one non-residential use on a lot, is not in violation because of the Barn. Consistent with prior Planning Board Decisions, Mr. Huber noted that Temple Beth Shalom and Temple Aliayah house multiple uses – a place of worship and childcare - because they are exempt protected under the Dover Amendment. In both locations, multiple uses on a single lot in a residential area was allowed.

Mr. Friendenberg asked if he thought there was a difference in use and structure. Mr. Huber did not think there was a difference based on the Town's practice and case law, i.e, Petrucci v. Bd of Appeals of Westwood where the Court found the prohibition of multiple uses and buildings impermissible with regard to childcare because of the Dover Amendment.

Mr. Huber noted that the barn qualified under Section 1.3 of the By Law as an accessory structure and use as it will be incidental, subordinate, and customary to the principal use. In court, Pat Day, the Director of the Needham Childcare Center, stated that the current program uses 2,000 square feet of storage space; and Marc Gluesing, architect, stated that the proposed childcare building was designed with minimal storage space because of the barn was going to provide storage for the childcare facility. Nothing in the By Law refers to the size of an accessory building. Both David Roche, the prior Building Commissioner and Mr. Prondak found

DRAFT

the barn not be in violation of the By Law.

Mr. Huber reported the permit complied with the Stormwater By Law Section 5.3.2. The developer submitted a Storm Water Management Plan signed and stamped by a MA Certified Civil Engineer which was found to be in adequate and compliance by the Building Commissioner. This plan was also reviewed by the Engineering Department; and a Town Peer reviewer under the Site Plan Review process.

There was discussion regarding the process where the Appellants could provide evidence of the inadequacy of the Storm Water Management Plan. Mr. Huber said that at a post successful Appeal in Land Court before Land Court. Mr. Huber noted that the Storm Water Management Plan as well as other issues were presented at the Planning Board Site Plan Review public hearings.

Mr. Huber noted that landscaping is not listed as a reasonable area of review under the Dover Amendment therefore it is not a permissible area of regulation under Section 4.2.14.1 of the By Law. He objected that Open Space and Landscaping were the same and concurred with the Building Inspector's definition of Open Space. Mr. Huber reported that the Landscape Plan was reviewed three times and approved by the Design Review Board. Mr. Friedenberg asked what binds the developer to build the Landscape Plan. Mr. Huber responded that the developer intends to build the Landscape Plan as submitted and presented to the Planning Board.

Mr. Goldman asked if there were any objection for the Board to imposed conditions regarding this issue. Mr. Huber said there would be no objections for the Landscape Plan. However, the Board does not have the authority to impose conditions. Mr. Goldman asked if there could be consensus for agreed conditions: landscape plan and erosion control plan. Mr. Huber noted that the developer will be implementing the erosion control plans approved by the Engineering Department.

Mr. Huber reported that the on-site parking provided meets the established Town's parking formula for childcare programs established in Section 5.1.2 of the By Law which is calculated as follows: 8 parking spaces plus 1 for every 40 students, plus 1 space each for the of maximum staff on duty. The program will operate with 115 students and 18 employees, the parking requirement is 29 spaces (8+3+18=29). The project includes 30 on-site spaces which satisfies the requirement of the By Law. GPI, the Town's peer reviewer retained by the Planning Board, noted that the 30 parking spaces were sufficient and more than satisfied the average parking demand established by *ITE Parking Generation Manual, 4th Edition.*

Mr. Huber reported that the building permit meets Section 5.3.4 of the By Law. A Lighting Plan was submitted which meets the requirements, although lighting is not included in the Dover Amendment permissible regulations for review. There will be no light spillage off site.

Mr. Huber noted Town By Law does not require a Construction Management Plan. None was submitted and no By Law was violated.

Regarding contamination, there is no By Law that regulates this. If there are any contaminations,

the avenue for addressing that is through the Mass Department of Environmental Protection (DEP). Mr. Huber did not believe the Board had the authority to revoke the Building Permit based on this.

Mr. Goldman asked if Mr. Huber had any concerns about the hazardous materials at the site with a childcare use. Mr. Huber responded that the developer contracted a Licensed Site Professional (LSP) advise the developer. The LSP determined there was no visible evidence of hazardous materials on site. If volatile organic compounds (VOC) are involved, DEP's remediation is to cap it with an impervious area and any pervious area are to be covered by 12" of clean fill. The developer is planning to cover the pervious areas accessible to the children with 12" of clean fill.

Mr. Goldman inquired if there was a report from the LSP? Mr. Huber said there was no report and that the LSP only provided consultation. Mr. Huber noted that the developer will be capping the impervious area and any pervious area accessible to children are to be covered by 12" of clean fill regardless of the status of the property.

Comments were received from the following:

- The Engineering Department had no issues with the storm water plan and requested an erosion control plan through Viewpoint Cloud. They had no issues with the issuance of the building permit.
- The Fire Department had no issues.
- The Health Department had no further comments on this proposed development.
- The Planning Board had no comment.
- The Building Department denied the request to revoke or suspend the Building Permit #BC-23-10079. (*See Building Commissioner's testimony above*.)
- Karen Lagsner had concerns with environmental and traffic issues.
- Alan Lagsner had concerns with the siting, environmental, traffic and bike safety.
- Robert Onofrey had concerns with contaminations, traffic and front setback.
- Andrea Dannenberg supports the denial of the building permit.
- Norman MacLeod supported the implementation Planning Board's Decision.
- Sharon and Evan Gold had concerns about traffic, pedestrian/bicycle safety and emergency access.
- Mike Grasso had concerns about environmental issues.
- Leonard Shaigorodsky had concerns about traffic.
- Patricia Falco had concerns commercial facility in a residential neighborhood and about traffic.
- Meredith Fried opposed the Building Permit and had concerns about traffic and environmental issues.
- Kim Grasso had traffic concerns.
- Robert DiMase had siting, environmental, traffic concerns, barn, lighting and screening.
- Stanley Keller opposed the issuance of the Building permit without consideration of an Appeal and had concerns about traffic, and pedestrian safety.
- Sally McKechnie opposed the issuance of the Building Permit.
- Randy Hammer opposed the issuance of the Building Permit and had concerns about environmental, traffic and parking.

DRAFT

- Dustin Pevear was concerned about traffic and siting.

The meeting was open to public comments:

Carolyn Reulback, 45 Longfellow Road, associated with the Needham Childcare Center, asked that time limit on how long people talk and courtesy be observed. Mr. Goldman asked how long should the limit be? She proposed a three-minute limit as public comments have been as long as 45 minutes and individuals associated with the Needham Childcare Center were attacked through social media. She was in support of the Building Permit.

Joe Abruzese, 30 Bridle Trail Road, made a presentation regarding setbacks and number of buildings on the site. With the exception of Temple Aliyah, all the uses are residential. Central Avenue is a two lane road without shoulders or sidewalks. He noted that the residential front setbacks in the neighborhood averages 105 feet. Temple Aliyah is setback at 213 feet. He thought the proposed 10,000 square foot building and the 4,000 square foot barn should be setback further than the proposed 64' proposed which meets the minimum 35' front setback for SRA. He proposed an alternative setback of 150' to 200'. He thought providing a larger front setback for the childcare facility would provide for safety and allow for larger driveway for childcare traffic to queue up inside the property instead of waiting on Central Avenue.

Mr. Abruzese challenged that the barn was not originally planned as accessory to the childcare. Mr. Abruzese provided a video clip from a Planning Board Zoom public hearing where Mr. Huber acknowledged that he was unaware of the use limitation of the barn if protection of the Dover Act was sought. Once made aware of this limitation the barn use was limited in support of the childcare use. Mr. Abruzese believed the barn is being used as a pawn to protect the back of the property for a future use. He was in support of a single building, single use setback further on the property. The size to be 10,000 or 12,000 feet. He felt the developed could pursue other option on the site. Mr. Goldman said the jurisdiction of the Board is limited and Mr. Abruzese's vision for the property is beyond the scope of the Board.

Mr. Huber clarified that originally the developer wanted to use the barn for the childcare and for his use. However, in seeking the protection of the Dover Act, the developer agreed that the barn's use would be limited in support of the childcare facility. Under oath, Pat Day and Marc Gluesing testified that the barn will be used in support of the childcare use and for no other purpose.

Nicole Heiderman, 1708 Central Avenue, is the direct abutter to 1688 Central Avenue. She feels that the character of the neighborhood is being negatively affected by having a childcare facility next door. She had concerned about change in her view by the removal of trees, construction site and the childcare. She was concerned about the increase in traffic created by the childcare facility and the safety of her children as the wait for their school bus. She felt a compromise and reasonable restrictions could be arrived at. She was concerned about the environmental impact from the prior uses on the lot and the lack of environmental tests. She was in support of testing. She was also concerned about environmental issues during construction.

Robert Dimase, 1681 Central Avenue, a direct abutter across the street. He was concerned about

DRAFT

the increase in traffic from the childcare use on Central Avenue, the lighting spill from the project and was concerned about the installation of a possible septic system.

Kristy Thompson, 50 Windsor Road, is a neighbor and a researcher in the field of environmental toxicology. She says there is little knowledge on the impact of toxicants on epigenetics. She reported that the neighbors looked at the GIS Mapping data base history of the property based on CDC's *Choose Safe Places for Early Care and Education Manual, April 2017* from 1999 to 2019. These GIS maps indicate auto repair, junk yards, and storage containers at the site which could be sources of contaminations. She was concerned about the disturbed soil from the construction.

Holly Clark, 1652 Central Avenue, is an abutter to Temple Aliyah. She felt that Section 3.2.1 of the By Law which limits one non-residential building permits reasonable review under the Dover Amendment under bulk and open space. She though the Board should consider the Planning Board's Site Plan Review. Mr. Goldman responded that the Land Court has determined the Site Plan Review is null. She disagreed. She thought the barn was outside the Dover Amendment protection and that the By Law was clear about only one non-residential building is allowed. Mr. Goldman asked if her concerns would be alleviated if the two buildings were connected. She thought the density of the property was out of character with the neighborhood. She was concerned about being able to access the south bound lane on Central Avenue with the increase of traffic generated by the childcare program. Ms. Clark reported that the Site Plan Review conditioned traffic mitigation such a timing of traffic lights on Central Avenue, police detail at the driveway, and a traffic study to be conducted after 4 weeks of operation. In addition, there would be an enrollment cap of 115 students to manage traffic and parking concerns. She thought landscaping and lighting was important to mitigating bulk. She'd like to see the lighting and landscaping plans be implemented and for the building to be set back.

Gregg Darish, 43 Country Way, is an abutter. He thought the project will negatively impact the character of the neighborhood. He questioned the intentions of the developer. The Appellants sought legal representation when the Planning Board's attorney said in court he did not represent the abutters. Mr. Darish said the judge told the neighbors that they could plead their case before the Board. Because of all the prior users at the site, he was concerned about the environmental issues. Mr. Darish questioned why a site test recommended by the Board of Health conditioned in the Site Plan Review was no longer necessary. Mr. Friedenberg clarified that the Board was reviewing whether the issued Building Permit was in conformance with zoning, and that there are other Agencies that deal with this issue. Mr. Friedenberg asked if anyone had contacted DEP or asked the Health Department to contact DEP. Mr. Goldman reiterated that the Board's jurisdiction is limited. Mr. Darish urged that the Board suspend the building permit so that testing can be conducted.

Margaret Abruzese, 30 Bridle Trail Road, questioned whether the use of a building is lawful if the use of the building use is not identified in the plan. She provided a transcript of the Status Conference where the judge explained what the intent of her Decision was. She noted that the judge did not agree with Mr. Huber's request for language that would describe the developer as entitled to a building permit rather than entitled to apply for a building permit.

DRAFT

Ms. Abruzese did not think the submitted single page Stormwater and Erosion Control Plans met the Needham By Law requirements.

The zoning By Laws are meant to protect the safety and health of Needham residents therefore mitigation and environmental concerns would be appropriate and should be addressed.

Ms. Abruzese thought governing use and governing configuration are different matters. Having two large buildings on a single lot could be viewed largely as a commercial childcare complex in a residential neighborhood.

Ms. Abruzese thought that the Health Department's Comment that they had no further comments may mean that the have no further comments from the ones they expressed to the Planning Board and they still have those concerns. Ms. Abruzese said they are scheduled to go before the Board of Health on Friday. Mr. Goldman said to take their concerns to the Board of Health and if the Board of Health meant they have concerns to please make those clear and available to the Board.

Mr. Freidenberg moved to continue the Public Hearing to December 14th at 8:00 p.m. in the Charles River Room, Public Services Administration Building, 500 Dedham Avenue, Needham, MA. The meeting with livestreamed on Zoom. Ms. Elzon seconded the motion. The motion was unanimously approved.

The meeting adjourned at 10:30 p.m.

DRAFT